4101:1-7-01 Fire and smoke protection features.

[Comment: When a reference is made within this rule to a federal statutory provision, an industry consensus standard, or any other technical publication, the specific date and title of the publication as well as the name and address of the promulgating agency are listed in rule 4101:1-35-01 of the Administrative Code. The application of the referenced standards shall be limited and as prescribed in section 102.5 of rule 4101:1-1-01 of the Administrative Code.]

SECTION 701
GENERAL

701.1 Scope. The provisions of this chapter shall govern the materials, systems and assemblies used for structural fire resistance and fire-resistance-rated construction separation of adjacent spaces to safeguard against the spread of fire and smoke within a building and the spread of fire to or from buildings.

SECTION 702
DEFINITIONS

702.1 Definitions. The following words and terms shall, for the purposes of this chapter, and as used elsewhere in this code, have the meanings shown herein.

ANNULAR SPACE. The opening around the penetrating item.

BUILDING ELEMENT. A fundamental component of building construction, listed in Table 601, which may or may not be of fire-resistance-rated construction and is constructed of materials based on the building type of construction.

CEILING RADIATION DAMPER. A listed device installed in a ceiling membrane of a fire-resistance-rated floor/ceiling or roof/ceiling assembly to limit automatically the radiative heat transfer through an air inlet/outlet opening.

COMBINATION FIRE/SMOKE DAMPER. A listed device installed in ducts and air transfer openings designed to close automatically upon the detection of heat and resist the passage of flame and smoke. The device is installed to operate automatically, controlled by a smoke detection system, and where required, is capable of being positioned from a fire command center.

COMBUSTIBLE MATERIAL. *Any material not defined as noncombustible.*

DAMPER. See “Ceiling radiation damper,” “Combination fire/smoke damper,” “Fire damper” and “Smoke damper.”

DRAFTSTOP. A material, device or construction installed to restrict the movement of air within open spaces of concealed areas of building components such as crawl spaces, floor/ceiling assemblies, roof/ceiling assemblies and attics.

F RATING. The time period that the through-penetration firestop system limits the spread of fire through the penetration when tested in accordance with ASTM E 814 or UL 1479.

FIRE BARRIER. A fire-resistance-rated wall assembly of materials designed to restrict the spread of fire in which continuity is maintained.

FIRE DAMPER. A listed device installed in ducts and air transfer openings designed to close automatically upon detection of heat and resist the passage of flame. Fire dampers are classified for use in either static systems that will automatically shut down in the event of a fire, or in dynamic systems that continue to operate during a fire. A dynamic fire damper is tested and rated for closure under elevated temperature airflow.

FIRE DOOR. The door component of a fire door assembly.

FIRE DOOR ASSEMBLY. Any combination of a fire door, frame, hardware and other accessories that together provide a specific degree of fire protection to the opening.

FIRE PARTITION. A vertical assembly of materials designed to restrict the spread of fire in which openings are protected.

FIRE PROTECTION RATING. The period of time that an opening protective will maintain the ability to confine a fire as determined by tests prescribed in Section 715. Ratings are stated in hours or minutes.

FIRE RESISTANCE. That property of materials or their assemblies that prevents or retards the passage of excessive heat, hot gases or flames under conditions of use.

FIRE-RESISTANCE RATING. The period of time a building element, component or assembly maintains the ability to confine a fire, continues to

perform a given structural function, or both, as determined by the tests, or the methods based on tests, prescribed in Section 703.

FIRE-RESISTANT JOINT SYSTEM. An assemblage of specific materials or products that are designed, tested and fire-resistance rated in accordance with either ASTM E 1966 or UL 2079 to resist for a prescribed period of time the passage of fire through joints made in or between fire-resistance-rated assemblies.

FIRE SEPARATION DISTANCE. The distance measured from the building face to one of the following:

1. The closest interior lot line;

2. To the centerline of a street, an alley or public way; or

3. To an imaginary line between two buildings on the property.

The distance shall be measured at right angles from the face of the wall.

FIRE WALL. A fire-resistance-rated wall having protected openings, which restricts the spread of fire and extends continuously from the foundation to or through the roof, with sufficient structural stability under fire conditions to allow collapse of construction on either side without collapse of the wall.

FIRE WINDOW ASSEMBLY. A window constructed and glazed to give protection against the passage of fire.

FIREBLOCKING. Building materials or materials for use as fireblocking, installed to resist the free passage of flame to other areas of the building through concealed spaces.

FLOOR FIRE DOOR ASSEMBLY. A combination of a fire door, a frame, hardware and other accessories installed in a horizontal plane, which together provide a specific degree of fire protection to a through-opening in a fire-resistance-rated floor (see Section 712.8).

HORIZONTAL ASSEMBLY. A fire-resistance-rated floor or roof assembly of materials designed to restrict the spread of fire in which continuity is maintained.

JOINT. The linear opening in or between adjacent fire-resistance-rated assemblies that is designed to allow independent movement of the building in any plane caused by thermal, seismic, wind or any other loading.

MEMBRANE PENETRATION. An opening made through one side (wall, floor or ceiling membrane) of an assembly.

MEMBRANE-PENETRATION FIRESTOP. A material, device or construction installed to resist for a prescribed time period the passage of flame and heat through openings in a protective membrane in order to accommodate cables, cable trays, conduit, tubing, pipes or similar items.

MINERAL FIBER. Insulation composed principally of fibers manufactured from rock, slag or glass, with or without binders.

MINERAL WOOL. Synthetic vitreous fiber insulation made by melting predominately igneous rock or furnace slag, and other inorganic materials, and then physically forming the melt into fibers.

NONCOMBUSTIBLE MATERIALS. *Materials that, when tested in accordance with ASTM E 136, have at least three of four specimens tested meeting all of the following criteria:*

The recorded temperature of the surface and interior thermocouples shall not at any time during the test rise more than 54º F (30º C) above the furnace temperature at the beginning of the test.

There shall not be flaming from the specimen after the first thirty seconds.

If the weight loss of the specimen during testing exceeds fifty percent, the recorded temperature of the surface and the interior thermocouples shall not at any time during the test rise above the furnace air temperature at the beginning of the test, and there shall not be flaming of the specimen.

PENETRATION FIRESTOP. A through-penetration firestop or a membrane-penetration firestop.

SELF-CLOSING. As applied to a fire door or other opening protective, means equipped with a device that will ensure closing after having been opened.

SHAFT. An enclosed space extending through one or more stories of a building, connecting vertical openings in successive floors, or floors and roof.

SHAFT ENCLOSURE. The walls or construction forming the boundaries of a shaft.

SMOKE BARRIER. A continuous membrane, either vertical or horizontal, such as a wall, floor or ceiling assembly, that is designed and constructed to restrict the movement of smoke.

SMOKE COMPARTMENT. A space within a building enclosed by smoke barriers on all sides, including the top and bottom.

SMOKE DAMPER. A listed device installed in ducts and air transfer openings designed to resist the passage of smoke. The device is installed to operate automatically, controlled by a smoke detection system, and where required, is capable of being positioned from a fire command center.

SPLICE. The result of a factory and/or field method of joining or connecting two or more lengths of a fire-resistant joint system into a continuous entity.

T RATING. The time period that the penetration firestop system, including the penetrating item, limits the maximum temperature rise to 325°F (163°C) above its initial temperature through the penetration on the nonfire side when tested in accordance with ASTM E 814 or UL 1479.

THROUGH PENETRATION. An opening that passes through an entire assembly.

THROUGH-PENETRATION FIRESTOP SYSTEM. An assemblage of specific materials or products that are designed, tested and fire-resistance rated to resist for a prescribed period of time the spread of fire through penetrations. The F and T rating criteria for penetration firestop systems shall be in accordance with ASTM E 814 or UL 1479. See definitions of "F rating" and "T rating."

SECTION 703
FIRE-RESISTANCE RATINGS AND FIRE TESTS

703.1 Scope. Materials prescribed herein for fire resistance shall conform to the requirements of this chapter.

703.2 Fire-resistance ratings. The fire-resistance rating of building elements, components or assemblies shall be determined in accordance with the test procedures set forth in ASTM E 119 or UL 263 or in accordance with Section 703.3. Where materials, systems or devices that have not been tested as part of a fire-resistance-rated assembly are incorporated into the building element, component or assembly, sufficient data shall be made available to the building official to show that the required fire-resistance rating is not reduced. Materials and methods of construction used to protect joints and penetrations in fire-resistance-rated building elements, components or assemblies shall not reduce the required fire-resistance rating.

Exception: In determining the fire-resistance rating of exterior bearing walls, compliance with the ASTM E 119 or UL 263 criteria for unexposed surface temperature rise and ignition of cotton waste due to passage of flame or gases is required only for a period of time corresponding to the required fire-resistance rating of an exterior nonbearing wall with the same fire separation distance, and in a building of the same group. When the fire-resistance rating determined in accordance with this exception exceeds the fire-resistance rating determined in accordance with ASTM E 119 or UL 263, the fire exposure time period, water pressure and application duration criteria for the hose stream test of ASTM E 119 or UL 263 shall be based upon the fire-resistance rating determined in accordance with this exception.

703.2.1 Nonsymmetrical wall construction. Interior walls and partitions of nonsymmetrical construction shall be tested with both faces exposed to the furnace, and the assigned fire-resistance rating shall be the shortest duration obtained from the two tests conducted in compliance with ASTM E 119 or UL 263. When evidence is furnished to show that the wall was tested with the least fire-resistant side exposed to the furnace, subject to acceptance of the building official, the wall need not be subjected to tests from the opposite side (see Section 705.5 for exterior walls).

703.2.2 Combustible components. Combustible aggregates are permitted in gypsum and portland cement concrete mixtures for fire-resistance-rated construction. Any component material or admixture is permitted in assemblies if the resulting tested assembly meets the fire-resistance test requirements of this code.

703.2.3 Restrained classification. Fire-resistance-rated assemblies tested under ASTM E 119 or UL 263 shall not be considered to be restrained unless evidence satisfactory to the building official is furnished by the registered

design professional showing that the construction qualifies for a restrained classification in accordance with ASTM E 119 or UL 263. Restrained construction shall be identified on the plans.

703.3 Alternative methods for determining fire resistance. The application of any of the alternative methods listed in this section shall be based on the fire exposure and acceptance criteria specified in ASTM E 119 or UL 263. The required fire resistance of a building element, component or assembly shall be permitted to be established by any of the following methods or procedures:

1 Fire-resistance designs documented in *referenced publications approved in accordance with this code*.

2 Prescriptive designs of fire-resistance-rated building elements, components or assemblies as prescribed in Section 720.

3 Calculations in accordance with Section 721.

4 Engineering analysis based on a comparison of building element, component or assemblies designs having fire-resistance ratings as determined by the test procedures set forth in ASTM E 119 or UL 263.

5 Alternative protection methods as allowed by Sections *106.5 or 114.3*.

703.4 Noncombustibility tests. The tests indicated in Sections 703.4.1 and 703.4.2 shall serve as criteria for acceptance of building materials as set forth in Sections 602.2, 602.3 and 602.4 in Type I, II, III and IV construction. The term "noncombustible" does not apply to the flame spread characteristics of interior finish or trim materials. A material shall not be classified as a noncombustible building construction material if it is subject to an increase in combustibility or flame spread beyond the limitations herein established through the effects of age, moisture or other atmospheric conditions.

703.4.1 Elementary materials. Materials required to be noncombustible shall be tested in accordance with ASTM E 136.

703.4.2 Composite materials. Materials having a structural base of noncombustible material as determined in accordance with Section 703.4.1 with a surfacing not more than 0.125 inch (3.18 mm) thick that has a flame spread index not greater than 50 when tested in accordance with ASTM E 84 or UL 723 shall be acceptable as noncombustible materials.

703.5 Fire-resistance-rated glazing. Fire-resistance-rated glazing, when tested in accordance with ASTM E 119 or UL 263 and complying with the requirements of Section 707, shall be permitted. Fire-resistance-rated glazing shall bear a label or other identification showing the name of the manufacturer, the test standard and the identifier "W-XXX," where the "XXX" is the fire-resistance rating in minutes. Such label or identification shall be issued by an *approved* agency and shall be permanently affixed to the glazing.

703.6 *Deleted.*

SECTION 704
FIRE-RESISTANCE RATING OF STRUCTURAL MEMBERS

704.1 Requirements. The fire-resistance ratings of structural members and assemblies shall comply with this section and the requirements for the type of construction as specified in Table 601. The fire-resistance ratings shall not be less than the ratings required for the fire-resistance-rated assemblies supported by the structural members.

> **Exception:** Fire barriers, fire partitions, smoke barriers and horizontal assemblies as provided in Sections 707.5, 709.4, 710.4 and 712.4, respectively.

704.2 Column protection. Where columns are required to be fire-resistance rated, the entire column shall be provided individual encasement protection by protecting it on all sides for the full column length, including connections to other structural members, with materials having the required fire-resistance rating. Where the column extends through a ceiling, the encasement protection shall be continuous from the top of the foundation or floor/ceiling assembly below through the ceiling space to the top of the column.

704.3 Protection of the primary structural frame other than columns. Members of the primary structural frame other than columns that are required to have a fire-resistance rating and support more than two floors or one floor and roof, or support a load-bearing wall or a nonload-bearing wall more than two stories high, shall be provided individual encasement protection by protecting them on all sides for their full length, including connections to other structural members, with materials having the required fire-resistance rating.

Exception: Individual encasement protection on all sides shall be permitted on all exposed sides provided the extent of protection is in accordance with the required fire-resistance rating, as determined in Section 703.

704.4 Protection of secondary members. Secondary members that are required to have a fire-resistance rating shall be protected by individual encasement protection, by the membrane or ceiling of a horizontal assembly in accordance with Section 712, or by a combination of both.

704.4.1 Light-frame construction. King studs and boundary elements that are integral elements in load-bearing walls of light-frame construction shall be permitted to have required fire-resistance ratings provided by the membrane protection provided for the load-bearing wall.

704.5 Truss protection. The required thickness and construction of fire-resistance-rated assemblies enclosing trusses shall be based on the results of full-scale tests or combinations of tests on truss components or on approved calculations based on such tests that satisfactorily demonstrate that the assembly has the required fire resistance.

704.6 Attachments to structural members. The edges of lugs, brackets, rivets and bolt heads attached to structural members shall be permitted to extend to within 1 inch (25 mm) of the surface of the fire protection.

704.7 Reinforcing. Thickness of protection for concrete or masonry reinforcement shall be measured to the outside of the reinforcement except that stirrups and spiral reinforcement ties are permitted to project not more than 0.5-inch (12.7 mm) into the protection.

704.8 Embedments and enclosures. Pipes, wires, conduits, ducts or other service facilities shall not be embedded in the required fire protective covering of a structural member that is required to be individually encased.

704.9 Impact protection. Where the fire protective covering of a structural member is subject to impact damage from moving vehicles, the handling of merchandise or other activity, the fire protective covering shall be protected by corner guards or by a substantial jacket of metal or other noncombustible material to a height adequate to provide full protection, but not less than 5 feet (1524 mm) from the finished floor.

Exception: Corner protection is not required on concrete columns in open or enclosed parking garages.

704.10 Exterior structural members. Load-bearing structural members located within the exterior walls or on the outside of a building or structure shall be provided with the highest fire-resistance rating as determined in accordance with the following:

1 As required by Table 601 for the type of building element based on the type of construction of the building;

2 As required by Table 601 for exterior bearing walls based on the type of construction; and

3 As required by Table 602 for exterior walls based on the fire separation distance.

704.11 Bottom flange protection. Fire protection is not required at the bottom flange of lintels, shelf angles and plates, spanning not more than 6 feet (1829 mm) whether part of the primary structural frame or not, and from the bottom flange of lintels, shelf angles and plates not part of the primary structural frame, regardless of span.

704.12 Seismic isolation systems. Fire-resistance ratings for the isolation system shall meet the fire-resistance rating required for the columns, walls or other structural elements in which the isolation system is installed in accordance with Table 601. Isolation systems required to have a fire-resistance rating shall be protected with approved materials or construction assemblies designed to provide the same degree of fire resistance as the structural element in which it is installed when tested in accordance with ASTM E 119 or UL 263 (see Section 703.2).

Such isolation system protection applied to isolator units shall be capable of retarding the transfer of heat to the isolator unit in such a manner that the required gravity load-carrying capacity of the isolator unit will not be impaired after exposure to the standard time-temperature curve fire test prescribed in ASTM E 119 or UL 263 for a duration not less than that required for the fire-resistance rating of the structure element in which it is installed.

Such isolation system protection applied to isolator units shall be suitably designed and securely installed so as not to dislodge, loosen, sustain damage or otherwise impair its ability to accommodate the seismic movements for which the isolator unit is designed and to maintain its integrity for the purpose of providing the required fire-resistance protection.

704.13 Sprayed fire-resistant materials (SFRM). Sprayed fire-resistant materials (SFRM) shall comply with Sections 704.13.1 through 704.13.5.

704.13.1 Fire-resistance rating. The application of SFRM shall be consistent with the fire-resistance rating and the listing, including, but not limited to, minimum thickness and dry density of the applied SFRM, method of application, substrate surface conditions and the use of bonding adhesives, sealants, reinforcing or other materials.

704.13.2 Manufacturer's installation instructions. The application of SFRM shall be in accordance with the manufacturer's installation instructions. The instructions shall include, but are not limited to, substrate temperatures and surface conditions and SFRM handling, storage, mixing, conveyance, method of application, curing and ventilation.

704.13.3 Substrate condition. The SFRM shall be applied to a substrate in compliance with Sections 704.13.3.1 through 704.13.3.2.

704.13.3.1 Surface conditions. Substrates to receive SFRM shall be free of dirt, oil, grease, release agents, loose scale and any other condition that prevents adhesion. The substrates shall also be free of primers, paints and encapsulants other than those fire tested and listed by a nationally recognized testing agency. Primed, painted or encapsulated steel shall be allowed, provided that testing has demonstrated that required adhesion is maintained.

704.13.3.2 Primers, paints and encapsulants. Where the SFRM is to be applied over primers, paints or encapsulants other than those specified in the listing, the material shall be field tested in accordance with ASTM E 736. Where testing of the SFRM with primers, paints or encapsulants demonstrates that required adhesion is maintained, SFRM shall be permitted to be applied to primed, painted or encapsulated wide flange steel shapes in accordance with the following conditions:

1. The beam flange width does not exceed 12 inches (305 mm); or

2. The column flange width does not exceed 16 inches (400 mm); or

3. The beam or column web depth does not exceed 16 inches (400 mm).

4. The average and minimum bond strength values shall be determined based on a minimum of five bond tests conducted in accordance with ASTM E 736. Bond tests conducted in accordance with ASTM E 736 shall indicate a minimum average bond strength of 80 percent and a minimum individual bond strength of 50 percent, when compared to the bond strength of the SFRM as applied to clean uncoated $^{1}/_{8}$-inch-thick (3-mm) steel plate.

704.13.4 Temperature. A minimum ambient and substrate temperature of 40ºF (4.44ºC) shall be maintained during and for a minimum of 24 hours after the application of the SFRM, unless the manufacturer's installation instructions allow otherwise.

704.13.5 Finished condition. The finished condition of SFRM applied to structural members or assemblies shall not, upon complete drying or curing, exhibit cracks, voids, spalls, delamination or any exposure of the substrate. Surface irregularities of SFRM shall be deemed acceptable.

SECTION 705
EXTERIOR WALLS

705.1 General. Exterior walls shall comply with this section.

705.2 Projections. Cornices, eave overhangs, exterior balconies and similar projections extending beyond the exterior wall shall conform to the requirements of this section and Section 1406. Exterior egress balconies and exterior exit stairways shall also comply with Sections 1019 and 1026, respectively. Projections shall not extend beyond the distance determined by the following three methods, whichever results in the lesser projection:

1 A point one-third the distance from the exterior face of the wall to the lot line where protected openings or a combination of protected and unprotected openings are required in the exterior wall.

2 A point one-half the distance from the exterior face of the wall to the lot line where all openings in the exterior wall are permitted to be unprotected or the building is equipped throughout with an automatic sprinkler system installed under the provisions of Section 705.8.2.

3 More than 12 inches (305 mm) into areas where openings are prohibited.

Buildings on the same lot and considered as portions of one building in accordance with Section 705.3 are not required to comply with this section.

705.2.1 Type I and II construction. Projections from walls of Type I or II construction shall be of noncombustible materials or combustible materials as allowed by Sections 1406.3 and 1406.4.

705.2.2 Type III, IV or V construction. Projections from walls of Type III, IV or V construction shall be of any approved material.

705.2.3 Combustible projections. Combustible projections located where openings are not permitted or where protection of openings is required shall be of at least 1-hour fire-resistance-rated construction, Type IV construction, fire-retardant-treated wood or as required by Section 1406.3.

Exception: Type V construction shall be allowed for R-3 occupancies.

705.3 Buildings on the same lot. For the purposes of determining the required wall and opening protection and roof-covering requirements, buildings on the same lot shall be assumed to have an imaginary line between them.

Where a new building is to be erected on the same lot as an existing building, the location of the assumed imaginary line with relation to the existing building shall be such that the exterior wall and opening protection of the existing building meet the criteria as set forth in Sections 705.5 and 705.8.

Exception: Two or more buildings on the same lot shall either be regulated as separate buildings or shall be considered as portions of one building if the aggregate area of such buildings is within the limits specified in Chapter 5 for a single building. Where the buildings contain different occupancy groups or are of different types of construction, the area shall be that allowed for the most restrictive occupancy or construction.

705.4 Materials. Exterior walls shall be of materials permitted by the building type of construction.

705.5 Fire-resistance ratings. Exterior walls shall be fire-resistance rated in accordance with Tables 601 and 602 and this section. The required fire-resistance rating of exterior walls with a fire separation distance of greater than 10 feet (3048 mm) shall be rated for exposure to fire from the inside. The required fire-resistance rating of exterior walls with a fire separation distance of less than or

equal to 10 feet (3048 mm) shall be rated for exposure to fire from both sides. *Where referenced in section 705, an unoccupied space on an adjoining property may be included in the required fire separation distance, provided that the adjoining property is dedicated or deeded so as to preclude, for the life of the structure, the erection of any building or structure on such space (see section 3781.02 of the Revised Code).*

705.6 Structural stability. The wall shall extend to the height required by Section 705.11 and shall have sufficient structural stability such that it will remain in place for the duration of time indicated by the required fire-resistance rating.

705.7 Unexposed surface temperature. Where protected openings are not limited by Section 705.8, the limitation on the rise of temperature on the unexposed surface of exterior walls as required by ASTM E 119 or UL 263 shall not apply. Where protected openings are limited by Section 705.8, the limitation on the rise of temperature on the unexposed surface of exterior walls as required by ASTM E 119 or UL 263 shall not apply provided that a correction is made for radiation from the unexposed exterior wall surface in accordance with the following formula:

$A_e = A + (A_f \times F_{eo})$ **(Equation 7-1)**

where:

A_e = Equivalent area of protected openings.
A = Actual area of protected openings.
A_f = Area of exterior wall surface in the story under consideration exclusive of openings, on which the temperature limitations of ASTM E 119 or UL 263 for walls are exceeded.
F_{eo} = An "equivalent opening factor" derived from Figure 705.7 based on the average temperature of the unexposed wall surface and the fire-resistance rating of the wall.

705.8 Openings. Openings in exterior walls shall comply with Sections 705.8.1 through 705.8.6.

705.8.1 Allowable area of openings. The maximum area of unprotected and protected openings permitted in an exterior wall in any story of a building shall not exceed the percentages specified in Table 705.8.

Exceptions:

1. In other than Group H occupancies, unlimited unprotected openings are permitted in the first story above grade either:

    1.1. Where the wall faces a street and has a fire separation distance of more than 15 feet (4572 mm); or

    1.2 Where the wall faces an unoccupied space. The unoccupied space shall be on the same lot or dedicated for public use, shall not be less than 30 feet (9144 mm) in width and shall have access from a street by a posted fire lane in accordance with the *fire code*.

2. Buildings whose exterior bearing walls, exterior nonbearing walls and exterior primary structural frame are not required to be fire-resistance rated shall be permitted to have unlimited unprotected openings.

705.8.2 Protected openings. Where openings are required to be protected, fire doors and fire shutters shall comply with Section 715.4 and fire window assemblies shall comply with Section 715.5.

Exception: Opening protectives are not required where the building is equipped throughout with an automatic sprinkler system in accordance with Section 903.3.1.1 and the exterior openings are protected by a water curtain using automatic sprinklers approved for that use.

705.8.3 Unprotected openings. Where unprotected openings are permitted, windows and doors shall be constructed of any approved materials. Glazing shall conform to the requirements of Chapters 24 and 26.

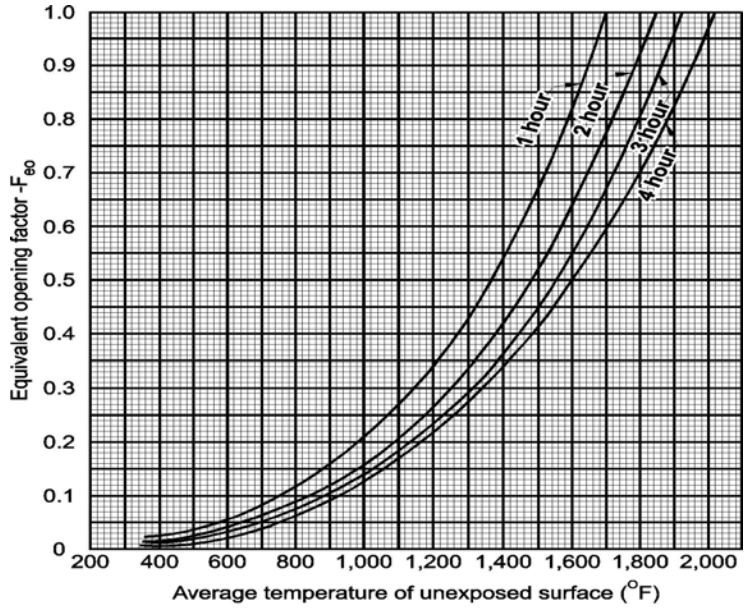

For SI: °C = [(°F) - 32] / 1.8.

TABLE 705.8
MAXIMUM AREA OF EXTERIOR WALL OPENINGS BASED ON FIRE SEPARATION DISTANCE AND DEGREE OF OPENING PROTECTION

FIRE SEPARATION DISTANCE (feet)	DEGREE OF OPENING PROTECTION	ALLOWABLE AREA[a]
0 to less than 3[b, c]	Unprotected, Nonsprinklered (UP, NS)	Not Permitted
	Unprotected, Sprinklered (UP, S)[i]	Not Permitted
	Protected (P)	Not Permitted
3 to less than 5[d, e]	Unprotected, Nonsprinklered (UP, NS)	Not Permitted
	Unprotected, Sprinklered (UP, S)[i]	15%
	Protected (P)	15%
5 to less than 10[e, f]	Unprotected, Nonsprinklered (UP, NS)	10%[h]
	Unprotected, Sprinklered (UP, S)[i]	25%
	Protected (P)	25%
10 to less than 15[e, f, g]	Unprotected, Nonsprinklered (UP, NS)	15%[h]
	Unprotected, Sprinklered (UP, S)[i]	45%

	Protected (P)	45%
15 to less than 20[f, g]	Unprotected, Nonsprinklered (UP, NS)	25%
	Unprotected, Sprinklered (UP, S)[i]	75%
	Protected (P)	75%
20 to less than 25[f, g]	Unprotected, Nonsprinklered (UP, NS)	45%
	Unprotected, Sprinklered (UP, S)[i]	No Limit
	Protected (P)	No Limit
25 to less than 30[f, g]	Unprotected, Nonsprinklered (UP, NS)	70%
	Unprotected, Sprinklered (UP, S)[i]	No Limit
	Protected (P)	No Limit
30 or greater	Unprotected, Nonsprinklered (UP, NS)	No Limit
	Unprotected, Sprinklered (UP, S)[i]	Not Required
	Protected (P)	Not Required

For SI: 1 foot = 304.8 mm.
UP, NS = Unprotected openings in buildings not equipped throughout with an automatic sprinkler system in accordance with Section 903.3.1.1.
UP, S = Unprotected openings in buildings equipped throughout with an automatic sprinkler system in accordance with Section 903.3.1.1.
P = Openings protected with an opening protective assembly in accordance with Section 705.8.2.
a. Values indicated are the percentage of the area of the exterior wall, per story.
b. For the requirements for fire walls of buildings with differing heights, see Section 706.6.1.
c. For openings in a fire wall for buildings on the same lot, see Section 706.8.
d. The maximum percentage of unprotected and protected openings shall be 25 percent for Group R-3 occupancies.
e. Unprotected openings shall not be permitted for openings with a fire separation distance of less than 15 feet for Group H-2 and H-3 occupancies.
f. The area of unprotected and protected openings shall not be limited for Group R-3 occupancies, with a fire separation distance of 5 feet or greater.
g. The area of openings in an open parking structure with a fire separation distance of 10 feet or greater shall not be limited.
h. Includes buildings accessory to Group R-3.
i. Not applicable to Group H-1, H-2 and H-3 occupancies.

705.8.4 Mixed openings. Where both unprotected and protected openings are located in the exterior wall in any story of a building, the total area of openings shall be determined in accordance with the following:

$$(A_p/a_p) + (A_u/a_u) \leq 1 \qquad \textbf{(Equation 7-2)}$$

where:

A_p = Actual area of protected openings, or the equivalent

area of protected openings, A_e (see Section 705.7).
a_p = Allowable area of protected openings.
A_u = Actual area of unprotected openings.
a_u = Allowable area of unprotected openings.

705.8.5 Vertical separation of openings. Openings in exterior walls in adjacent stories shall be separated vertically to protect against fire spread on the exterior of the buildings where the openings are within 5 feet (1524 mm) of each other horizontally and the opening in the lower story is not a protected opening with a fire protection rating of not less than ¾ hour. Such openings shall be separated vertically at least 3 feet (914 mm) by spandrel girders, exterior walls or other similar assemblies that have a fire-resistance rating of at least 1 hour or by flame barriers that extend horizontally at least 30 inches (762 mm) beyond the exterior wall. Flame barriers shall also have a fire-resistance rating of at least 1 hour. The unexposed surface temperature limitations specified in ASTM E 119 or UL 263 shall not apply to the flame barriers or vertical separation unless otherwise required by the provisions of this code.

Exceptions:

1 This section shall not apply to buildings that are three stories or less above grade plane.

2 This section shall not apply to buildings equipped throughout with an automatic sprinkler system in accordance with Section 903.3.1.1 or 903.3.1.2.

3 Open parking garages.

705.8.6 Vertical exposure. For buildings on the same lot, opening protectives having a fire protection rating of not less than ¾ hour shall be provided in every opening that is less than 15 feet (4572 mm) vertically above the roof of an adjacent building or structure based on assuming an imaginary line between them. The opening protectives are required where the fire separation distance between the imaginary line and the adjacent building or structure is less than 15 feet (4572 mm).

Exceptions:

1 Opening protectives are not required where the roof assembly of

the adjacent building or structure has a fire-resistance rating of not less than 1 hour for a minimum distance of 10 feet (3048 mm) from the exterior wall facing the imaginary line and the entire length and span of the supporting elements for the fire-resistance-rated roof assembly has a fire-resistance rating of not less than 1 hour.

2 Buildings on the same lot and considered as portions of one building in accordance with .Section 705.3 are not required to comply with Section 705.8.6.

705.9 Joints. Joints made in or between exterior walls required by this section to have a fire-resistance rating shall comply with Section 714.

Exception: Joints in exterior walls that are permitted to have unprotected openings.

705.9.1 Voids. The void created at the intersection of a floor/ceiling assembly and an exterior curtain wall assembly shall be protected in accordance with Section 714.4.

705.10 Ducts and air transfer openings. Penetrations by air ducts and air transfer openings in fire-resistance-rated exterior walls required to have protected openings shall comply with Section 716.

Exception: Foundation vents installed in accordance with this code are permitted.

705.11 Parapets. Parapets shall be provided on exterior walls of buildings.

Exceptions: A parapet need not be provided on an exterior wall where any of the following conditions exist:

1 The wall is not required to be fire-resistance rated in accordance with Table 602 because of fire separation distance.

2 The building has an area of not more than 1,000 square feet (93 m^2) on any floor.

3 Walls that terminate at roofs of not less than 2-hour fire-resistance-rated construction or where the roof, including the deck or slab and

supporting construction, is constructed entirely of noncombustible materials.

4 One-hour fire-resistance-rated exterior walls that terminate at the underside of the roof sheathing, deck or slab, provided:

4.1. Where the roof/ceiling framing elements are parallel to the walls, such framing and elements supporting such framing shall not be of less than 1-hour fire-resistance-rated construction for a width of 4 feet (1220 mm) for Groups R and U and 10 feet (3048 mm) for other occupancies, measured from the interior side of the wall.

4.2. Where roof/ceiling framing elements are not parallel to the wall, the entire span of such framing and elements supporting such framing shall not be of less than 1-hour fire-resistance-rated construction.

4.3. Openings in the roof shall not be located within 5 feet (1524 mm) of the 1-hour fire-resistance-rated exterior wall for Groups R and U and 10 feet (3048 mm) for other occupancies, measured from the interior side of the wall.

4.4. The entire building shall be provided with not less than a Class B roof covering.

5. In Groups R-2 and R-3 where the entire building is provided with a Class C roof covering, the exterior wall shall be permitted to terminate at the underside of the roof sheathing or deck in Type III, IV and V construction, provided:

5.1. The roof sheathing or deck is constructed of approved noncombustible materials or of fire-retardant-treated wood for a distance of 4 feet (1220 mm); or

5.2. The roof is protected with 0.625-inch (16 mm) Type X gypsum board directly beneath the underside of the roof sheathing or deck, supported by a minimum of nominal 2-inch (51 mm) ledgers attached to the sides of the roof framing members for a minimum distance of 4 feet (1220 mm).

6 Where the wall is permitted to have at least 25 percent of the exterior wall areas containing unprotected openings based on fire separation

distance as determined in accordance with Section 705.8.

705.11.1 Parapet construction. Parapets shall have the same fire-resistance rating as that required for the supporting wall, and on any side adjacent to a roof surface, shall have noncombustible faces for the uppermost 18 inches (457 mm), including counterflashing and coping materials. The height of the parapet shall not be less than 30 inches (762 mm) above the point where the roof surface and the wall intersect. Where the roof slopes toward a parapet at a slope greater than two units vertical in 12 units horizontal (16.7-percent slope), the parapet shall extend to the same height as any portion of the roof within a fire separation distance where protection of wall openings is required, but in no case shall the height be less than 30 inches (762 mm).

SECTION 706
FIRE WALLS

706.1 General. Each portion of a building separated by one or more fire walls that comply with the provisions of this section shall be considered a separate building. The extent and location of such fire walls shall provide a complete separation. Where a fire wall also separates occupancies that are required to be separated by a fire barrier wall, the most restrictive requirements of each separation shall apply.

706.1.1 Party walls. Any wall located on a lot line between adjacent buildings, which is used or adapted for joint service between the two buildings, shall be constructed as a fire wall in accordance with Section 706. Party walls shall be constructed without openings and shall create separate buildings.

Exception: Openings in a party wall separating an anchor building and a mall shall be in accordance with Section 402.7.3.1.

706.2 Structural stability. Fire walls shall have sufficient structural stability under fire conditions to allow collapse of construction on either side without collapse of the wall for the duration of time indicated by the required fire-resistance rating *or shall be constructed as double fire walls in accordance with NFPA 221.*

706.3 Materials. Fire walls shall be of any approved noncombustible materials.

Exception: Buildings of Type V construction.

706.4 Fire-resistance rating. Fire walls shall have a fire-resistance rating of not less than that required by Table 706.4.

TABLE 706.4
FIRE WALL FIRE-RESISTANCE RATINGS

GROUP	FIRE-RESISTANCE RATING (hours)
A, B, E, H-4, I, R-1, R-2, U	3[a]
F-1, H-3[b], H-5, M, S-1	3
H-1, H-2	4[b]
F-2, S-2, R-3, R-4	2

a. In Type II or V construction, walls shall be permitted to have a 2-hour fire-resistance rating.
b. For Group H-1, H-2 or H-3 buildings, also see Sections 415.4 and 415.5.

706.5 Horizontal continuity. Fire walls shall be continuous from exterior wall to exterior wall and shall extend at least 18 inches (457 mm) beyond the exterior surface of exterior walls.

Exceptions:

1 Fire walls shall be permitted to terminate at the interior surface of combustible exterior sheathing or siding provided the exterior wall has a fire-resistance rating of at least 1 hour for a horizontal distance of at least 4 feet (1220 mm) on both sides of the fire wall. Openings within such exterior walls shall be protected by opening protectives having a fire protection rating of not less than ¾ hour.

2 Fire walls shall be permitted to terminate at the interior surface of noncombustible exterior sheathing, exterior siding or other noncombustible exterior finishes provided the sheathing, siding, or other exterior noncombustible finish extends a horizontal distance of at least 4 feet (1220 mm) on both sides of the fire wall.

3 Fire walls shall be permitted to terminate at the interior surface of noncombustible exterior sheathing where the building on each side of the fire wall is protected by an automatic sprinkler system installed in accordance with Section 903.3.1.1 or 903.3.1.2.

706.5.1 Exterior walls. Where the fire wall intersects exterior walls, the fire-resistance rating and opening protection of the exterior walls shall comply with one of the following:

1. The exterior walls on both sides of the fire wall shall have a 1-hour fire-resistance rating with ¾ -hour protection where opening protection is required by Section 705.8. The fire-resistance rating of the exterior wall shall extend a minimum of 4 feet (1220 mm) on each side of the intersection of the fire wall to exterior wall. Exterior wall intersections at fire walls that form an angle equal to or greater than 180 degrees (3.14 rad) do not need exterior wall protection.

2. Buildings or spaces on both sides of the intersecting fire wall shall assume to have an imaginary lot line at the fire wall and extending beyond the exterior of the fire wall. The location of the assumed line in relation to the exterior walls and the fire wall shall be such that the exterior wall and opening protection meet the requirements set forth in Sections 705.5 and 705.8. Such protection is not required for exterior walls terminating at fire walls that form an angle equal to or greater than 180 degrees (3.14 rad).

706.5.2 Horizontal projecting elements. Fire walls shall extend to the outer edge of horizontal projecting elements such as balconies, roof overhangs, canopies, marquees and similar projections that are within 4 feet (1220 mm) of the fire wall.

Exceptions:

1. Horizontal projecting elements without concealed spaces, provided the exterior wall behind and below the projecting element has not less than 1-hour fire-resistance-rated construction for a distance not less than the depth of the projecting element on both sides of the fire wall. Openings within such exterior walls shall be protected by opening protectives having a fire protection rating of not less than ¾ hour.

2. Noncombustible horizontal projecting elements with concealed spaces, provided a minimum 1-hour fire-resistance-rated wall extends through the concealed space. The projecting element shall be separated from the building by a minimum of 1-hour fire-resistance-rated construction for a distance on each side of the fire

wall equal to the depth of the projecting element. The wall is not required to extend under the projecting element where the building exterior wall is not less than 1-hour fire-resistance rated for a distance on each side of the fire wall equal to the depth of the projecting element. Openings within such exterior walls shall be protected by opening protectives having a fire protection rating of not less than ¾ hour.

3. For combustible horizontal projecting elements with concealed spaces, the fire wall need only extend through the concealed space to the outer edges of the projecting elements. The exterior wall behind and below the projecting element shall be of not less than 1-hour fire-resistance-rated construction for a distance not less than the depth of the projecting elements on both sides of the fire wall. Openings within such exterior walls shall be protected by opening protectives having a fire-protection rating of not less than ¾ hour.

706.6 Vertical continuity. Fire walls shall extend from the foundation to a termination point at least 30 inches (762 mm) above both adjacent roofs.

Exceptions:

1. Stepped buildings in accordance with Section 706.6.1.

2. Two-hour fire-resistance-rated walls shall be permitted to terminate at the underside of the roof sheathing, deck or slab, provided:

   2.1. The lower roof assembly within 4 feet (1220 mm) of the wall has not less than a 1-hour fire-resistance rating and the entire length and span of supporting elements for the rated roof assembly has a fire-resistance rating of not less than 1 hour.

   2.2. Openings in the roof shall not be located within 4 feet (1220 mm) of the fire wall.

   2.3. Each building shall be provided with not less than a Class B roof covering.

3. Walls shall be permitted to terminate at the underside of noncombustible roof sheathing, deck or slabs where both buildings are

provided with not less than a Class B roof covering. Openings in the roof shall not be located within 4 feet (1220 mm) of the fire wall.

4. In buildings of Type III, IV and V construction, walls shall be permitted to terminate at the underside of combustible roof sheathing or decks, provided:

   4.1. There are no openings in the roof within 4 feet (1220 mm) of the fire wall,

   4.2. The roof is covered with a minimum Class B roof covering, and

   4.3. The roof sheathing or deck is constructed of fire-retardant-treated wood for a distance of 4 feet (1220 mm) on both sides of the wall or the roof is protected with $^{5}/_{8}$-inch (15.9 mm) Type X gypsum board directly beneath the underside of the roof sheathing or deck, supported by a minimum of 2-inch (51 mm) nominal ledgers attached to the sides of the roof framing members for a minimum distance of 4 feet (1220 mm) on both sides of the fire wall.

5. In buildings designed in accordance with Section 509.2, fire walls located above the 3-hour horizontal assembly required by Section 509.2, Item 1 *above* shall be permitted to extend from the top of this horizontal assembly.

706.6.1 Stepped buildings. Where a fire wall serves as an exterior wall for a building and separates buildings having different roof levels, such wall shall terminate at a point not less than 30 inches (762 mm) above the lower roof level, provided the exterior wall for a height of 15 feet (4572 mm) above the lower roof is not less than 1-hour fire-resistance-rated construction from both sides with openings protected by fire assemblies having a fire protection rating of not less than ¾ hour.

Exception: Where the fire wall terminates at the underside of the roof sheathing, deck or slab of the lower roof, provided:

1. The lower roof assembly within 10 feet (3048 mm) of the wall has not less than a 1-hour fire-resistance rating and the entire length and span of supporting elements for the rated roof assembly has a fire-resistance rating of not less than 1 hour.

2. Openings in the lower roof shall not be located within 10 feet (3048 mm) of the fire wall.

706.7 Combustible framing in fire walls. Adjacent combustible members entering into a concrete or masonry fire wall from opposite sides shall not have less than a 4-inch (102 mm) distance between embedded ends. Where combustible members frame into hollow walls or walls of hollow units, hollow spaces shall be solidly filled for the full thickness of the wall and for a distance not less than 4 inches (102 mm) above, below and between the structural members, with noncombustible materials approved for fireblocking.

706.8 Openings. Each opening through a fire wall shall be protected in accordance with Section 715.4 and shall not exceed 156 square feet (15 m2). The aggregate width of openings at any floor level shall not exceed 25 percent of the length of the wall.

Exceptions:

1 Openings are not permitted in party walls constructed in accordance with Section 706.1.1.

2 Openings shall not be limited to 156 square feet (15 m^2) where both buildings are equipped throughout with an automatic sprinkler system installed in accordance with Section 903.3.1.1.

706.9 Penetrations. Penetrations of fire walls shall comply with Section 713.

706.10 Joints. Joints made in or between fire walls shall comply with Section 714.

706.11 Ducts and air transfer openings. Ducts and air transfer openings shall not penetrate fire walls.

Exception: Penetrations by ducts and air transfer openings of fire walls that are not on a lot line shall be allowed provided the penetrations comply with Section 716. The size and aggregate width of all openings shall not exceed the limitations of Section 706.8.

SECTION 707
FIRE BARRIERS

707.1 General. Fire barriers installed as required elsewhere in this code or the *fire code* shall comply with this section.

707.2 Materials. Fire barriers shall be of materials permitted by the building type of construction.

707.3 Fire-resistance rating. The fire-resistance rating of fire barriers shall comply with this section.

707.3.1 Shaft enclosures. The fire-resistance rating of the fire barrier separating building areas from a shaft shall comply with Section 708.4.

707.3.2 Exit enclosures. The fire-resistance rating of the fire barrier separating building areas from an exit shall comply with Section 1022.1.

707.3.3 Exit passageway. The fire-resistance rating of the fire barrier separating building areas from an exit passageway shall comply with Section 1023.3.

707.3.4 Horizontal exit. The fire-resistance rating of the separation between building areas connected by a horizontal exit shall comply with Section 1025.1.

707.3.5 Atriums. The fire-resistance rating of the fire barrier separating atriums shall comply with Section 404.6.

707.3.6 Incidental accessory occupancies. The fire barrier separating incidental accessory occupancies from other spaces in the building shall have a fire-resistance rating of not less than that indicated in Table 508.2.5.

707.3.7 Control areas. Fire barriers separating control areas shall have a fire-resistance rating of not less than that required in Section 414.2.4.

707.3.8 Separated occupancies. Where the provisions of Section 508.4 are applicable, the fire barrier separating mixed occupancies shall have a fire-resistance rating of not less than that indicated in Table 508.4 based on the occupancies being separated.

707.3.9 Fire areas. The fire barriers or horizontal assemblies, or both, separating a single occupancy into different fire areas shall have a fire-resistance rating of not less than that indicated in Table 707.3.9. The fire barriers or horizontal assemblies, or both, separating fire areas of mixed occupancies shall have a fire-resistance rating of not less than the highest value indicated in Table 707.3.9 for the occupancies under consideration.

TABLE 707.3.9
FIRE-RESISTANCE RATING REQUIREMENTS FOR FIRE BARRIER ASSEMBLIES OR HORIZONTAL ASSEMBLIES BETWEEN FIRE AREAS

OCCUPANCY GROUP	FIRE-RESISTANCE RATING (hours)
H-1, H-2	4
F-1, H-3, S-1	3
A, B, E, F-2, H-4, H-5, I, M, R, S-2	2
U	1

707.4 Exterior walls. Where exterior walls serve as a part of a required fire-resistance-rated shaft or exit enclosure, or separation, such walls shall comply with the requirements of Section 705 for exterior walls and the fire-resistance-rated enclosure or separation requirements shall not apply.

Exception: Exterior walls required to be fire-resistance rated in accordance with Section 1019 for exterior egress balconies, Section 1022.6 for exit enclosures and Section 1026.6 for exterior exit ramps and stairways.

707.5 Continuity. Fire barriers shall extend from the top of the floor/ceiling assembly below to the underside of the floor or roof sheathing, slab or deck above and shall be securely attached thereto. Such fire barriers shall be continuous through concealed spaces, such as the space above a suspended ceiling.

707.5.1 Supporting construction. The supporting construction for a fire barrier shall be protected to afford the required fire-resistance rating of the fire barrier supported. Hollow vertical spaces within a fire barrier shall be fireblocked in accordance with Section 717.2 at every floor level.

Exceptions:

1 The maximum required fire-resistance rating for assemblies

supporting fire barriers separating tank storage as provided for in Section 415.6.2.1 shall be 2 hours, but not less than required by Table 601 for the building construction type.

2 Shaft enclosures shall be permitted to terminate at a top enclosure complying with Section 708.12.

3 Supporting construction for 1-hour fire barriers required by Table 508.2.5 in buildings of Type IIB, IIIB and VB construction is not required to be fire-resistance rated unless required by other sections of this code.

707.6 Openings. Openings in a fire barrier shall be protected in accordance with Section 715. Openings shall be limited to a maximum aggregate width of 25 percent of the length of the wall, and the maximum area of any single opening shall not exceed 156 square feet (15 m2). Openings in exit enclosures and exit passageways shall also comply with Sections 1022.3 and 1023.5, respectively.

Exceptions:

1 Openings shall not be limited to 156 square feet (15 m^2) where adjoining floor areas are equipped throughout with an automatic sprinkler system in accordance with Section 903.3.1.1.

2 Openings shall not be limited to 156 square feet (15 m^2) or an aggregate width of 25 percent of the length of the wall where the opening protective is a fire door serving an exit enclosure.

3 Openings shall not be limited to 156 square feet (15 m^2) or an aggregate width of 25 percent of the length of the wall where the opening protective has been tested in accordance with ASTM E 119 or UL 263 and has a minimum fire-resistance rating not less than the fire-resistance rating of the wall.

4 Fire window assemblies permitted in atrium separation walls shall not be limited to a maximum aggregate width of 25 percent of the length of the wall.

5 Openings shall not be limited to 156 square feet (15 m^2) or an aggregate width of 25 percent of the length of the wall where the opening protective is a fire door assembly in a fire barrier separating

an exit enclosure from an exit passageway in accordance with Section 1022.2.1.

707.7 Penetrations. Penetrations of fire barriers shall comply with Section 713.

707.7.1 Prohibited penetrations. Penetrations into an exit enclosure or an exit passageway shall be allowed only when permitted by Section 1022.4 or 1023.6, respectively.

707.8 Joints. Joints made in or between fire barriers, and joints made at the intersection of fire barriers with underside of the floor or roof sheathing, slab or deck above, shall comply with Section 714.

707.9 Ducts and air transfer openings. Penetrations in a fire barrier by ducts and air transfer openings shall comply with Section 716.

SECTION 708
SHAFT ENCLOSURES

708.1 General. The provisions of this section shall apply to shafts required to protect openings and penetrations through floor/ceiling and roof/ceiling assemblies. Shaft enclosures shall be constructed as fire barriers in accordance with Section 707 or horizontal assemblies in accordance with Section 712, or both.

708.2 Shaft enclosure required. Openings through a floor/ceiling assembly shall be protected by a shaft enclosure complying with this section.

Exceptions:

1 A shaft enclosure is not required for openings totally within an individual residential dwelling unit and connecting four stories or less.

2 A shaft enclosure is not required in a building equipped throughout with an automatic sprinkler system in accordance with Section 903.3.1.1 for an escalator opening or stairway that is not a portion of the means of egress protected according to Item 2.1 or 2.2.

2.1. Where the area of the floor opening between stories does not exceed twice the horizontal projected area of the escalator or

stairway and the opening is protected by a draft curtain and closely spaced sprinklers in accordance with NFPA 13. In other than Groups B and M, this application is limited to openings that do not connect more than four stories.

2.2. Where the opening is protected by approved power-operated automatic shutters at every penetrated floor. The shutters shall be of noncombustible construction and have a fire-resistance rating of not less than 1.5 hours. The shutter shall be so constructed as to close immediately upon the actuation of a smoke detector installed in accordance with Section 907.3 and shall completely shut off the well opening. Escalators shall cease operation when the shutter begins to close. The shutter shall operate at a speed of not more than 30 feet per minute (152.4 mm/s) and shall be equipped with a sensitive leading edge to arrest its progress where in contact with any obstacle, and to continue its progress on release therefrom.

3. A shaft enclosure is not required for penetrations by pipe, tube, conduit, wire, cable and vents protected in accordance with Section 713.4.

4. A shaft enclosure is not required for penetrations by ducts protected in accordance with Section 716.6. Grease ducts shall be protected in accordance with the *mechanical code*.

5. In other than Group H occupancies, a shaft enclosure is not required for floor openings complying with the provisions for atriums in Section 404.

6. A shaft enclosure is not required for approved masonry chimneys where annular space is fireblocked at each floor level in accordance with Section 717.2.5.

7. In other than Groups I-2 and I-3, a shaft enclosure is not required for a floor opening or an air transfer opening that complies with the following:

   7.1. Does not connect more than two stories.

   7.2. Is not part of the required means of egress system.

7.3. Is not concealed within the construction of a wall or a floor/ceiling assembly.

7.4. Is not open to a corridor in Group I and R occupancies.

7.5. Is not open to a corridor on nonsprinklered floors in any occupancy.

7.6. Is separated from floor openings and air transfer openings serving other floors by construction conforming to required shaft enclosures.

7.7. Is limited to the same smoke compartment

8. A shaft enclosure is not required for automobile ramps in open and enclosed parking garages constructed in accordance with Sections 406.3 and 406.4, respectively.

9. A shaft enclosure is not required for floor openings between a mezzanine and the floor below.

10. A shaft enclosure is not required for joints protected by a fire-resistant joint system in accordance with Section 714.

11. A shaft enclosure shall not be required for floor openings created by unenclosed stairs or ramps in accordance with Exception 3 or 4 in Section 1016.1.

12. Floor openings protected by floor fire doors in accordance with Section 712.8.

13. In Group I-3 occupancies, a shaft enclosure is not required for floor openings in accordance with Section 408.5.

14. A shaft enclosure is not required for elevator hoistways in open or enclosed parking garages that serve only the parking garage.

15. In open or enclosed parking garages a shaft enclosure is not required to enclose mechanical exhaust or supply duct systems when such duct system is contained within and serves only the parking garage.

16. Where permitted by other sections of this code.

708.3 Materials. The shaft enclosure shall be of materials permitted by the building type of construction.

708.4 Fire-resistance rating. Shaft enclosures shall have a fire-resistance rating of not less than 2 hours where connecting four stories or more, and not less than 1 hour where connecting less than four stories. The number of stories connected by the shaft enclosure shall include any basements but not any mezzanines. Shaft enclosures shall have a fire-resistance rating not less than the floor assembly penetrated, but need not exceed 2 hours. Shaft enclosures shall meet the requirements of Section 703.2.1.

708.5 Continuity. Shaft enclosures shall be constructed as fire barriers in accordance with Section 707 or horizontal assemblies constructed in accordance with Section 712, or both, and shall have continuity in accordance with Section 707.5 for fire barriers or Section 712.4 for horizontal assemblies as applicable.

708.6 Exterior walls. Where exterior walls serve as a part of a required shaft enclosure, such walls shall comply with the requirements of Section 705 for exterior walls and the fire-resistance-rated enclosure requirements shall not apply.

Exception: Exterior walls required to be fire-resistance rated in accordance with Section 1019.2 for exterior egress balconies, Section 1022.6 for exit enclosures and Section 1026.6 for exterior exit ramps and stairways.

708.7 Openings. Openings in a shaft enclosure shall be protected in accordance with Section 715 as required for fire barriers. Doors shall be self-or automatic-closing by smoke detection in accordance with Section 715.4.8.3.

708.7.1 Prohibited openings. Openings other than those necessary for the purpose of the shaft shall not be permitted in shaft enclosures.

708.8 Penetrations. Penetrations in a shaft enclosure shall be protected in accordance with Section 713 as required for fire barriers.

708.8.1 Prohibited penetrations. Penetrations other than those necessary for the purpose of the shaft shall not be permitted in shaft enclosures.

708.9 Joints. Joints in a shaft enclosure shall comply with Section 714.

708.10 Ducts and air transfer openings. Penetrations of a shaft enclosure by ducts and air transfer openings shall comply with Section 716.

708.11 Enclosure at the bottom. Shafts that do not extend to the bottom of the building or structure shall comply with one of the following:

1. They shall be enclosed at the lowest level with construction of the same fire-resistance rating as the lowest floor through which the shaft passes, but not less than the rating required for the shaft enclosure.

2. They shall terminate in a room having a use related to the purpose of the shaft. The room shall be separated from the remainder of the building by fire barriers constructed in accordance with Section 707 or horizontal assemblies constructed in accordance with Section 712, or both. The fire-resistance rating and opening protectives shall be at least equal to the protection required for the shaft enclosure.

3. They shall be protected by approved fire dampers installed in accordance with their listing at the lowest floor level within the shaft enclosure.

Exceptions:

1 The fire-resistance-rated room separation is not required, provided there are no openings in or penetrations of the shaft enclosure to the interior of the building except at the bottom. The bottom of the shaft shall be closed off around the penetrating items with materials permitted by Section 717.3.1 for draftstopping, or the room shall be provided with an approved automatic fire suppression system.

2 A shaft enclosure containing a refuse chute or laundry chute shall not be used for any other purpose and shall terminate in a room protected in accordance with Section 708.13.4.

3 The fire-resistance-rated room separation and the protection at the bottom of the shaft are not required provided there are no combustibles in the shaft and there are no openings or other penetrations through the shaft enclosure to the interior of the building.

708.12 Enclosure at the top. A shaft enclosure that does not extend to the underside of the roof sheathing, deck or slab of the building shall be enclosed at the top with construction of the same fire-resistance rating as the topmost floor

penetrated by the shaft, but not less than the fire-resistance rating required for the shaft enclosure.

708.13 Refuse and laundry chutes. Refuse and laundry chutes, access and termination rooms and incinerator rooms shall meet the requirements of Sections 708.13.1 through 708.13.6.

Exception: Chutes serving and contained within a single dwelling unit.

708.13.1 Refuse and laundry chute enclosures. A shaft enclosure containing a refuse or laundry chute shall not be used for any other purpose and shall be enclosed in accordance with Section 708.4. Openings into the shaft, including those from access rooms and termination rooms, shall be protected in accordance with this section and Section 715. Openings into chutes shall not be located in corridors. Doors shall be self-or automatic-closing upon the actuation of a smoke detector in accordance with Section 715.4.8.3, except that heat-activated closing devices shall be permitted between the shaft and the termination room.

708.13.2 Materials. A shaft enclosure containing a refuse or laundry chute shall be constructed of materials as permitted by the building type of construction.

708.13.3 Refuse and laundry chute access rooms. Access openings for refuse and laundry chutes shall be located in rooms or compartments enclosed by not less than 1-hour fire barriers constructed in accordance with Section 707 or horizontal assemblies constructed in accordance with Section 712, or both. Openings into the access rooms shall be protected by opening protectives having a fire protection rating of not less than ¾ hour. Doors shall be self-or automatic-closing upon the detection of smoke in accordance with Section 715.4.8.3.

708.13.4 Termination room. Refuse and laundry chutes shall discharge into an enclosed room separated from the remainder of the building by not less than 1-hour fire barriers constructed in accordance with Section 707 or horizontal assemblies constructed in accordance with Section 712, or both. Openings into the termination room shall be protected by opening protectives having a fire protection rating of not less than ¾ hour. Doors shall be self-or automatic-closing upon the detection of smoke in accordance with Section 715.4.8.3. Refuse chutes shall not terminate in an incinerator room. Refuse

and laundry rooms that are not provided with chutes need only comply with Table 508.2.5.

708.13.5 Incinerator room. Incinerator rooms shall comply with Table 508.2.5.

708.13.6 Automatic sprinkler system. An approved automatic sprinkler system shall be installed in accordance with Section 903.2.11.2.

708.14 Elevator, dumbwaiter and other hoistways. Elevator, dumbwaiter and other hoistway enclosures shall be constructed in accordance with Section 708 and Chapter 30.

708.14.1 Elevator lobby. An enclosed elevator lobby shall be provided at each floor where an elevator shaft enclosure connects more than three stories. The lobby enclosure shall separate the elevator shaft enclosure doors from each floor by fire partitions. In addition to the requirements in Section 709 for fire partitions, doors protecting openings in the elevator lobby enclosure walls shall also comply with Section 715.4.3 as required for corridor walls and penetrations of the elevator lobby enclosure by ducts and air transfer openings shall be protected as required for corridors in accordance with Section 716.5.4.1. Elevator lobbies shall have at least one means of egress complying with Chapter 10 and other provisions within this code.

Exceptions:

1 Enclosed elevator lobbies are not required at the street floor, provided the entire street floor is equipped with an automatic sprinkler system in accordance with Section 903.3.1.1.

2 Elevators not required to be located in a shaft in accordance with Section 708.2 are not required to have enclosed elevator lobbies.

3 Enclosed elevator lobbies are not required where additional doors are provided at the hoistway opening in accordance with Section 3002.6. Such doors shall be tested in accordance with UL 1784 without an artificial bottom seal.

4. Enclosed elevator lobbies are not required where the building is protected by an automatic sprinkler system installed in accordance with Section 903.3.1.1 or 903.3.1.2. This exception shall not apply

to the following:

4.1. Group I-2 occupancies;

4.2. Group I-3 occupancies; and

4.3. High-rise buildings.

5. Smoke partitions shall be permitted in lieu of fire partitions to separate the elevator lobby at each floor where the building is equipped throughout with an automatic sprinkler system installed in accordance with Section 903.3.1.1 or 903.3.1.2. In addition to the requirements in Section 711 for smoke partitions, doors protecting openings in the smoke partitions shall also comply with Sections 711.5.2, 711.5.3, and 715.4.8 and duct penetrations of the smoke partitions shall be protected as required for corridors in accordance with Section 716.5.4.1.

6. Enclosed elevator lobbies are not required where the elevator hoistway is pressurized in accordance with Section 708.14.2.

7. Enclosed elevator lobbies are not required where the elevator serves only open parking garages in accordance with Section 406.3.

708.14.1.1 Areas of refuge. Areas of refuge shall be provided as required in Section 1007.

708.14.2 Enclosed elevator lobby. Where elevator hoist-way pressurization is provided in lieu of required enclosed elevator lobbies, the pressurization system shall comply with this section.

708.14.2.1 Pressurization requirements. Elevator hoistways shall be pressurized to maintain a minimum positive pressure of 0.10 inches of water (25 Pa) and a maximum positive pressure of 0.25 inches of water (67 Pa) with respect to adjacent occupied space on all floors. This pressure shall be measured at the midpoint of each hoistway door, with all elevator cars at the floor of recall and all hoistway doors on the floor of recall open and all other hoistway doors closed. The opening and closing of hoistway doors at each level must be demonstrated during this test. The supply air intake shall be from an outside, uncontaminated source located a

minimum distance of 20 feet (6096 mm) from any air exhaust system or outlet.
Exception: *Hoistway venting required by Section 3004 need not be provided for pressurized elevator shafts.*

708.14.2.2 Rational analysis. A rational analysis complying with Section 909.4 shall be submitted with the construction documents.

708.14.2.3 Ducts for system. Any duct system that is part of the pressurization system shall be protected with the same fire-resistance rating as required for the elevator shaft enclosure.

708.14.2.4 Fan system. The fan system provided for the pressurization system shall be as required by this section.

708.14.2.4.1 Fire resistance. When located within the building, the fan system that provides the pressurization shall be protected with the same fire-resistance rating required for the elevator shaft enclosure.

708.14.2.4.2 Smoke detection. The fan system shall be equipped with a smoke detector that will automatically shut down the fan system when smoke is detected within the system.

708.14.2.4.3 Separate systems. A separate fan system shall be used for each elevator hoistway.

708.14.2.4.4 Fan capacity. The supply fan shall either be adjustable with a capacity of at least 1,000 cfm (.4719 m^3/s) per door, or that specified by a registered design professional to meet the requirements of a designed pressurization system.

708.14.2.5 Standby power. The pressurization system shall be provided with standby power from the same source as other required emergency systems for the building.

708.14.2.6 Activation of pressurization system. The elevator pressurization system shall be activated upon activation of the building fire alarm system or upon activation of the elevator lobby smoke detectors. Where both a building fire alarm system and elevator lobby smoke detectors are present, each shall be independently capable of activating the pressurization system.

708.14.2.7 Special inspection. Special inspection for performance shall be required in accordance with Section 909.18.8. System acceptance shall be in accordance with Section 909.19.

708.14.2.8 Marking and identification. Detection and control systems shall be marked in accordance with Section 909.14.

708.14.2.9 Control diagrams. Control diagrams shall be provided in accordance with Section 909.15.

708.14.2.10 Control panel. A control panel complying with Section 909.16 shall be provided.

708.14.2.11 System response time. Hoistway pressurization systems shall comply with the requirements for smoke control system response time in Section 909.17.

SECTION 709
FIRE PARTITIONS

709.1 General. The following wall assemblies shall comply with this section.

1. Walls separating dwelling units in the same building as required by Section 420.2.

2. Walls separating sleeping units in the same building as required by Section 420.2.

3. Walls separating tenant spaces in covered mall buildings as required by Section 402.7.2.

4. Corridor walls as required by Section 1018.1.

5. Elevator lobby separation as required by Section 708.14.1.

709.2 Materials. The walls shall be of materials permitted by the building type of construction.

709.3 Fire-resistance rating. Fire partitions shall have a fire-resistance rating of not less than 1 hour.

Exceptions:

1. Corridor walls permitted to have a ½ hour fire-resistance rating by Table 1018.1.

2. Dwelling unit and sleeping unit separations in buildings of Type IIB, IIIB and VB construction shall have fire-resistance ratings of not less than ½ hour in buildings equipped throughout with an automatic sprinkler system in accordance with Section 903.3.1.1.

709.4 Continuity. Fire partitions shall extend from the top of the foundation or floor/ceiling assembly below to the underside of the floor or roof sheathing, slab or deck above or to the fire-resistance-rated floor/ceiling or roof/ceiling assembly above, and shall be securely attached thereto. If the partitions are not continuous to the sheathing, deck or slab, and where constructed of combustible construction, the space between the ceiling and the sheathing, deck or slab above shall be fireblocked or draftstopped in accordance with Sections 717.2 and 717.3 at the partition line. The supporting construction shall be protected to afford the required fire-resistance rating of the wall supported, except for walls separating tenant spaces in covered mall buildings, walls separating dwelling units, walls separating sleeping units and corridor walls in buildings of Type IIB, IIIB and VB construction.

Exceptions:

1 The wall need not be extended into the crawl space below where the floor above the crawl space has a minimum 1-hour fire-resistance rating.

2 Where the room-side fire-resistance-rated membrane of the corridor is carried through to the underside of the floor or roof sheathing, deck or slab of a fire-resistance-rated floor or roof above, the ceiling of the corridor shall be permitted to be protected by the use of ceiling materials as required for a 1-hour fire-resistance-rated floor or roof system.

3 Where the corridor ceiling is constructed as required for the corridor walls, the walls shall be permitted to terminate at the upper membrane of such ceiling assembly.

4 The fire partitions separating tenant spaces in a covered mall building, complying with Section 402.7.2, are not required to extend beyond the

underside of a ceiling that is not part of a fire-resistance-rated assembly. A wall is not required in attic or ceiling spaces above tenant separation walls.

5 Fireblocking or draftstopping is not required at the partition line in Group R-2 buildings that do not exceed four stories above grade plane, provided the attic space is subdivided by draftstopping into areas not exceeding 3,000 square feet (279 m^2) or above every two dwelling units, whichever is smaller.

6 Fireblocking or draftstopping is not required at the partition line in buildings equipped with an automatic sprinkler system installed throughout in accordance with Section 903.3.1.1 or 903.3.1.2, provided that automatic sprinklers are installed in combustible floor/ceiling and roof/ceiling spaces.

709.5 Exterior walls. Where exterior walls serve as a part of a required fire-resistance-rated separation, such walls shall comply with the requirements of Section 705 for exterior walls, and the fire-resistance-rated separation requirements shall not apply.

Exception: Exterior walls required to be fire-resistance rated in accordance with Section 1019.2 for exterior egress balconies, Section 1022.6 for exit enclosures and Section 1026.6 for exterior exit ramps and stairways.

709.6 Openings. Openings in a fire partition shall be protected in accordance with Section 715.

709.7 Penetrations. Penetrations of fire partitions shall comply with Section 713.

709.8 Joints. Joints made in or between fire partitions shall comply with Section 714.

709.9 Ducts and air transfer openings. Penetrations in a fire partition by ducts and air transfer openings shall comply with Section 716.

SECTION 710
SMOKE BARRIERS

710.1 General. Smoke barriers shall comply with this section.

710.2 Materials. Smoke barriers shall be of materials permitted by the building type of construction.

710.3 Fire-resistance rating. A 1-hour fire-resistance rating is required for smoke barriers.

Exception: Smoke barriers constructed of minimum 0.10-inch-thick (2.5 mm) steel in Group I-3 buildings.

710.4 Continuity. Smoke barriers shall form an effective membrane continuous from outside wall to outside wall and from the top of the foundation or floor/ceiling assembly below to the underside of the floor or roof sheathing, deck or slab above, including continuity through concealed spaces, such as those found above suspended ceilings, and interstitial structural and mechanical spaces. The supporting construction shall be protected to afford the required fire-resistance rating of the wall or floor supported in buildings of other than Type IIB, IIIB or VB construction.

***~~Exception~~Exceptions*:**

1. Smoke-barrier walls are not required in interstitial spaces where such spaces are designed and constructed with ceilings that provide resistance to the passage of fire and smoke equivalent to that provided by the smoke-barrier walls.

2. Smoke barriers used for elevator lobbies in accordance with Section 405.4.3, 3007.4.2 and 3008.11.2 are not required to extend from outside wall to outside wall.

3. Smoke barriers used for areas of refuge in accordance with Section 1007.6.2 are not required to extend from outside wall to outside wall.

710.5 Openings. Openings in a smoke barrier shall be protected in accordance with Section 715.

Exceptions:

1. In Group I-2, where doors are installed across corridors, a pair of opposite-swinging doors without a center mullion shall be installed having vision panels with fire-protection-rated glazing materials in fire-protection-rated frames, the area of which shall not exceed that tested. The doors shall be close fitting within operational tolerances,

and shall not have undercuts in excess of ¾-inch, louvers or grilles. The doors shall have head and jamb stops, astragals or rabbets at meeting edges and shall be automatic-closing by smoke detection in accordance with Section 715.4.8.3. Where permitted by the door manufacturer's listing, positive-latching devices are not required.

2. In Group I-2, horizontal sliding doors installed in accordance with Section 1008.1.4.3 and protected in accordance with Section 715.

710.6 Penetrations. Penetrations of smoke barriers shall comply with Section 713.

710.7 Joints. Joints made in or between smoke barriers shall comply with Section 714.

710.8 Ducts and air transfer openings. Penetrations in a smoke barrier by ducts and air transfer openings shall comply with Section 716.

SECTION 711
SMOKE PARTITIONS

711.1 General. Smoke partitions installed as required elsewhere in the code shall comply with this section.

711.2 Materials. The walls shall be of materials permitted by the building type of construction.

711.3 Fire-resistance rating. Unless required elsewhere in the code, smoke partitions are not required to have a fire-resistance rating.

711.4 Continuity. Smoke partitions shall extend from the top of the foundation or floor below to the underside of the floor or roof sheathing, deck or slab above or to the underside of the ceiling above where the ceiling membrane is constructed to limit the transfer of smoke.

711.5 Openings. Windows shall be sealed to resist the free passage of smoke or be automatic-closing upon detection of smoke. Doors in smoke partitions shall comply with this section.

711.5.1 Louvers. Doors in smoke partitions shall not include louvers.

711.5.2 Smoke and draft control doors. Where required elsewhere in the code, doors in smoke partitions shall meet the requirements for a smoke and draft control door assembly tested in accordance with UL 1784. The air leakage rate of the door assembly shall not exceed 3.0 cubic feet per minute per square foot (0.015424 $m^3/(s \cdot m^2)$) of door opening at 0.10 inch (24.9 Pa) of water for both the ambient temperature test and the elevated temperature exposure test. Installation of smoke doors shall be in accordance with NFPA 105.

711.5.3 Self-or automatic-closing doors. Where required elsewhere in the code, doors in smoke partitions shall be self-or automatic-closing by smoke detection in accordance with Section 715.4.8.3.

711.6 Penetrations and joints. The space around penetrating items and in joints shall be filled with an approved material to limit the free passage of smoke.

711.7 Ducts and air transfer openings. The space around a duct penetrating a smoke partition shall be filled with an approved material to limit the free passage of smoke. Air transfer openings in smoke partitions shall be provided with a smoke damper complying with Section 716.3.2.2.

Exception: Where the installation of a smoke damper will interfere with the operation of a required smoke control system in accordance with Section 909, approved alternative protection shall be utilized.

SECTION 712
HORIZONTAL ASSEMBLIES

712.1 General. Floor and roof assemblies required to have a fire-resistance rating shall comply with this section. Nonfire-resistance-rated floor and roof assemblies shall comply with Section 713.4.2.

712.2 Materials. The floor and roof assemblies shall be of materials permitted by the building type of construction.

712.3 Fire-resistance rating. The fire-resistance rating of floor and roof assemblies shall not be less than that required by the building type of construction. Where the floor assembly separates mixed occupancies, the assembly shall have a fire-resistance rating of not less than that required by Section 508.4 based on the occupancies being separated. Where the floor assembly separates a single occupancy into different fire areas, the assembly shall

have a fire-resistance rating of not less than that required by Section 707.3.9. Horizontal assemblies separating dwelling units in the same building and horizontal assemblies separating sleeping units in the same building shall be a minimum of 1-hour fire-resistance-rated construction.

Exception: Dwelling unit and sleeping unit separations in buildings of Type IIB, IIIB and VB construction shall have fire-resistance ratings of not less than 1/2 hour in buildings equipped throughout with an automatic sprinkler system in accordance with Section 903.3.1.1.

712.3.1 Ceiling panels. Where the weight of lay-in ceiling panels, used as part of fire-resistance-rated floor/ceiling or roof/ceiling assemblies, is not adequate to resist an upward force of 1 pound per square foot (48 Pa), wire or other approved devices shall be installed above the panels to prevent vertical displacement under such upward force.

712.3.2 Access doors. Access doors shall be permitted in ceilings of fire-resistance-rated floor/ceiling and roof/ceiling assemblies provided such doors are tested in accordance with ASTM E 119 or UL 263 as horizontal assemblies and labeled by an approved agency for such purpose.

712.3.3 Unusable space. In 1-hour fire-resistance-rated floor assemblies, the ceiling membrane is not required to be installed over unusable crawl spaces. In 1-hour fire-resistance-rated roof assemblies, the floor membrane is not required to be installed where unusable attic space occurs above.

712.4 Continuity. Assemblies shall be continuous without openings, penetrations or joints except as permitted by this section and Sections 708.2, 713.4, 714 and 1022.1. Skylights and other penetrations through a fire-resistance-rated roof deck or slab are permitted to be unprotected, provided that the structural integrity of the fire-resistance-rated roof assembly is maintained. Unprotected skylights shall not be permitted in roof assemblies required to be fire-resistance rated in accordance with Section *705.8.6*. The supporting construction shall be protected to afford the required fire-resistance rating of the horizontal assembly supported.

Exception: In buildings of Type IIB, IIIB or VB construction, the construction supporting the horizontal assembly is not required to be fire-resistance-rated at the following:

1. Horizontal assemblies at the separations of incidental uses as specified by Table 508.2.5, provided the required fire-resistance rating does not exceed 1 hour.

2. Horizontal assemblies at the separations of dwelling units and sleeping units as required by Section 420.3.

3. Horizontal assemblies at smoke barriers constructed in accordance with Section 710.

712.5 Penetrations. Penetrations of horizontal assemblies shall comply with Section 713.

712.6 Joints. Joints made in or between horizontal assemblies shall comply with Section 714. The void created at the intersection of a floor/ceiling assembly and an exterior curtain wall assembly shall be protected in accordance with Section 714.4.

712.7 Ducts and air transfer openings. Penetrations in horizontal assemblies by ducts and air transfer openings shall comply with Section 716.

712.8 Floor fire door assemblies. Floor fire door assemblies used to protect openings in fire-resistance-rated floors shall be tested in accordance with NFPA 288, and shall achieve a fire-resistance rating not less than the assembly being penetrated. Floor fire door assemblies shall be labeled by an approved agency. The label shall be permanently affixed and shall specify the manufacturer, the test standard and the fire-resistance rating.

712.9 Smoke barrier. Where horizontal assemblies are required to resist the movement of smoke by other sections of this code in accordance with the definition of smoke barrier, penetrations and joints in such horizontal assemblies shall be protected as required for smoke barriers in accordance with Sections 713.5 and 714.6. Regardless of the number of stories connected by elevator shaft enclosures, doors located in elevator shaft enclosures that penetrate the horizontal assembly shall be protected by enclosed elevator lobbies complying with Section 708.14.1. Openings through horizontal assemblies shall be protected by shaft enclosures complying with Section 708. Horizontal assemblies shall not be allowed to have unprotected vertical openings.

SECTION 713
PENETRATIONS

713.1 Scope. The provisions of this section shall govern the materials and methods of construction used to protect through penetrations and membrane penetrations of horizontal assemblies and fire-resistance-rated wall assemblies.

713.1.1 Ducts and air transfer openings. Penetrations of fire-resistance-rated walls by ducts that are not protected with dampers shall comply with Sections 713.2 through 713.3.3. Penetrations of horizontal assemblies not protected with a shaft as permitted by Exception 4 of Section 708.2, and not required to be protected with fire dampers by other sections of this code, shall comply with Sections 713.4 through 713.4.2.2. Ducts and air transfer openings that are protected with dampers shall comply with Section 716.

713.2 Installation details. Where sleeves are used, they shall be securely fastened to the assembly penetrated. The space between the item contained in the sleeve and the sleeve itself and any space between the sleeve and the assembly penetrated shall be protected in accordance with this section. Insulation and coverings on or in the penetrating item shall not penetrate the assembly unless the specific material used has been tested as part of the assembly in accordance with this section.

713.3 Fire-resistance-rated walls. Penetrations into or through fire walls, fire barriers, smoke barrier walls and fire partitions shall comply with Sections 713.3.1 through 713.3.3. Penetrations in smoke barrier walls shall also comply with Section 713.5.

713.3.1 Through penetrations. Through penetrations of fire-resistance-rated walls shall comply with Section 713.3.1.1 or 713.3.1.2.

Exception: Where the penetrating items are steel, ferrous or copper pipes, tubes or conduits, the annular space between the penetrating item and the fire-resistance-rated wall is permitted to be protected as follows:

1. In concrete or masonry walls where the penetrating item is a maximum 6-inch (152 mm) nominal diameter and the area of the opening through the wall does not exceed 144 square inches (0.0929 m2), concrete, grout or mortar is permitted where it is installed the full thickness of the wall or the thickness required to maintain the fire-resistance rating; or

2. The material used to fill the annular space shall prevent the passage of flame and hot gases sufficient to ignite cotton waste when subjected to ASTM E 119 or UL 263 time-temperature fire conditions under a minimum positive pressure differential of 0.01 inch (2.49 Pa) of water at the location of the penetration for the time period equivalent to the fire-resistance rating of the construction penetrated.

713.3.1.1 Fire-resistance-rated assemblies. Penetrations shall be installed as tested in an approved fire-resistance-rated assembly.

713.3.1.2 Through-penetration firestop system. Through penetrations shall be protected by an approved penetration firestop system installed as tested in accordance with ASTM E 814 or UL 1479, with a minimum positive pressure differential of 0.01 inch (2.49 Pa) of water and shall have an F rating of not less than the required fire-resistance rating of the wall penetrated.

713.3.2 Membrane penetrations. Membrane penetrations shall comply with Section 713.3.1. Where walls or partitions are required to have a fire-resistance rating, recessed fixtures shall be installed such that the required fire-resistance will not be reduced.

Exceptions:

1. Membrane penetrations of maximum 2-hour fire-resistance-rated walls and partitions by steel electrical boxes that do not exceed 16 square inches (0.0103 m2) in area, provided the aggregate area of the openings through the membrane does not exceed 100 square inches (0.0645 m^2) in any 100 square feet (9.29 m^2) of wall area. The annular space between the wall membrane and the box shall not exceed $^1/_8$ inch (3.1 mm). Such boxes on opposite sides of the wall or partition shall be separated by one of the following:

    1.1. By a horizontal distance of not less than 24 inches (610 mm) where the wall or partition is constructed with individual noncommunicating stud cavities;

1.2. By a horizontal distance of not less than the depth of the wall cavity where the wall cavity is filled with cellulose loose-fill, rockwool or slag mineral wool insulation;

1.3. By solid fireblocking in accordance with Section 717.2.1;

1.4. By protecting both outlet boxes with listed putty pads; or

1.5. By other listed materials and methods.

2. Membrane penetrations by listed electrical boxes of any material, provided such boxes have been tested for use in fire-resistance-rated assemblies and are installed in accordance with the instructions included in the listing. The annular space between the wall membrane and the box shall not exceed $^{1}/_{8}$ inch (3.1 mm) unless listed otherwise. Such boxes on opposite sides of the wall or partition shall be separated by one of the following:

2.1. By the horizontal distance specified in the listing of the electrical boxes;

2.2. By solid fireblocking in accordance with Section 717.2.1;

2.3. By protecting both boxes with listed putty pads; or

2.4. By other listed materials and methods.

3. Membrane penetrations by electrical boxes of any size or type, which have been listed as part of a wall opening protective material system for use in fire-resistance-rated assemblies and are installed in accordance with the instructions included in the listing.

4. Membrane penetrations by boxes other than electrical boxes, provided such penetrating items and the annular space between the wall membrane and the box, are protected by an approved

membrane penetration firestop system installed as tested in accordance with ASTM E 814 or UL 1479, with a minimum positive pressure differential of 0.01 inch (2.49 Pa) of water, and shall have an F and T rating of not less than the required fire-resistance rating of the wall penetrated and be installed in accordance with their listing.

5. The annular space created by the penetration of an automatic sprinkler, provided it is covered by a metal escutcheon plate.

713.3.3 Dissimilar materials. Noncombustible penetrating items shall not connect to combustible items beyond the point of firestopping unless it can be demonstrated that the fire-resistance integrity of the wall is maintained.

713.4 Horizontal assemblies. Penetrations of a floor, floor/ceiling assembly or the ceiling membrane of a roof/ceiling assembly not required to be enclosed in a shaft by Section 708.2 shall be protected in accordance with Sections 713.4.1 through 713.4.2.2.

713.4.1 Fire-resistance-rated assemblies. Penetrations of the fire-resistance-rated floor, floor/ceiling assembly or the ceiling membrane of a roof/ceiling assembly shall comply with Sections 713.4.1.1 through 713.4.1.4. Penetrations in horizontal smoke barriers shall also comply with 713.5.

713.4.1.1 Through penetrations. Through penetrations of fire-resistance-rated horizontal assemblies shall comply with Section 713.4.1.1.1 or 713.4.1.1.2.

Exceptions:

1. Penetrations by steel, ferrous or copper conduits, pipes, tubes or vents or concrete or masonry items through a single fire-resistance rated floor assembly where the annular space is protected with materials that prevent the passage of flame and hot gases sufficient to ignite cotton waste when subjected to ASTM E 119 or UL 263 time-temperature fire conditions under a minimum positive pressure differential of 0.01 inch (2.49 Pa) of water at the location of the penetration for the time period equivalent to the fire-resistance rating of the construction penetrated. Penetrating items with a maximum 6-inch (152 mm) nominal diameter shall not be limited to the

penetration of a single fire-resistance-rated floor assembly, provided the aggregate area of the openings through the assembly does not exceed 144 square inches (92 900 mm^2) in any 100 square feet (9.3 m^2) of floor area.

2. Penetrations in a single concrete floor by steel, ferrous or copper conduits, pipes, tubes or vents with a maximum 6-inch (152 mm) nominal diameter, provided the concrete, grout or mortar is installed the full thickness of the floor or the thickness required to maintain the fire-resistance rating. The penetrating items shall not be limited to the penetration of a single concrete floor, provided the area of the opening through each floor does not exceed 144 square inches (92 900 mm2).

3. Penetrations by listed electrical boxes of any material, provided such boxes have been tested for use in fire-resistance-rated assemblies and installed in accordance with the instructions included in the listing.

713.4.1.1.1 Installation. Through penetrations shall be installed as tested in the approved fire-resistance-rated assembly.

713.4.1.1.2 Through-penetration firestop system. Through penetrations shall be protected by an approved through-penetration firestop system installed and tested in accordance with ASTM E 814 or UL 1479, with a minimum positive pressure differential of 0.01 inch of water (2.49 Pa). The system shall have an F rating/T rating of not less than 1 hour but not less than the required rating of the floor penetrated.

Exception: Floor penetrations contained and located within the cavity of a wall above the floor or below the floor do not require a T rating.

713.4.1.2 Membrane penetrations. Penetrations of membranes that are part of a horizontal assembly shall comply with Section 713.4.1.1.1 or 713.4.1.1.2. Where floor/ceiling assemblies are required to have a fire-resistance rating, recessed fixtures shall be installed such that the required fire resistance will not be reduced.

Exceptions:

1. Membrane penetrations by steel, ferrous or copper conduits, pipes, tubes or vents, or concrete or masonry items where the annular space is protected either in accordance with Section 713.4.1.1 or to prevent the free passage of flame and the products of combustion. The aggregate area of the openings through the membrane shall not exceed 100 square inches (64 500 mm^2) in any 100 square feet (9.3 m^2) of ceiling area in assemblies tested without penetrations.

2. Ceiling membrane penetrations of maximum 2-hour horizontal assemblies by steel electrical boxes that do not exceed 16 square inches (10 323 mm^2) in area, provided the aggregate area of such penetrations does not exceed 100 square inches (44 500 mm^2) in any 100 square feet (9.29 m^2) of ceiling area, and the annular space between the ceiling membrane and the box does not exceed $^1/_8$ inch (3.2 mm).

3. Membrane penetrations by electrical boxes of any size or type, which have been listed as part of an opening protective material system for use in horizontal assemblies and are installed in accordance with the instructions included in the listing.

4. Membrane penetrations by listed electrical boxes of any material, provided such boxes have been tested for use in fire-resistance-rated assemblies and are installed in accordance with the instructions included in the listing. The annular space between the ceiling membrane and the box shall not exceed $^1/_8$ inch (3.2 mm) unless listed otherwise.

5. The annular space created by the penetration of a fire sprinkler, provided it is covered by a metal *escutcheon* plate.

6. *Noncombustible items that are cast into concrete building elements and that do not penetrate both top and bottom surfaces of the element.*

7. The ceiling membrane of 1- and 2-hour fire-resistance-rated horizontal assemblies is permitted to be interrupted with the double wood top plate of a fire-resistance-rated wall assembly, provided that all penetrating items through the double top plates are protected in accordance with Section 713.4.1.1.1 or 714.3.1.1.2. The fire-resistance rating of the wall shall not be less than the rating of the horizontal assembly.

713.4.1.3 Ducts and air transfer openings. Penetrations of horizontal assemblies by ducts and air transfer openings shall comply with Section 716.

713.4.1.4 Dissimilar materials. Noncombustible penetrating items shall not connect to combustible materials beyond the point of firestopping unless it can be demonstrated that the fire-resistance integrity of the horizontal assembly is maintained.

713.4.2 Nonfire-resistance-rated assemblies. Penetrations of nonfire-resistance-rated floor or floor/ceiling assemblies or the ceiling membrane of a nonfire-resistance rated roof/ceiling assembly shall meet the requirements of Section 708 or shall comply with Section 713.4.2.1 or 713.4.2.2.

713.4.2.1 Noncombustible penetrating items. Noncombustible penetrating items that connect not more than three stories are permitted, provided that the annular space is filled to resist the free passage of flame and the products of combustion with an approved noncombustible material or with a fill, void or cavity material that is tested and classified for use in through-penetration firestop systems.

713.4.2.2 Penetrating items. Penetrating items that connect not more than two stories are permitted, provided that the annular space is filled with an approved material to resist the free passage of flame and the products of combustion.

713.5 Penetrations in smoke barriers. Penetrations in smoke barriers shall be tested in accordance with the requirements of UL 1479 for air leakage. The air leakage rate of the penetration assemblies measured at 0.30 inch (7.47 Pa) of water in both the ambient temperature and elevated temperature tests, shall not exceed:

1. 5.0 cfm per square foot ($0.025 m^3/s \cdot m^2$) of penetration opening for each through-penetration firestop system;or

2. A total cumulative leakage of 50 cfm ($0.024 m^3/s$) for any 100 square feet ($9.3 m^2$) of wall area, or floor area.

SECTION 714
FIRE-RESISTANT JOINT SYSTEMS

714.1 General. Joints installed in or between fire-resistance-rated walls, floor or floor/ceiling assemblies and roofs or roof/ceiling assemblies shall be protected by an approved fire-resistant joint system designed to resist the passage of fire for a time period not less than the required fire-resistance rating of the wall, floor or roof in or between which it is installed. Fire-resistant joint systems shall be tested in accordance with Section 714.3. The void created at the intersection of a floor/ceiling assembly and an exterior curtain wall assembly shall be protected in accordance with Section 714.4.

Exception: Fire-resistant joint systems shall not be required for joints in all of the following locations:

1. Floors within a single dwelling unit.

2. Floors where the joint is protected by a shaft enclosure in accordance with Section 708.

3. Floors within atriums where the space adjacent to the atrium is included in the volume of the atrium for smoke control purposes.

4. Floors within malls.

5. Floors and ramps within open and enclosed parking garages or structures constructed in accordance with Sections 406.3 and 406.4, respectively.

6. Mezzanine floors.

7. Walls that are permitted to have unprotected openings.

8. Roofs where openings are permitted.

9. Control joints not exceeding a maximum width of 0.625 inch (15.9 mm) and tested in accordance with ASTM E 119 or UL 263.

714.2 Installation. Fire-resistant joint systems shall be securely installed in or on the joint for its entire length so as not to dislodge, loosen or otherwise impair its ability to accommodate expected building movements and to resist the passage of fire and hot gases.

714.3 Fire test criteria. Fire-resistant joint systems shall be tested in accordance with the requirements of either ASTM E 1966 or UL 2079. Nonsymmetrical wall joint systems shall be tested with both faces exposed to the furnace, and the assigned fire-resistance rating shall be the shortest duration obtained from the two tests. When evidence is furnished to show that the wall was tested with the least fire-resistant side exposed to the furnace, subject to acceptance of the building official, the wall need not be subjected to tests from the opposite side.

> **Exception:** For exterior walls with a horizontal fire separation distance greater than 5 feet (1524 mm), the joint system shall be required to be tested for interior fire exposure only.

714.4 Exterior curtain wall/floor intersection. Where fire resistance-rated floor or floor/ceiling assemblies are required, voids created at the intersection of the exterior curtain wall assemblies and such floor assemblies shall be sealed with an approved system to prevent the interior spread of fire. Such systems shall be securely installed and tested in accordance with ASTM E 2307 to prevent the passage of flame for the time period at least equal to the fire-resistance rating of the floor assembly and prevent the passage of heat and hot gases sufficient to ignite cotton waste. Height and fire-resistance requirements for curtain wall spandrels shall comply with Section 705.8.5.

> ***Exception:*** *Voids created at the intersection of the exterior curtain wall assemblies and such floor assemblies where the vision glass extends to the finished floor level shall be permitted to be sealed with an approved material to prevent the interior spread of fire. Such material shall be securely installed and capable of preventing the passage of flame and hot gases sufficient to ignite cotton waste where subjected to ASTM E 119 time-temperature fire conditions under a minimum positive pressure differential of 0.01 inch (0.254 mm) of water column (2.5 Pa) for the time period at least equal to the fire-resistance rating of the floor assembly.*

> **714.4.1 Exterior curtain wall/nonfire-resistance-rated floor assembly intersections.** Voids created at the intersection of exterior curtain wall assemblies and nonfire-resistance-rated floor or floor/ceiling assemblies shall

be sealed with an approved material or system to retard the interior spread of fire and hot gases between stories.

714.5 Spandrel wall. Height and fire-resistance requirements for curtain wall spandrels shall comply with Section 705.8.5. Where Section 705.8.5 does not require a fire-resistance-rated spandrel wall, the requirements of Section 714.4 shall still apply to the intersection between the spandrel wall and the floor.

714.6 Fire-resistant joint systems in smoke barriers. Fire-resistant joint systems in smoke barriers, and joints at the intersection of a horizontal smoke barrier and an exterior curtain wall, shall be tested in accordance with the requirements of UL 2079 for air leakage. The air leakage rate of the joint shall not exceed 5 cfm per lineal foot (0.00775 $m^3/s \cdot m$) of joint at 0.30 inch (7.47 Pa) of water for both the ambient temperature and elevated temperature tests.

SECTION 715
OPENING PROTECTIVES

715.1 General. Opening protectives required by other sections of this code shall comply with the provisions of this section.

715.2 Fire-resistance-rated glazing. Fire-resistance-rated glazing tested as part of a fire-resistance-rated wall assembly in accordance with ASTM E 119 or UL 263 and labeled in accordance with Section 703.5 shall be permitted in fire doors and fire window assemblies in accordance with their listings and shall not otherwise be required to comply with this section.

715.3 Alternative methods for determining fire protection ratings. The application of any of the alternative methods listed in this section shall be based on the fire exposure and acceptance criteria specified in NFPA 252, NFPA 257 or UL 9. The required fire resistance of an opening protective shall be permitted to be established by any of the following methods or procedures:

1. Designs documented in *referenced publications* approved *in accordance with this code*.

2. Calculations performed in *accordance with Section 106.5*.

3. Engineering analysis based on a comparison of opening protective designs having fire protection ratings as determined by the test procedures set forth in NFPA 252, NFPA 257 or UL 9.

4. Alternative protection methods as allowed by Section *106.5*.

715.4 Fire door and shutter assemblies. Approved fire door and fire shutter assemblies shall be constructed of any material or assembly of component materials that conforms to the test requirements of Section 715.4.1, 715.4.2 or 715.4.3 and the fire protection rating indicated in Table 715.4. Fire door frames with transom lights, sidelights or both shall be permitted in accordance with Section 715.4.5. Fire door assemblies and shutters shall be installed in accordance with the provisions of this section and NFPA 80.

Exceptions:

1. Labeled protective assemblies that conform to the requirements of this section or UL 10A, UL 14B and UL 14C for tin-clad fire door assemblies.

2. Floor fire door assemblies in accordance with Section 712.8.

715.4.1 Side-hinged or pivoted swinging doors. Fire door assemblies with side-hinged and pivoted swinging doors shall be tested in accordance with NFPA 252 or UL 10C. After 5 minutes into the NFPA 252 test, the neutral pressure level in the furnace shall be established at 40 inches (1016 mm) or less above the sill.

715.4.2 Other types of assemblies. Fire door assemblies with other types of doors, including swinging elevator doors and fire shutter assemblies, shall be tested in accordance with NFPA 252 or UL 10B. The pressure in the furnace shall be maintained as nearly equal to the atmospheric pressure as possible. Once established, the pressure shall be maintained during the entire test period.

715.4.3 Door assemblies in corridors and smoke barriers. Fire door assemblies required to have a minimum fire protection rating of 20 minutes where located in corridor walls or smoke barrier walls having a fire-resistance rating in accordance with Table 715.4 shall be tested in accordance with NFPA 252 or UL 10C without the hose stream test.

Exceptions:

1. Viewports that require a hole not larger than 1 inch (25 mm) in

diameter through the door, have at least a 0.25-inch-thick (6.4 mm) glass disc and the holder is of metal that will not melt out where subject to temperatures of 1,700°F (927°C).

2. Corridor door assemblies in occupancies of Group I-2 shall be in accordance with Section 407.3.1.

3. Unprotected openings shall be permitted for corridors in multi-theater complexes where each motion picture auditorium has at least one-half of its required exit or exit access doorways opening directly to the exterior or into an exit passageway.

4. Horizontal sliding doors in smoke barriers that comply with Sections 408.3 and 408.8.4 in occupancies in Group I-3.

TABLE 715.4
FIRE DOOR AND FIRE SHUTTER FIRE PROTECTION RATINGS

TYPE OF ASSEMBLY	REQUIRED ASSEMBLY RATING (hours)	MINIMUM FIRE DOOR AND FIRE SHUTTER ASSEMBLY RATING (hours)
Fire walls and fire barriers having a required fire-resistance rating greater than 1 hour	4 3 2 1 ½	3 3[a] 1 ½ 1 ½
Fire barriers having a required fire-resistance rating of 1 hour: Shaft, exit enclosure and exit passageway walls Other fire barriers	1 1	1 ¾
Fire partitions: Corridor walls Other fire partitions	 1 0.5 1 0.5	 1/3 [b] 1/3 [b] ¾ 1/3
Exterior walls	3 2 1	1 ½ 1 ½ ¾
Smoke barriers	1	1/3 [b]

a. Two doors, each with a fire protection rating of 1 ½ hours, installed on opposite sides of the same opening in a fire wall, shall be deemed equivalent in fire protection rating to one 3-hour fire door.
b. For testing requirements, see Section 715.4.3.

715.4.3.1 Smoke and draft control. Fire door assemblies shall also meet the requirements for a smoke and draft control door assembly tested in accordance with UL 1784. The air leakage rate of the door assembly shall not exceed 3.0 cubic feet per minute per square foot (0.01524 $m^3/s \cdot m^2$)

of door opening at 0.10 inch (24.9 Pa) of water for both the ambient temperature and elevated temperature tests. Louvers shall be prohibited. Installation of smoke doors shall be in accordance with NFPA 105.

715.4.3.2 Glazing in door assemblies. In a 20-minute fire door assembly, the glazing material in the door itself shall have a minimum fire-protection-rated glazing of 20 minutes and shall be exempt from the hose stream test. Glazing material in any other part of the door assembly, including transom lights and sidelights, shall be tested in accordance with NFPA 257 or UL 9, including the hose stream test, in accordance with Section 715.5.

715.4.4 Doors in exit enclosures and exit passageways. Fire door assemblies in exit enclosures and exit passageways shall have a maximum transmitted temperature end point of not more than 450ºF (250ºC) above ambient at the end of 30 minutes of standard fire test exposure.

Exception: The maximum transmitted temperature rise is not required in buildings equipped throughout with an automatic sprinkler system installed in accordance with Section 903.3.1.1 or 903.3.1.2.

715.4.4.1 Glazing in doors. Fire-protection-rated glazing in excess of 100 square inches (0.065 m^2) shall be permitted in fire door assemblies when tested as components of the door assemblies and not as glass lights, and shall have a maximum transmitted temperature rise of 450ºF (250ºC) in accordance with Section 715.4.4.

Exception: The maximum transmitted temperature rise is not required in buildings equipped throughout with an automatic sprinkler system installed in accordance with Section 903.3.1.1 or 903.3.1.2.

715.4.5 Fire door frames with transom lights and sidelights. Door frames with transom lights, sidelights, or both, shall be permitted where a ¾-hour fire protection rating or less is required in accordance with Table 715.4. Where a fire protection rating exceeding ¾-hour is required in accordance with Table 715.4, fire door frames with transom lights, sidelights, or both, shall be permitted where installed with fire-resistance-rated glazing tested as an assembly in accordance with ASTM E119 or UL 263.

715.4.6 Labeled protective assemblies. Fire door assemblies shall be labeled by an approved agency. The labels shall comply with NFPA 80, and shall be permanently affixed to the door or frame.

715.4.6.1 Fire door labeling requirements. Fire doors shall be labeled showing the name of the manufacturer or other identification readily traceable back to the manufacturer, the name or trademark of the *approved* inspection agency, the fire protection rating and, where required for fire doors in exit enclosures and exit passageways by Section 715.4.4, the maximum transmitted temperature end point. Smoke and draft control doors complying with UL 1784 shall be labeled as such and shall also comply with Section 715.4.6.3. Labels shall be approved and permanently affixed. The label shall be applied at the factory or location where fabrication and assembly are performed.

715.4.6.2 Oversized doors. Oversized fire doors shall bear an oversized fire door label by an approved agency or shall be provided with a certificate of inspection furnished by an approved testing agency. When a certificate of inspection is furnished by an approved testing agency, the certificate shall state that the door conforms to the requirements of design, materials and construction, but has not been subjected to the fire test.

715.4.6.3 Smoke and draft control door labeling requirements. Smoke and draft control doors complying with UL 1784 shall be labeled in accordance with Section 715.4.6.1 and shall show the letter "S" on the fire rating label of the door. This marking shall indicate that the door and frame assembly are in compliance when listed or labeled gasketing is also installed.

715.4.6.4 Fire door frame labeling requirements. Fire door frames shall be labeled showing the names of the manufacturer and the *approved* inspection agency.

715.4.7 Glazing material. Fire-protection-rated glazing conforming to the opening protection requirements in Section 715.4 shall be permitted in fire door assemblies.

715.4.7.1 Size limitations. Fire-protection-rated glazing used in fire doors shall comply with the size limitations of NFPA 80.

Exceptions:

1 Fire-protection-rated glazing in fire doors located in fire walls shall be prohibited except where serving in a fire door in a horizontal exit, a self-closing swinging door shall be permitted to have a vision panel of not more than 100 square inches (0.065 m^2) without a dimension exceeding 10 inches (254 mm).

2 Fire-protection-rated glazing shall not be installed in fire doors having a 1½-hour fire protection rating intended for installation in fire barriers, unless the glazing is not more than 100 square inches (0.065 m^2) in area.

715.4.7.2 Exit and elevator protectives. Approved fire-protection-rated glazing used in fire door assemblies in elevator and exit enclosures shall be so located as to furnish clear vision of the passageway or approach to the elevator, ramp or stairway.

715.4.7.3 Labeling. Fire-protection-rated glazing shall bear a label or other identification showing the name of the manufacturer, the test standard and information required in Section 715.5.9.1 that shall be issued by an approved agency and shall be permanently affixed to the glazing.

715.4.7.3.1 Identification. For fire protection-rated glazing, the label shall bear the following four-part identification: "D – H or NH – T or NT – XXX." "D" indicates that the glazing shall be used in fire door assemblies and that the glazing meets the fire protection requirements of NFPA 252. "H" shall indicate that the glazing meets the hose stream requirements of NFPA 252. "NH" shall indicate that the glazing does not meet the hose stream requirements of the test. "T" shall indicate that the glazing meets the temperature requirements of Section 715.4.4.1. "NT" shall indicate that the glazing does not meet the temperature requirements of Section 715.4.4.1. The placeholder "XXX" shall specify the fire-protection-rating period, in minutes.

715.4.7.4 Safety glazing. Fire-protection-rated glazing installed in fire doors in areas subject to human impact in hazardous locations shall comply with Chapter 24.

715.4.8 Door closing. Fire doors shall be self-or automatic-closing in accordance with this section.

Exceptions:

1. Fire doors located in common walls separating sleeping units in Group R-1 shall be permitted without automatic- or self-closing devices.

2. The elevator car doors and the associated hoistway enclosure doors at the floor level designated for recall in accordance with Section 3003.2 shall be permitted to remain open during Phase I emergency recall operation.

715.4.8.1 Latch required. Unless otherwise specifically permitted, single fire doors and both leaves of pairs of side-hinged swinging fire doors shall be provided with an active latch bolt that will secure the door when it is closed.

715.4.8.2 Automatic-closing fire door assemblies. Automatic-closing fire door assemblies shall be self-closing in accordance with NFPA 80.

715.4.8.3 Smoke-activated doors. Automatic-closing doors installed in the following locations shall be automatic-closing by the actuation of smoke detectors installed in accordance with Section 907.3 or by loss of power to the smoke detector or hold-open device. Doors that are automatic-closing by smoke detection shall not have more than a 10-second delay before the door starts to close after the smoke detector is actuated:

1. Doors installed across a corridor.

2. Doors that protect openings in exits or corridors required to be of fire-resistance-rated construction.

3. Doors that protect openings in walls that are capable of resisting the passage of smoke in accordance with Section 508.2.5.2.

4. Doors installed in smoke barriers in accordance with Section 710.5.

5. Doors installed in fire partitions in accordance with Section 709.6.

6. Doors installed in a fire wall in accordance with Section 706.8.

7. Doors installed in shaft enclosures in accordance with Section 708.7.

8. Doors installed in refuse and laundry chutes and access and termination rooms in accordance with Section 708.13.

9. Doors installed in the walls for compartmentation of underground buildings in accordance with Section 405.4.2.

10. Doors installed in the elevator lobby walls of underground buildings in accordance with Section 405.4.3.

11. Doors installed in smoke partitions in accordance with Section 711.5.3.

715.4.8.4 Doors in pedestrian ways. Vertical sliding or vertical rolling steel fire doors in openings through which pedestrians travel shall be heat activated or activated by smoke detectors with alarm verification.

715.4.9 Swinging fire shutters. Where fire shutters of the swinging type are installed in exterior openings, not less than one row in every three vertical rows shall be arranged to be readily opened from the outside, and shall be identified by distinguishing marks or letters not less than 6 inches (152 mm) high.

715.4.10 Rolling fire shutters. Where fire shutters of the rolling type are installed, such shutters shall include approved automatic-closing devices.

715.5 Fire-protection-rated glazing. Glazing in fire window assemblies shall be fire-protection rated in accordance with this section and Table 715.5. Glazing in fire door assemblies shall comply with Section 715.4.7. Fire-protection-rated glazing shall be tested in accordance with and shall meet the acceptance criteria of NFPA 257 or UL 9. Fire-protection-rated glazing shall also comply with NFPA 80. Openings in nonfire-resistance-rated exterior wall assemblies that require protection in accordance with Section 705.3, 705.8, 705.8.5 or 705.8.6 shall have a fire-protection rating of not less than ¾ hour.

Exceptions:

1. Wired glass in accordance with Section 715.5.4.

2. Fire protection-rated glazing in 0.5-hour fire-resistance-rated partitions is permitted to have an 0.33-hour fire-protection rating.

TABLE 715.5
FIRE WINDOW ASSEMBLY FIRE PROTECTION RATINGS

TYPE OF ASSEMBLY		REQUIRED ASSEMBLY RATING (hours)	MINIMUM FIRE WINDOW ASSEMBLY RATING (hours)
Interior walls:	Fire walls	All	NP[a]
	Fire barriers	> 1 1	NP[a] ¾
	Smoke barriers	1	¾
	Fire partitions	1 ½	¾ 1/3
Exterior walls		> 1 1	1 ½ ¾
Party wall		All	NP

NP = Not Permitted.
a. Not permitted except as specified in Section 715.2.

715.5.1 Testing under positive pressure. NFPA 257 or UL 9 shall evaluate fire-protection-rated glazing under positive pressure. Within the first 10 minutes of a test, the pressure in the furnace shall be adjusted so at least two-thirds of the test specimen is above the neutral pressure plane, and the neutral pressure plane shall be maintained at that height for the balance of the test.

715.5.2 Nonsymmetrical glazing systems. Nonsymmetrical fire-protection-rated glazing systems in fire partitions, fire barriers or in exterior walls with a fire separation distance of 5 feet (1524 mm) or less pursuant to Section 705 shall be tested with both faces exposed to the furnace, and the assigned fire protection rating shall be the shortest duration obtained from the two tests conducted in compliance with NFPA 257 or UL 9.

715.5.3 Safety glazing. Fire-protection-rated glazing installed in fire window assemblies in areas subject to human impact in hazardous locations shall comply with Chapter 24.

715.5.4 Wired glass. Steel window frame assemblies of 0.125-inch (3.2 mm) minimum solid section or of not less than nominal 0.048-inch-thick (1.2 mm)

formed sheet steel members fabricated by pressing, mitering, riveting, interlocking or welding and having provision for glazing with ¼-inch (6.4 mm) wired glass where securely installed in the building construction and glazed with ¼-inch (6.4 mm) labeled wired glass shall be deemed to meet the requirements for a ¾-hour fire window assembly. Wired glass panels shall conform to the size limitations set forth in Table 715.5.4.

715.5.5 Nonwired glass. Glazing other than wired glass in fire window assemblies shall be fire-protection-rated glazing installed in accordance with and complying with the size limitations set forth in NFPA 80.

715.5.6 Installation. Fire-protection-rated glazing shall be in the fixed position or be automatic-closing and shall be installed in approved frames.

FIRE AND SMOKE PROTECTION FEATURES
TABLE 715.5.4 LIMITING SIZES OF WIRED GLASS PANELS

OPENING FIRE PROTECTION RATING	MAXIMUM AREA (square inches)	MAXIMUM HEIGHT (inches)	MAXIMUM WIDTH (inches)
3 hours	0	0	0
1 ½-hour doors in exterior walls	0	0	0
1 and 1 ½ hours	100	33	10
¾ hour	1,296	54	54
20 minutes	Not Limited	Not Limited	Not Limited
Fire window assemblies	1,296	54	54

For SI: 1 inch = 25.4 mm, 1 square inch = 645.2 mm^2.

715.5.7 Window mullions. Metal mullions that exceed a nominal height of 12 feet (3658 mm) shall be protected with materials to afford the same fire-resistance rating as required for the wall construction in which the protective is located.

715.5.8 Interior fire window assemblies. Fire-protection-rated glazing used in fire window assemblies located in fire partitions and fire barriers shall be limited to use in assemblies with a maximum fire-resistance rating of 1 hour in accordance with this section.

715.5.8.1 Where ¾-hour fire protection window assemblies permitted. Fire-protection-rated glazing requiring 45-minute opening protection in accordance with Table 715.5 shall be limited to fire partitions designed in

accordance with Section 709 and fire barriers utilized in the applications set forth in Sections 707.3.6 and 707.3.8 where the fire-resistance rating does not exceed 1 hour.

715.5.8.2 Area limitations. The total area of windows shall not exceed 25 percent of the area of a common wall with any room.

715.5.9 Labeling requirements. Fire-protection-rated glazing shall bear a label or other identification showing the name of the manufacturer, the test standard and information required in Section 715.5.9.1 that shall be issued by an approved agency and shall be permanently affixed to the glazing.

715.5.9.1 Identification. For fire-protection-rated glazing, the label shall bear the following two-part identification: "OH – XXX." "OH" indicates that the glazing meets both the fire protection and the hose-stream requirements of NFPA 257 or UL 9 and is permitted to be used in openings. "XXX" represents the fire-protection rating period, in minutes, that was tested.

SECTION 716
DUCTS AND AIR TRANSFER OPENINGS

716.1 General. The provisions of this section shall govern the protection of duct penetrations and air transfer openings in assemblies required to be protected.

716.1.1 Ducts that penetrate fire-resistance-rated assemblies without dampers. Ducts that penetrate fire-resistance-rated assemblies and are not required by this section to have dampers shall comply with the requirements of Sections 713.2 through 713.3.3. Ducts that penetrate horizontal assemblies not required to be contained within a shaft and not required by this section to have dampers shall comply with the requirements of Sections 713.4 through 713.4.2.2.

716.1.1.1 Ducts that penetrate nonfire-resistance-rated assemblies. The space around a duct penetrating a nonfire-resistance-rated floor assembly shall comply with Section 716.6.3.

716.2 Installation. Fire dampers, smoke dampers, combination fire/smoke dampers and ceiling radiation dampers located within air distribution and smoke control systems shall be installed in accordance with the requirements of this section, the manufacturer's installation instructions and the dampers' listing.

716.2.1 Smoke control system. Where the installation of a fire damper will interfere with the operation of a required smoke control system in accordance with Section 909, approved alternative protection shall be utilized. Where mechanical systems including ducts and dampers utilized for normal building ventilation serve as part of the smoke control system, the expected performance of these systems in smoke control mode shall be addressed in the rational analysis required by Section 909.4.

716.2.2 Hazardous exhaust ducts. Fire dampers for hazardous exhaust duct systems shall comply with the *mechanical code*.

716.3 Damper testing, ratings and actuation. Damper testing, ratings and actuation shall be in accordance with Sections 716.3.1 through 716.3.3.

716.3.1 Damper testing. Dampers shall be listed and bear the label of an approved testing agency indicating compliance with the standards in this section. Fire dampers shall comply with the requirements of UL 555. Only fire dampers labeled for use in dynamic systems shall be installed in heating, ventilation and air-conditioning systems designed to operate with fans on during a fire. Smoke dampers shall comply with the requirements of UL 555S. Combination fire/smoke dampers shall comply with the requirements of both UL 555 and UL 555S. Ceiling radiation dampers shall comply with the requirements of UL 555C.

716.3.2 Damper rating. Damper ratings shall be in accordance with Sections 716.3.2.1 through 716.3.2.3.

716.3.2.1 Fire damper ratings. Fire dampers shall have the minimum fire protection rating specified in Table 716.3.2.1 for the type of penetration.

716.3.2.2 Smoke damper ratings. Smoke damper leakage ratings shall not be less than Class II. Elevated temperature ratings shall not be less than 250°F (121°C).

TABLE 716.3.2.1
FIRE DAMPER RATING

TYPE OF PENETRATION	MINIMUM DAMPER RATING (hours)
Less than 3-hour fire-resistance-rated assemblies	1.5

3-hour or greater fire-resistance-rated assemblies	3

716.3.2.3 Combination fire/smoke damper ratings. Combination fire/smoke dampers shall have the minimum fire protection rating specified for fire dampers in Table 716.3.2.1 for the type of penetration and shall also have a minimum Class II leakage rating and a minimum elevated temperature rating of 250°F (121°C).

716.3.3 Damper actuation. Damper actuation shall be in accordance with Sections 716.3.3.1 through 716.3.3.4 as applicable.

716.3.3.1 Fire damper actuation device. The fire damper actuation device shall meet one of the following requirements:

1. The operating temperature shall be approximately 50°F (10°C) above the normal temperature within the duct system, but not less than 160°F (71°C).

2. The operating temperature shall be not more than 350°F (177°C) where located in a smoke control system complying with Section 909.

716.3.3.2 Smoke damper actuation. The smoke damper shall close upon actuation of a listed smoke detector or detectors installed in accordance with Section 907.3 and one of the following methods, as applicable:

1. Where a smoke damper is installed within a duct, a smoke detector shall be installed in the duct within 5 feet (1524 mm) of the damper with no air outlets or inlets between the detector and the damper. The detector shall be listed for the air velocity, temperature and humidity anticipated at the point where it is installed. Other than in mechanical smoke control systems, dampers shall be closed upon fan shutdown where local smoke detectors require a minimum velocity to operate.

2. Where a smoke damper is installed above smoke barrier doors in a smoke barrier, a spot-type detector listed for releasing service shall be installed on either side of the smoke barrier door opening.

3. Where a smoke damper is installed within an air transfer opening

in a wall, a spot-type detector listed for releasing service shall be installed within 5 feet (1524 mm) horizontally of the damper.

4. Where a smoke damper is installed in a corridor wall or ceiling, the damper shall be permitted to be controlled by a smoke detection system installed in the corridor.

5. Where a total-coverage smoke detector system is provided within areas served by a heating, ventilation and air-conditioning (HVAC) system, smoke dampers shall be permitted to be controlled by the smoke detection system.

716.3.3.3 Combination fire/smoke damper actuation. Combination fire/smoke damper actuation shall be in accordance with Sections 716.3.3.1 and 716.3.3.2. Combination fire/smoke dampers installed in smoke control system shaft penetrations shall not be activated by local area smoke detection unless it is secondary to the smoke management system controls.

716.3.3.4 Ceiling radiation damper actuation. The operating temperature of a ceiling radiation damper actuation device shall be 50°F (27.8°C) above the normal temperature within the duct system, but not less than 160°F (71°C).

716.4 Access and identification. Fire and smoke dampers shall be provided with an approved means of access, which is large enough to permit inspection and maintenance of the damper and its operating parts. The access shall not affect the integrity of fire-resistance-rated assemblies. The access openings shall not reduce the fire-resistance rating of the assembly. Access points shall be permanently identified on the exterior by a label having letters not less than ½ inch (12.7 mm) in height reading: FIRE/SMOKE DAMPER, SMOKE DAMPER or FIRE DAMPER. Access doors in ducts shall be tight fitting and suitable for the required duct construction.

716.5 Where required. Fire dampers, smoke dampers and combination fire/smoke dampers shall be provided at the locations prescribed in Sections 716.5.1 through 716.5.7 and 716.6. Where an assembly is required to have both fire dampers and smoke dampers, combination fire/smoke dampers or a fire damper and a smoke damper shall be required.

716.5.1 Fire walls. Ducts and air transfer openings permitted in fire walls in accordance with Section 706.11 shall be protected with listed fire dampers installed in accordance with their listing.

716.5.1.1 Horizontal exits. A listed smoke damper designed to resist the passage of smoke shall be provided at each point a duct or air transfer opening penetrates a fire wall that serves as a horizontal exit.

716.5.2 Fire barriers. Ducts and air transfer openings of fire barriers shall be protected with approved fire dampers installed in accordance with their listing. Ducts and air transfer openings shall not penetrate exit enclosures and exit passageways except as permitted by Sections 1022.4 and 1023.6, respectively.

Exception: Fire dampers are not required at penetrations of fire barriers where any of the following apply:

1. Penetrations are tested in accordance with ASTM E 119 or UL 263 as part of the fire-resistance-rated assembly.

2. Ducts are used as part of an approved smoke control system in accordance with Section 909 and where the use of a fire damper would interfere with the operation of a smoke control system.

3. Such walls are penetrated by ducted HVAC systems, have a required fire-resistance rating of 1 hour or less, are in areas of other than Group H and are in buildings equipped throughout with an automatic sprinkler system in accordance with Section 903.3.1.1 or 903.3.1.2. For the purposes of this exception, a ducted HVAC system shall be a duct system for conveying supply, return or exhaust air as part of the structure's HVAC system. Such a duct system shall be constructed of sheet steel not less than No. 26 gage thickness and shall be continuous from the air-handling appliance or equipment to the air outlet and inlet terminals.

716.5.2.1 Horizontal exits. A listed smoke damper designed to resist the passage of smoke shall be provided at each point a duct or air transfer opening penetrates a fire barrier that serves as a horizontal exit.

716.5.3 Shaft enclosures. Shaft enclosures that are permitted to be penetrated by ducts and air transfer openings shall be protected with approved fire and smoke dampers installed in accordance with their listing.

Exceptions:

1. Fire dampers are not required at penetrations of shafts where:

   1.1. Steel exhaust subducts are extended at least 22 inches (559 mm) vertically in exhaust shafts, provided there is a continuous airflow upward to the outside; or

   1.2. Penetrations are tested in accordance with ASTM E 119 or UL 263 as part of the fire-resistance-rated assembly; or

   1.3. Ducts are used as part of an approved smoke control system designed and installed in accordance with Section 909 and where the fire damper will interfere with the operation of the smoke control system; or

   1.4. The penetrations are in parking garage exhaust or supply shafts that are separated from other building shafts by not less than 2-hour fire-resistance-rated construction.

2. In Group B and R occupancies equipped throughout with an automatic sprinkler system in accordance with Section 903.3.1.1, smoke dampers are not required at penetrations of shafts where:

   2.1. Kitchen, clothes dryer, bathroom and toilet room exhaust openings are installed with steel exhaust subducts, having a minimum wall thickness of 0.187-inch (0.4712 mm) (No. 26 gage);

   2.2. The subducts extend at least 22 inches (559 mm) vertically; and

   2.3 An exhaust fan is installed at the upper terminus of the shaft that is powered continuously in accordance with the provisions of Section 909.11, so as to maintain a continuous upward airflow to the outside.

3. Smoke dampers are not required at penetration of exhaust or supply shafts in parking garages that are separated from other building shafts by not less than 2-hour fire-resistance-rated construction.
4. Smoke dampers are not required at penetrations of shafts where ducts are used as part of an approved mechanical smoke control system designed in accordance with Section 909 and where the smoke damper will interfere with the operation of the smoke control system.
5. Fire dampers and combination fire/smoke dampers are not required in kitchen and clothes dryer exhaust systems when installed in accordance with the *mechanical code*.

716.5.4 Fire partitions. Ducts and air transfer openings that penetrate fire partitions shall be protected with listed fire dampers installed in accordance with their listing.

Exceptions: In occupancies other than Group H, fire dampers are not required where any of the following apply:

1. Corridor walls in buildings equipped throughout with an automatic sprinkler system in accordance with Section 903.3.1.1 or 903.3.1.2 and the duct is protected as a through penetration in accordance with Section 713.

2. Tenant partitions in covered mall buildings where the walls are not required by provisions elsewhere in the code to extend to the underside of the floor or roof sheathing, slab or deck above.

3. The duct system is constructed of approved materials in accordance with the *mechanical code* and the duct penetrating the wall complies with all of the following requirements:

   3.1. The duct shall not exceed 100 square inches (0.06 m^2).

   3.2. The duct shall be constructed of steel a minimum of 0.0217 inch (0.55 mm) in thickness.

   3.3. The duct shall not have openings that communicate the corridor with adjacent spaces or rooms.

3.4. The duct shall be installed above a ceiling.

3.5. The duct shall not terminate at a wall register in the fire-resistance-rated wall.

3.6. A minimum 12-inch-long (305 mm) by 0.060-inch-thick (1.52 mm) steel sleeve shall be centered in each duct opening. The sleeve shall be secured to both sides of the wall and all four sides of the sleeve with minimum 1 ½-inch by 1½-inch by 0.060-inch (38 mm by 38 mm by 1.52 mm) steel retaining angles. The retaining angles shall be secured to the sleeve and the wall with No. 10 (M5) screws. The annular space between the steel sleeve and the wall opening shall be filled with mineral wool batting on all sides.

4. Such walls are penetrated by ducted HVAC systems, have a required fire-resistance rating of 1 hour or less, and are in buildings equipped throughout with an automatic sprinkler system in accordance with Section 903.3.1.1 or 903.3.1.2. For the purposes of this exception, a ducted HVAC system shall be a duct system for conveying supply, return or exhaust air as part of the structure's HVAC system. Such a duct system shall be constructed of sheet steel not less than No. 26 gage thickness and shall be continuous from the air-handling appliance or equipment to the air outlet and inlet terminals.

716.5.4.1 Corridors. A listed smoke damper designed to resist the passage of smoke shall be provided at each point a duct or air transfer opening penetrates a corridor enclosure required to have smoke and draft control doors in accordance with Section 715.4.3.

Exceptions:

1. Smoke dampers are not required where the building is equipped throughout with an approved smoke control system in accordance with Section 909, and smoke dampers are not necessary for the operation and control of the system.

2. Smoke dampers are not required in corridor penetrations where the duct is constructed of steel not less than 0.019 inch (0.48 mm) in thickness and there are no openings serving the corridor.

716.5.5 Smoke barriers. A listed smoke damper designed to resist the passage of smoke shall be provided at each point a duct or air transfer opening penetrates a smoke barrier. Smoke dampers and smoke damper actuation methods shall comply with Section 716.3.3.2.

Exception: Smoke dampers are not required where the openings in ducts are limited to a single smoke compartment and the ducts are constructed of steel.

716.5.6 Exterior walls. Ducts and air transfer openings in fire-resistance-rated exterior walls required to have protected openings in accordance with Section 705.10 shall be protected with listed fire dampers installed in accordance with their listing.

716.5.7 Smoke partitions. A listed smoke damper designed to resist the passage of smoke shall be provided at each point that an air transfer opening penetrates a smoke partition. Smoke dampers and smoke damper actuation methods shall comply with Section 716.3.3.2.

Exception: Where the installation of a smoke damper will interfere with the operation of a required smoke control system in accordance with Section 909, approved alternative protection shall be utilized.

716.6 Horizontal assemblies. Penetrations by ducts and air transfer openings of a floor, floor/ceiling assembly or the ceiling membrane of a roof/ceiling assembly shall be protected by a shaft enclosure that complies with Section 708 or shall comply with Sections 716.6.1 through 716.6.3.

716.6.1 Through penetrations. In occupancies other than Groups I-2 and I-3, a duct constructed of approved materials in accordance with the *mechanical code* that penetrates a fire-resistance-rated floor/ceiling assembly that connects not more than two stories is permitted without shaft enclosure protection, provided a listed fire damper is installed at the floor line or the duct is protected in accordance with Section 713.4. For air transfer openings, see Exception 7 to Section 708.2.

Exception: A duct is permitted to penetrate three floors or less without a fire damper at each floor, provided such duct meets all of the following requirements:

1. The duct shall be contained and located within the cavity of a wall and shall be constructed of steel having a minimum wall thickness of 0.0187 inches (0.4712 mm) (No. 26 gage).

2. The duct shall open into only one dwelling or sleeping unit and the duct system shall be continuous from the unit to the exterior of the building.

3. The duct shall not exceed 4-inch (102 mm) nominal diameter and the total area of such ducts shall not exceed 100 square inches (0.065 m^2) in any 100 square feet (9.3 m^2) of floor area.

4. The annular space around the duct is protected with materials that prevent the passage of flame and hot gases sufficient to ignite cotton waste where subjected to ASTM E 119 or UL 263 time-temperature conditions under a minimum positive pressure differential of 0.01 inch (2.49 Pa) of water at the location of the penetration for the time period equivalent to the fire-resistance rating of the construction penetrated.

5. Grille openings located in a ceiling of a fire-resistance-rated floor/ceiling or roof/ceiling assembly shall be protected with a listed ceiling radiation damper installed in accordance with Section 716.6.2.1.

716.6.2 Membrane penetrations. Ducts and air transfer openings constructed of approved materials in accordance with the *mechanical code* that penetrate the ceiling membrane of a fire-resistance-rated floor/ceiling or roof/ceiling assembly shall be protected with one of the following:

1. A shaft enclosure in accordance with Section 708.

2. A listed ceiling radiation damper installed at the ceiling line where a duct penetrates the ceiling of a fire-resistance-rated floor/ceiling or roof/ceiling assembly.

3. A listed ceiling radiation damper installed at the ceiling line where a diffuser with no duct attached penetrates the ceiling of a fire-resistance-rated floor/ceiling or roof/ceiling assembly.

716.6.2.1 Ceiling radiation dampers. Ceiling radiation dampers shall be tested as part of a fire-resistance-rated floor/ceiling or roof/ceiling assembly in accordance with ASTM E 119 or UL 263. Ceiling radiation dampers shall be installed in accordance with the details listed in the fire-resistance-rated assembly and the manufacturer's installation instructions and the listing. Ceiling radiation dampers are not required where either of the following applies:

1. Tests in accordance with ASTM E 119 or UL 263 have shown that ceiling radiation dampers are not necessary in order to maintain the fire-resistance rating of the assembly.

2. Where exhaust duct penetrations are protected in accordance with Section 713.4.1.2, are located within the cavity of a wall and do not pass through another dwelling unit or tenant space.

716.6.3 Nonfire-resistance-rated floor assemblies. Duct systems constructed of approved materials in accordance with the *mechanical code* that penetrate nonfire-resistance-rated floor assemblies shall be protected by any of the following methods:

1. A shaft enclosure in accordance with Section 708.

2. The duct connects not more than two stories, and the annular space around the penetrating duct is protected with an approved noncombustible material that resists the free passage of flame and the products of combustion.

3. The duct connects not more than three stories, and the annular space around the penetrating duct is protected with an approved noncombustible material that resists the free passage of flame and the products of combustion and a fire damper is installed at each floor line.

   Exception: Fire dampers are not required in ducts within individual residential dwelling units.

716.7 Flexible ducts and air connectors. Flexible ducts and air connectors shall not pass through any fire-resistance-rated assembly. Flexible air connectors shall not pass through any wall, floor or ceiling.

SECTION 717
CONCEALED SPACES

717.1 General. Fireblocking and draftstopping shall be installed in combustible concealed locations in accordance with this section. Fireblocking shall comply with Section 717.2. Draftstopping in floor/ceiling spaces and attic spaces shall comply with Sections 717.3 and 717.4, respectively. The permitted use of combustible materials in concealed spaces of buildings of Type I or II construction shall be limited to the applications indicated in Section 717.5.

717.2 Fireblocking. In combustible construction, fireblocking shall be installed to cut off concealed draft openings (both vertical and horizontal) and shall form an effective barrier between floors, between a top story and a roof or attic space. Fireblocking shall be installed in the locations specified in Sections 717.2.2 through 717.2.7.

717.2.1 Fireblocking materials. Fireblocking shall consist of the following materials:

1. Two-inch (51 mm) nominal lumber.

2. Two thicknesses of 1-inch (25 mm) nominal lumber with broken lap joints.

3. One thickness of 0.719-inch (18.3 mm) wood structural panels with joints backed by 0.719-inch (18.3 mm) wood structural panels.

4. One thickness of 0.75-inch (19.1 mm) particleboard with joints backed by 0.75-inch (19 mm) particleboard.

5. One-half-inch (12.7 mm) gypsum board.

6. One-fourth-inch (6.4 mm) cement-based millboard.

7. Batts or blankets of mineral wool, mineral fiber or other approved materials installed in such a manner as to be securely retained in place.

717.2.1.1 Batts or blankets of mineral wool or mineral fiber. Batts or blankets of mineral wool or mineral fiber or other approved nonrigid materials shall be permitted for compliance with the 10-foot (3048 mm) horizontal fireblocking in walls constructed using parallel rows of studs or staggered studs.

717.2.1.2 Unfaced fiberglass. Unfaced fiberglass batt insulation used as fireblocking shall fill the entire cross section of the wall cavity to a minimum height of 16 inches (406 mm) measured vertically. When piping, conduit or similar obstructions are encountered, the insulation shall be packed tightly around the obstruction.

717.2.1.3 Loose-fill insulation material. Loose-fill insulation material, insulating foam sealants and caulk materials shall not be used as a fireblock unless specifically tested in the form and manner intended for use to demonstrate its ability to remain in place and to retard the spread of fire and hot gases.

717.2.1.4 Fireblocking integrity. The integrity of fireblocks shall be maintained.

717.2.1.5 Double stud walls. Batts or blankets of mineral or glass fiber or other approved nonrigid materials shall be allowed as fireblocking in walls constructed using parallel rows of studs or staggered studs.

717.2.2 Concealed wall spaces. Fireblocking shall be provided in concealed spaces of stud walls and partitions, including furred spaces, and parallel rows of studs or staggered studs, as follows:

1. Vertically at the ceiling and floor levels.

2. Horizontally at intervals not exceeding 10 feet (3048 mm).

717.2.3 Connections between horizontal and vertical spaces. Fireblocking shall be provided at interconnections between concealed vertical stud wall or partition spaces and concealed horizontal spaces created by an assembly of floor joists or trusses, and between concealed vertical and horizontal spaces such as occur at soffits, drop ceilings, cove ceilings and similar locations.

717.2.4 Stairways. Fireblocking shall be provided in concealed spaces between stair stringers at the top and bottom of the run. Enclosed spaces under stairs shall also comply with Section 1009.6.3.

717.2.5 Ceiling and floor openings. Where required by Exception 6 of Section 708.2, Exception 1 of Section 713.4.1.2 or Section 713.4.2, fireblocking of the annular space around vents, pipes, ducts, chimneys and fireplaces at ceilings and floor levels shall be installed with a material specifically tested in the form and manner intended for use to demonstrate its ability to remain in place and resist the free passage of flame and the products of combustion.

717.2.5.1 Factory-built chimneys and fireplaces. Factory-built chimneys and fireplaces shall be fireblocked in accordance with UL 103 and UL 127.

717.2.6 Architectural trim. Fireblocking shall be installed within concealed spaces of exterior wall finish and other exterior architectural elements where permitted to be of combustible construction as specified in Section 1406 or where erected with combustible frames, at maximum intervals of 20 feet (6096 mm), so that there will be no open space exceeding 100 square feet (9.3 m^3). Where wood furring strips are used, they shall be of approved wood of natural decay resistance or preservative-treated wood. If noncontinuous, such elements shall have closed ends, with at least 4 inches (102 mm) of separation between sections.

Exceptions:

1. *Deleted.*

2. Fireblocking shall not be required where installed on noncombustible framing and the face of the exterior wall finish exposed to the concealed space is covered by one of the following materials:

   2.1. Aluminum having a minimum thickness of 0.019 inch (0.5 mm).

   2.2. Corrosion-resistant steel having a base metal thickness not less than 0.016 inch (0.4 mm) at any point.

   2.3. Other approved noncombustible materials.

717.2.7 Concealed sleeper spaces. Where wood sleepers are used for laying wood flooring on masonry or concrete fire-resistance-rated floors, the space between the floor slab and the underside of the wood flooring shall be filled with an approved material to resist the free passage of flame and products of combustion or fireblocked in such a manner that there will be no open spaces under the flooring that will exceed 100 square feet (9.3 m^2) in area and such space shall be filled solidly under permanent partitions so that there is no communication under the flooring between adjoining rooms.

Exceptions:

1. Fireblocking is not required for slab-on-grade floors in gymnasiums.

2. Fireblocking is required only at the juncture of each alternate lane and at the ends of each lane in a bowling facility.

717.3 Draftstopping in floors. In combustible construction, draftstopping shall be installed to subdivide floor/ceiling assemblies in the locations prescribed in Sections 717.3.2 through 717.3.3.

717.3.1 Draftstopping materials. Draftstopping materials shall not be less than ½-inch (12.7 mm) gypsum board, $^3/_8$-inch (9.5 mm) wood structural panel, $^3/_8$-inch (9.5 mm) particleboard, 1-inch (25-mm) nominal lumber, cement fiberboard, batts or blankets of mineral wool or glass fiber, or other approved materials adequately supported. The integrity of draftstops shall be maintained.

717.3.2 Groups R. Draftstopping shall be provided in floor/ceiling spaces in Group R buildings. Draftstopping shall be located above and in line with the dwelling unit and sleeping unit separations.

Exceptions:

1. Draftstopping is not required in buildings equipped throughout with an automatic sprinkler system in accordance with Section 903.3.1.1.

2. Draftstopping is not required in buildings equipped throughout with an automatic sprinkler system in accordance with Section

903.3.1.2, provided that automatic sprinklers are also installed in the combustible concealed spaces.

717.3.3 Other groups. In other groups, draftstopping shall be installed so that horizontal floor areas do not exceed 1,000 square feet (93 m^2).

Exception: Draftstopping is not required in buildings equipped throughout with an automatic sprinkler system in accordance with Section 903.3.1.1.

717.4 Draftstopping in attics. In combustible construction, draftstopping shall be installed to subdivide attic spaces and concealed roof spaces in the locations prescribed in Sections 717.4.2 and 717.4.3. Ventilation of concealed roof spaces shall be maintained in accordance with Section 1203.2.

717.4.1 Draftstopping materials. Materials utilized for draftstopping of attic spaces shall comply with Section 717.3.1.

717.4.1.1 Openings. Openings in the partitions shall be protected by self-closing doors with automatic latches constructed as required for the partitions.

717.4.2 Groups R-1 and R-2. Draftstopping shall be provided in attics, mansards, overhangs or other concealed roof spaces of Group R-1 *and Group R-2* buildings. Draftstopping shall be installed above, and in line with, sleeping unit and dwelling unit separation walls that do not extend to the underside of the roof sheathing above.

Exceptions:

1. Where corridor walls provide a sleeping unit or dwelling unit separation, draftstopping shall only be required above one of the corridor walls.

2. Draftstopping is not required in buildings equipped throughout with an automatic sprinkler system in accordance with Section 903.3.1.1.

3. In occupancies in Group R-2 that do not exceed four stories above grade plane, the attic space shall be subdivided by draftstops into areas not exceeding 3,000 square feet (279 m^2) or above every two dwelling units, whichever is smaller.

4. Draftstopping is not required in buildings equipped throughout with an automatic sprinkler system in accordance with Section 903.3.1.2, provided that automatic sprinklers are also installed in the combustible concealed spaces.

717.4.3 Other groups. Draftstopping shall be installed in attics and concealed roof spaces, such that any horizontal area does not exceed 3,000 square feet (279 m^2).

Exception: Draftstopping is not required in buildings equipped throughout with an automatic sprinkler system in accordance with Section 903.3.1.1.

717.5 Combustible materials in concealed spaces in Type I or II construction. Combustible materials shall not be permitted in concealed spaces of buildings of Type I or II construction.

Exceptions:

1. Combustible materials in accordance with Section 603.

2. Combustible materials exposed within plenums complying with Section 602 of the *mechanical code*.

3. Class A interior finish materials classified in accordance with Section 803.

4. Combustible piping within partitions or shaft enclosures installed in accordance with the provisions of this code.

5. Combustible piping within concealed ceiling spaces installed in accordance with the *mechanical code* and the *plumbing code*.

6. Combustible insulation and covering on pipe and tubing, installed in concealed spaces other than plenums, complying with Section 719.7.

SECTION 718
FIRE-RESISTANCE REQUIREMENTS FOR PLASTER

718.1 Thickness of plaster. The minimum thickness of gypsum plaster or portland cement plaster used in a fire-resistance-rated system shall be determined by the prescribed fire tests. The plaster thickness shall be measured from the face of the lath where applied to gypsum lath or metal lath.

718.2 Plaster equivalents. For fire-resistance purposes, ½ inch (12.7 mm) of unsanded gypsum plaster shall be deemed equivalent to ¾ inch (19.1 mm) of one-to-three gypsum sand plaster or 1 inch (25 mm) of portland cement sand plaster.

718.3 Noncombustible furring. In buildings of Type I and II construction, plaster shall be applied directly on concrete or masonry or on approved noncombustible plastering base and furring.

718.4 Double reinforcement. Plaster protection more than 1 inch (25 mm) in thickness shall be reinforced with an additional layer of approved lath embedded at least ¾ inch (19.1 mm) from the outer surface and fixed securely in place.

Exception: Solid plaster partitions or where otherwise determined by fire tests.

718.5 Plaster alternatives for concrete. In reinforced concrete construction, gypsum plaster or portland cement plaster is permitted to be substituted for ½ inch (12.7 mm) of the required poured concrete protection, except that a minimum thickness of $^{3}/_{8}$ inch (9.5 mm) of poured concrete shall be provided in reinforced concrete floors and 1 inch (25 mm) in reinforced concrete columns in addition to the plaster finish. The concrete base shall be prepared in accordance with Section 2510.7.

SECTION 719
THERMAL- AND SOUND-INSULATING MATERIALS

719.1 General. Insulating materials, including facings such as vapor retarders and vapor-permeable membranes, similar coverings and all layers of single and multilayer reflective foil insulations, shall comply with the requirements of this section. Where a flame spread index or a smoke-developed index is specified in this section, such index shall be determined in accordance with ASTM E 84 or UL 723. Any material that is subject to an increase in flame spread index or smoke-developed index beyond the limits herein established through the effects of age, moisture or other atmospheric conditions shall not be permitted.

Exceptions:

1. Fiberboard insulation shall comply with Chapter 23.

2. Foam plastic insulation shall comply with Chapter 26.

3. Duct and pipe insulation and duct and pipe coverings and linings in plenums shall comply with the *mechanical code*.

4. All layers of single and multilayer reflective plastic core insulation shall comply with Section 2613.

719.2 Concealed installation. Insulating materials, where concealed as installed in buildings of any type of construction, shall have a flame spread index of not more than 25 and a smoke-developed index of not more than 450.

Exception: Cellulose loose-fill insulation that is not spray applied, complying with the requirements of Section 719.6, shall only be required to meet the smoke-developed index of not more than 450.

719.2.1 Facings. Where such materials are installed in concealed spaces in buildings of Type III, IV or V construction, the flame spread and smoke-developed limitations do not apply to facings, coverings, and layers of reflective foil insulation that are installed behind and in substantial contact with the unexposed surface of the ceiling, wall or floor finish.

Exception: All layers of single and multilayer reflective plastic core insulation shall comply with Section 2613.

719.3 Exposed installation. Insulating materials, where exposed as installed in buildings of any type of construction, shall have a flame spread index of not more than 25 and a smoke-developed index of not more than 450.

Exception: Cellulose loose-fill insulation that is not spray applied complying with the requirements of Section 719.6 shall only be required to meet the smoke-developed index of not more than 450.

719.3.1 Attic floors. Exposed insulation materials installed on attic floors shall have a critical radiant flux of not less than 0.12 watt per square centimeter when tested in accordance with ASTM E 970.

719.4 Loose-fill insulation. Loose-fill insulation materials that cannot be mounted in the ASTM E 84 or UL 723 apparatus without a screen or artificial supports shall comply with the flame spread and smoke-developed limits of Sections 719.2 and 719.3 when tested in accordance with CAN/ULC S102.2.

Exception: Cellulose loose-fill insulation shall not be required to be tested in accordance with CAN/ULC S102.2, provided such insulation complies with the requirements of Section 719.2 or 719.3, as applicable, and Section 719.6.

719.5 Roof insulation. The use of combustible roof insulation not complying with Sections 719.2 and 719.3 shall be permitted in any type of construction provided it is covered with approved roof coverings directly applied thereto.

719.6 Cellulose loose-fill insulation. Cellulose loose-fill insulation shall comply with CPSC 16 CFR, Part 1209 and CPSC 16 CFR, Part 1404. Each package of such insulating material shall be clearly labeled in accordance with CPSC 16 CFR, Part 1209 and CPSC 16 CFR, Part 1404.

719.7 Insulation and covering on pipe and tubing. Insulation and covering on pipe and tubing shall have a flame spread index of not more than 25 and a smoke-developed index of not more than 450.

***Exceptions*:**

1. Insulation and covering on pipe and tubing installed in plenums shall comply with the *mechanical code.*
2. *Materials installed for protection against heat and sharp edges to comply with the accessibility provisions.*

SECTION 720
PRESCRIPTIVE FIRE RESISTANCE

720.1 General. The provisions of this section contain prescriptive details of fire-resistance-rated building elements, components or assemblies. The materials of construction listed in Tables 720.1(1), 720.1(2), and 720.1(3) shall be assumed to have the fire-resistance ratings prescribed therein. Where materials that change the capacity for heat dissipation are incorporated into a fire-resistance-rated assembly, fire test results or other substantiating data shall be made available to the building official to show that the required fire-resistance-rating time period is not reduced.

720.1.1 Thickness of protective coverings. The thickness of fire-resistant materials required for protection of structural members shall be not less than

set forth in Table 720.1(1), except as modified in this section. The figures shown shall be the net thickness of the protecting materials and shall not include any hollow space in back of the protection.

720.1.2 Unit masonry protection. Where required, metal ties shall be embedded in bed joints of unit masonry for protection of steel columns. Such ties shall be as set forth in Table 720.1(1) or be equivalent thereto.

720.1.3 Reinforcement for cast-in-place concrete column protection. Cast-in-place concrete protection for steel columns shall be reinforced at the edges of such members with wire ties of not less than 0.18 inch (4.6 mm) in diameter wound spirally around the columns on a pitch of not more than 8 inches (203 mm) or by equivalent reinforcement.

720.1.4 Plaster application. The finish coat is not required for plaster protective coatings where they comply with the design mix and thickness requirements of Tables 720.1(1), 720.1(2) and 720.1(3).

720.1.5 Bonded prestressed concrete tendons. For members having a single tendon or more than one tendon installed with equal concrete cover measured from the nearest surface, the cover shall not be less than that set forth in Table 720.1(1). For members having multiple tendons installed with variable concrete cover, the average tendon cover shall not be less than that set forth in Table 720.1(1), provided:

1. The clearance from each tendon to the nearest exposed surface is used to determine the average cover.

2. In no case can the clear cover for individual tendons be less than one-half of that set forth in Table 720.1(1). A minimum cover of ¾ inch (19.1 mm) for slabs and 1 inch (25 mm) for beams is required for any aggregate concrete.

3. For the purpose of establishing a fire-resistance rating, tendons having a clear covering less than that set forth in Table 720.1(1) shall not contribute more than 50 percent of the required ultimate moment capacity for members less than 350 square inches (0.226 m^2) in cross-sectional area and 65 percent for larger members. For structural design purposes, however, tendons having a reduced cover are assumed to be fully effective.

TABLE 720.1(1)
MINIMUM PROTECTION OF STRUCTURAL PARTS BASED ON TIME PERIODS FOR VARIOUS NONCOMBUSTIBLE INSULATING MATERIALS[m]

STRUCTURAL PARTS TO BE PROTECTED	ITEM NUMBER	INSULATING MATERIAL USED	MINIMUM THICKNESS OF INSULATING MATERIAL FOR THE FOLLOWING FIRE-RESISTANCE PERIODS (inches)			
			4 hour	3 hour	2 hour	1 hour
1. Steel columns and all of primary trusses	1-1.1	Carbonate, lightweight and sand-lightweight aggregate concrete, members 6”x 6” or greater (not including sandstone, granite and siliceous gravel).[a]	2½	2	1½	1
	1-1.2	Carbonate, lightweight and sand-lightweight aggregate concrete, members 8”x 8” or greater (not including sandstone, granite and siliceous gravel).[a]	2	1 ½	1	1
	1-1.3	Carbonate, lightweight and sand-lightweight aggregate concrete, members 12”x 12” or greater (not including sandstone, granite and siliceous gravel).[a]	1½	1	1	1
	1-1.4	Siliceous aggregate concrete and concrete excluded in Item 1-1.1, members 6”x 6” or greater.[a]	3	2	1½	1
	1-1.5	Siliceous aggregate concrete and concrete excluded in Item 1-1.1, members 8”x 8” or greater.[a]	2½	2	1	1
	1-1.6	Siliceous aggregate concrete and concrete excluded in Item 1-1.1, members 12”x 12” or greater.[a]	2	1	1	1
	1-2.1	Clay or shale brick with brick and mortar fill.[a]	3¾	—	—	2¼
	1-3.1	4” hollow clay tile in two 2” layers; ½” mortar between tile and column; 3/8” metal mesh 0.046” wire diameter in horizontal joints; tile fill.[a]	4	—	—	—
	1-3.2	2” hollow clay tile; ¾” mortar between tile and column; 3/8” metal mesh 0.046” wire diameter in horizontal joints; limestone concrete fill;[a] plastered with ¾” gypsum plaster.	3	—	—	—
	1-3.3	2” hollow clay tile with outside wire ties 0.08” diameter at each course of tile or 3/8” metal mesh 0.046” diameter wire in horizontal joints; limestone or trap-rock concrete fill[a] extending 1” outside column on all sides.	—	—	3	—
	1-3.4	2” hollow clay tile with outside wire ties 0.08” diameter at each course of tile with or without concrete fill; ¾” mortar between tile and column.	—	—	—	2
	1-4.1	Cement plaster over metal lath wire tied to ¾” cold-rolled vertical channels with 0.049 (No. 18 B.W. gage) wire ties spaced 3” to 6” on center. Plaster mixed 1:2 ½ by volume, cement to sand.	—	—	2½ [b]	7/8
	1-5.1	Vermiculite concrete, 1:4 mix by volume over paperbacked wire fabric lath wrapped directly around column with additional 2”x 2” 0.065”/0.065” (No. 16/16 B.W. gage) wire fabric placed ¾” from outer concrete surface. Wire fabric tied with 0.049” (No. 18 B.W. gage) wire spaced 6” on center for inner layer and 2” on center for outer layer.	2	—	—	—
	1-6.1	Perlite or vermiculite gypsum plaster over metal lath wrapped around column and furred 1¼” from column flanges. Sheets lapped at ends and tied at 6” intervals with 0.049” (No. 18 B.W. gage) tie wire. Plaster pushed through to flanges.	1½	1	—	—
	1-6.2	Perlite or vermiculite gypsum plaster over self-furring metal lath wrapped directly around column, lapped 1” and tied at 6” intervals with 0.049” (No. 18 B.W. gage) wire.	1¾	1 3/8	1	—

	1-6.3	Perlite or vermiculite gypsum plaster on metal lath applied to ¾” cold-rolled channels spaced 24” apart vertically and wrapped flatwise around column.	1½	—	—	—
	1-6.4	Perlite or vermiculite gypsum plaster over two layers of ½” plain full-length gypsum lath applied tight to column flanges. Lath wrapped with 1” hexagonal mesh of No. 20 gage wire and tied with doubled 0.035” diameter (No. 18 B.W. gage) wire ties spaced 23” on center. For three-coat work, the plaster mix for the second coat shall not exceed 100 pounds of gypsum to 2½ cubic feet of aggregate for the 3-hour system.	2½	2	—	—
1. Steel columns and all of primary trusses (continued)	1-6.5	Perlite or vermiculate gypsum plaster over one layer of ½” plain full-length gypsum lath applied tight to column flanges. Lath tied with doubled 0.049” (No. 18 B.W. gage) wire ties spaced 23” on center and scratch coat wrapped with 1” hexagonal mesh 0.035” (No. 20 B.W. gage) wire fabric. For three-coat work, the plaster mix for the second coat shall not exceed 100 pounds of gypsum to 2½ cubic feet of aggregate.	—	2	—	—
	1-7.1	Multiple layers of ½” gypsum wallboard[c] adhesively[d] secured to column flanges and successive layers. Wallboard applied without horizontal joints. Corner edges of each layer staggered. Wallboard layer below outer layer secured to column with doubled 0.049” (No. 18 B.W. gage) steel wire ties spaced 15” on center. Exposed corners taped and treated.	—	—	2	1
	1-7.2	Three layers of $^5/_8$” Type X gypsum wallboard.[c] First and second layer held in place by $^1/_8$” diameter by $1^3/_8$” long ring shank nails with $^5/_{16}$” diameter heads spaced 24” on center at corners. Middle layer also secured with metal straps at mid-height and 18” from each end, and by metal corner bead at each corner held by the metal straps. Third layer attached to corner bead with 1” long gypsum wallboard screws spaced 12” on center.	—	—	$1^7/_8$	—
	1-7.3	Three layers of $^5/_8$” Type X gypsum wallboard,[c] each layer screw attached to $1^5/_8$”steel studs 0.018” thick (No. 25 carbon sheet steel gage) at each corner of column. Middle layer also secured with 0.049” (No. 18 B.W. gage) double-strand steel wire ties, 24” on center. Screws are No. 6 by 1” spaced 24” on center for inner layer, No. 6 by $1^5/_8$” spaced 12” on center for middle layer and No. 8 by 2¼” spaced 12” on center for outer layer.	—	$1^7/_8$	—	—
	1-8.1	Wood-fibered gypsum plaster mixed 1:1 by weight gypsum-to-sand aggregate applied over metal lath. Lath lapped 1” and tied 6” on center at all end, edges and spacers with 0.049” (No. 18 B.W. gage) steel tie wires. Lath applied over ½” spacers made of ¾” furring channel with 2” legs bent around each corner. Spacers located 1” from top and bottom of member and a maximum of 40” on center and wire tied with a single strand of 0.049” (No. 18 B.W. gage) steel tie wires. Corner bead tied to the lath at 6” on center along each corner to provide plaster thickness.	—	—	$1\ ^5/_8$	—
	1-9.1	Minimum W8x35 wide flange steel column (w/d ≥ 0.75) with each web cavity filled even with the flange tip with normal weight carbonate or siliceous aggregate concrete (3,000 psi minimum compressive strength with 145 pcf ± 3 pcf unit weight). Reinforce the concrete in each web cavity with a minimum No. 4 deformed reinforcing bar installed vertically and centered in the cavity, and secured to the column web with a minimum No. 2 horizontal deformed reinforcing bar welded to the web every 18” on center vertically. As an alternative to the No. 4 rebar, ¾” diameter by 3” long headed studs, spaced at 12” on center vertically, shall be welded on each side of the web midway between the column flanges.	—	—	—	See Note n
2. Webs or flanges of steel beams and girders	2-1.1	Carbonate, lightweight and sand-lightweight aggregate concrete (not including sandstone, granite and siliceous gravel) with 3” or finer metal mesh placed 1” from the finished surface anchored to the top flange and providing not less than 0.025 square inch of steel area per foot in each	2	1½	1	1

		direction.				
	2-1.2	Siliceous aggregate concrete and concrete excluded in Item 2-1.1 with 3” or finer metal mesh placed 1” from the finished surface anchored to the top flange and providing not less than 0.025 square inch of steel area per foot in each direction.	2½	2	1½	1
	2-2.1	Cement plaster on metal lath attached to ¾” cold-rolled channels with 0.04” (No. 18 B.W. gage) wire ties spaced 3” to 6” on center. Plaster mixed 1:2½ by volume, cement to sand.	—	—	2½ [b]	7/8
	2-3.1	Vermiculite gypsum plaster on a metal lath cage, wire tied to 0.165” diameter (No. 8 B.W. gage) steel wire hangers wrapped around beam and spaced 16” on center. Metal lath ties spaced approximately 5” on center at cage sides and bottom.	—	7/8	—	—
	2-4.1	Two layers of 5/8” Type X gypsum wallboard[c] are attached to U-shaped brackets spaced 24” on center. 0.018” thick (No. 25 carbon sheet steel gage) 1 5/8” deep by 1” galvanized steel runner channels are first installed parallel to and on each side of the top beam flange to provide a ½” clearance to the flange. The channel runners are attached to steel deck or concrete floor construction with approved fasteners spaced 12” on center. U-shaped brackets are formed from members identical to the channel runners. At the bent portion of the U-shaped bracket, the flanges of the channel are cut out so that 1 5/8” deep corner channels can be inserted without attachment parallel to each side of the lower flange. As an alternate, 0.021” thick (No. 24 carbon sheet steel gage) 1”x 2” runner and corner angles may be used in lieu of channels, and the web cutouts in the U-shaped brackets may be omitted. Each angle is attached to the bracket with ½”-long No. 8 self-drilling screws. The vertical legs of the U-shaped bracket are attached to the runners with one ½” long No. 8 self-drilling screw. The completed steel framing provides a 2 1/8” and 1½” space between the inner layer of wallboard and the sides and bottom of the steel beam, respectively. The inner layer of wallboard is attached to the top runners and bottom corner channels or corner angles with 1¼”-long No. 6 self-drilling screws spaced 16” on center. The outer layer of wallboard is applied with 1¾”-long No. 6 self-drilling screws spaced 8” on center. The bottom corners are reinforced with metal corner beads.	—	—	1¼	—
	2-4.2	Three layers of 5/8” Type X gypsum wallboard[c] attached to a steel suspension system as described immediately above utilizing the 0.018” thick (No. 25 carbon sheet steel gage) 1”x 2” lower corner angles. The framing is located so that a 2 1/8” and 2” space is provided between the inner layer of wallboard and the sides and bottom of the beam, respectively. The first two layers of wallboard are attached as described immediately above. A layer of 0.035” thick (No. 20 B.W. gage) 1” hexagonal galvanized wire mesh is applied under the soffit of the middle layer and up the sides approximately 2”. The mesh is held in position with the No. 6 1 5/8”-long screws installed in the vertical leg of the bottom corner angles. The outer layer of wallboard is attached with No. 6 2¼”-long screws spaced 8” on center. One screw is also installed at the mid-depth of the bracket in each layer. Bottom corners are finished as described above.	—	1 7/8	—	—

3. Bonded pretensioned reinforcement in prestressed concrete[e]	3-1.1	Carbonate, lightweight, sand-lightweight and siliceous[f] aggregate concrete Beams or girders Solid slabs[h]	4[g] 	3[g] 2	2½ 1½	1½ 1
4. Bonded or unbonded post-tensioned tendons in prestressed concrete[e, i]	4-1.1	Carbonate, lightweight, sand-lightweight and siliceous[f] aggregate concrete Unrestrained members: Solid slabsh Beams and girders[j] 8” wide greater than 12” wide	 — 3	 2 4½ 2½	 1½ 2½ 2	 — 1¾ 1½
	4-1.2	Carbonate, lightweight, sand-lightweight and siliceous aggregate Restrained members:[k] Solid slabs[h] Beams and girders[j] 8” wide greater than 12” wide	 1¼ 2½ 2	 1 2 1¾	 ¾ 1¾ 1½	 — — —
5. Reinforcing steel in reinforced concrete columns, beams girders and trusses	5-1.1	Carbonate, lightweight and sand-lightweight aggregate concrete, members 12” or larger, square or round. (Size limit does not apply to beams and girders monolithic with floors.) Siliceous aggregate concrete, members 12” or larger, square or round. (Size limit does not apply to beams and girders monolithic with floors.)	1½ 2	1½ 1½	1½ 1½	1½ 1½
6. Reinforcing steel in reinforced concrete joists[l]	6-1.1 6-1.2	Carbonate, lightweight and sand-lightweight aggregate concrete. Siliceous aggregate concrete.	1¼ 1¾	1¼ 1½	1 1	¾ ¾
7. Reinforcing and tie rods in floor and roof slabs[l]	7-1.1 7-1.2	Carbonate, lightweight and sand-lightweight aggregate concrete. Siliceous aggregate concrete.	1 1¼	1 1	¾ 1	¾ ¾

For SI: 1 inch = 25.4 mm, 1 square inch = 645.2 mm^2, 1 cubic foot = 0.0283 m^3, 1 pound per cubic foot = 16.02 kg/m^3.

a. Reentrant parts of protected members to be filled solidly.

b. Two layers of equal thickness with a ¾ -inch airspace between.

c. For all of the construction with gypsum wallboard described in Table 720.1(1), gypsum base for veneer plaster of the same size, thickness and core type shall be permitted to be substituted for gypsum wallboard, provided attachment is identical to that specified for the wallboard and the joints on the face layer are reinforced, and the entire surface is covered with a minimum of $^1/_{16}$-inch gypsum veneer plaster.

d. An approved adhesive qualified under ASTM E 119 or UL 263.

e. Where lightweight or sand-lightweight concrete having an oven-dry weight of 110 pounds per cubic foot or less is used, the tabulated minimum cover shall be permitted to be reduced 25 percent, except that in no case shall the cover be less than ¾ inch in slabs or 1 ½ inches in beams or girders.

f. For solid slabs of siliceous aggregate concrete, increase tendon cover 20 percent.

g. Adequate provisions against spalling shall be provided by U-shaped or hooped stirrups spaced not to exceed the depth of the member with a clear cover of 1 inch.

h. Prestressed slabs shall have a thickness not less than that required in Table 720.1(3) for the respective fire-resistance time period.

i. Fire coverage and end anchorages shall be as follows: Cover to the prestressing steel at the anchor shall be ½ inch greater than that required away from the anchor. Minimum cover to steel-bearing plate shall be 1 inch in beams and ¾ inch in slabs.

j. For beam widths between 8 inches and 12 inches, cover thickness shall be permitted to be determined by interpolation.

k. Interior spans of continuous slabs, beams and girders shall be permitted to be considered restrained.

l. For use with concrete slabs having a comparable fire endurance where members are framed into the structure in such a manner as to provide equivalent performance to that of monolithic concrete construction.
m. Generic fire-resistance ratings (those not designated as PROPRIETARY* in the listing) in GA 600 shall be accepted as if herein listed.
n. No additional insulating material is required on the exposed outside face of the column flange to achieve a 1-hour fire-resistance rating.

TABLE 720.1(2)
RATED FIRE-RESISTANCE PERIODS FOR VARIOUS WALLS AND PARTITIONS [a, o, p]

MATERIAL	ITEM NUMBER	CONSTRUCTION	MINIMUM FINISHED THICKNESS FACE-TO-FACE[b] (inches)			
			4 hour	3 hour	2 hour	1 hour
1. Brick of clay or shale	1-1.1	Solid brick of clay or shale[c].	6	4.9	3.8	2.7
	1-1.2	Hollow brick, not filled.	5.0	4.3	3.4	2.3
	1-1.3	Hollow brick unit wall, grout or filled with perlite vermiculite or expanded shale aggregate.	6.6	5.5	4.4	3.0
	1-2.1	4” nominal thick units at least 75 percent solid backed with a hat-shaped metal furring channel ¾” thick formed from 0.021” sheet metal attached to the brick wall on 24” centers with approved fasteners, and ½” Type X gypsum wallboard attached to the metal furring strips with 1”-long Type S screws spaced 8” on center.	—	—	5[d]	—
2. Combination of clay brick and load-bearing hollow clay tile	2-1.1	4” solid brick and 4" tile (at least 40 percent solid).	—	8	—	—
	2-1.2	4” solid brick and 8” tile (at least 40 percent solid).	12	—	—	—
3. Concrete masonry units	3-1.1[f, g]	Expanded slag or pumice.	4.7	4.0	3.2	2.1
	3-1.2[f, g]	Expanded clay, shale or slate.	5.1	4.4	3.6	2.6
	3-1.3[f]	Limestone, cinders or air-cooled slag.	5.9	5.0	4.0	2.7
	3-1.4[f, g]	Calcareous or siliceous gravel.	6.2	5.3	4.2	2.8
4. Solid concrete[h, i]	4-1.1	Siliceous aggregate concrete.	7.0	6.2	5.0	3.5
		Carbonate aggregate concrete.	6.6	5.7	4.6	3.2
		Sand-lightweight concrete.	5.4	4.6	3.8	2.7
		Lightweight concrete.	5.1	4.4	3.6	2.5
5. Glazed or unglazed facing tile, nonloadbearing	5-1.1	One 2” unit cored 15 percent maximum and one 4” unit cored 25 percent maximum with ¾” mortar-filled collar joint. Unit positions reversed in alternate courses.	—	$6^3/_8$	—	—
	5-1.2	One 2” unit cored 15 percent maximum and one 4” unit cored 40 percent maximum with ¾” mortar-filled collar joint. Unit positions side with ¾” gypsum plaster. Two wythes tied together every fourth course with No. 22 gage corrugated metal ties.	—	6¾	—	—
	5-1.3	One unit with three cells in wall thickness, cored 29 percent maximum.	—	—	6	—

	5-1.4	One 2” unit cored 22 percent maximum and one 4” unit cored 41 percent maximum with ¼” mortar-filled collar joint. Two wythes tied together every third course with 0.030” (No. 22 galvanized sheet steel gage) corrugated metal ties.	—	—	6	—
	5-1.5	One 4” unit cored 25 percent maximum with ¾” gypsum plaster on one side.	—	—	4¾	—
	5-1.6	One 4” unit with two cells in wall thickness, cored 22 percent maximum.	—	—	—	4
	5-1.7	One 4” unit cored 30 percent maximum with ¾” vermiculite gypsum plaster on one side.	—	—	4½	—
	5-1.8	One 4” unit cored 39 percent maximum with ¾” gypsum plaster on one side.	—	—	—	4½
6. Solid gypsum plaster	6-1.1	¾” by 0.055” (No. 16 carbon sheet steel gage) vertical cold-rolled channels, 16” on center with 2.6-pound flat metal lath applied to one face and tied with 0.049” (No. 18 B.W. Gage) wire at 6”spacing. Gypsum plaster each side mixed 1:2 by weight, gypsum to sand aggregate.	—	—	—	2[d]
	6-1.2	¾” by 0.05” (No. 16 carbon sheet steel gage) cold-rolled channels 16” on center with metal lath applied to one face and tied with 0.049” (No. 18 B.W. gage) wire at 6” spacing. Perlite or vermiculite gypsum plaster each side. For three-coat work, the plaster mix for the second coat shall not exceed 100 pounds of gypsum to 2½ cubic feet of aggregate for the 1-hour system.	—	—	2½ [d]	2[d]
	6-1.3	¾” by 0.055” (No. 16 carbon sheet steel gage) vertical cold-rolled channels, 16” on center with 3/8” gypsum lath applied to one face and attached with sheet metal clips. Gypsum plaster each side mixed 1:2 by weight, gypsum to sand aggregate.	—	—	—	2[d]
	6-2.1	Studless with ½” full-length plain gypsum lath and gypsum plaster each side. Plaster mixed 1:1 for scratch coat and 1:2 for brown coat, by weight, gypsum to sand aggregate.	—	—	—	2[d]
	6-2.2	Studless with ½” full-length plain gypsum lath and perlite or vermiculite gypsum plaster each side.	—	—	2½ [d]	2[d]
	6-2.3	Studless partition with 3/8” rib metal lath installed vertically adjacent edges tied 6” on center with No. 18 gage wire ties, gypsum plaster each side mixed 1:2 by weight, gypsum to sand aggregate.	—	—	—	2[d]
7. Solid perlite and portland cement	7-1.1	Perlite mixed in the ratio of 3 cubic feet to 100 pounds of portland cement and machine applied to stud side of 1½” mesh by 0.058-inch (No. 17 B.W. gage) paper-backed woven wire fabric lath wire-tied to 4”-deep steel trussed wire[j] studs 16” on center. Wire ties of 0.049” (No. 18 B.W. gage) galvanized steel wire 6” on center vertically.	—	—	3 1/8[d]	—
8. Solid neat wood fibered gypsum plaster	8-1.1	¾” by 0.055-inch (No. 16 carbon sheet steel gage) cold-rolled channels, 12” on center with 2.5-pound flat metal lath applied to one face and tied with 0.049” (No. 18 B.W. gage) wire at 6” spacing. Neat gypsum plaster applied each side.	—	—	2[d]	—
9. Solid wallboard partition	9-1.1	One full-length layer ½” Type X gypsum wallboard[e] laminated to each side of 1” full-length V-edge gypsum coreboard with approved laminating compound. Vertical joints of face layer and coreboard staggered at least 3”.	—	—	2[d]	—

10. Hollow (studless) gypsum wallboard partition	10-1.1	One full-length layer of $^{5}/_{8}$" Type X gypsum wallboard[e] attached to both sides of wood or metal top and bottom runners laminated to each side of 1"x 6" full-length gypsum coreboard ribs spaced 2" on center with approved laminating compound. Ribs centered at vertical joints of face plies and joints staggered 24" in opposing faces. Ribs may be recessed 6" from the top and bottom.	—	—	—	2¼ [d]
	10-1.2	1" regular gypsum V-edge full-length backing board attached to both sides of wood or metal top and bottom runners with nails or $1^{5}/_{8}$"drywall screws at 24" on center. Minimum width of rumors $1^{5}/_{8}$". Face layer of ½"regular full-length gypsum wallboard laminated to outer faces of backing board with approved laminating compound.	—	—	$4^{5}/_{8}$ [d]	—
11. Noncombustible studs—interior partition with plaster each side	11-1.1	3¼"x 0.044" (No. 18 carbon sheet steel gage) steel studs spaced 24" on center. $^{5}/_{8}$" gypsum plaster on metal lath each side mixed 1:2 by weight, gypsum to sand aggregate.	—	—	—	4¾ [d]
	11-1.2	3 3/8"x 0.055" (No. 16 carbon sheet steel gage) approved nailablek studs spaced 24" on center. $^{5}/_{8}$" neat gypsum wood-fibered plaster each side over $^{3}/_{8}$" rib metal lath nailed to studs with 6d common nails, 8" on center. Nails driven 1¼" and bent over.	—	—	$5^{5}/_{8}$	—
	11-1.3	4"x 0.044" (No. 18 carbon sheet steel gage) channel-shaped steel studs at 16" on center. On each side approved resilient clips pressed onto stud flange at 16" vertical spacing, ¼" pencil rods snapped into or wire tied onto outer loop of clips, metal lath wire-tied to pencil rods at 6" intervals, 1" perlite gypsum plaster, each side.	—	$7^{5}/_{8}$[d]	—	—
	11-1.4	2½"x 0.044" (No. 18 carbon sheet steel gage) steel studs spaced 16" on center. Wood fibered gypsum plaster mixed 1:1 by weight gypsum to sand aggregate applied on ¾ -pound metal lath wire tied to studs, each side. ¾" plaster applied over each face, including finish coat.	—	—	4¼ [d]	—
12. Wood studs interior partition with plaster each side	12-1.1[l, m]	2"x 4" wood studs 16" on center with $^{5}/_{8}$" gypsum plaster on metal lath. Lath attached by 4d common nails bent over or No. 14 gage by 1¼" by ¾" crown width staples spaced 6" on center. Plaster mixed 1:1½ for scratch coat and 1:3 for brown coat, by weight, gypsum to sand aggregate.	—	—	—	$5^{1}/_{8}$
	12-1.2[l]	2"x 4"wood studs 16"on center with metal lath and $^{7}/_{8}$" neat wood-fibered gypsum plaster each side. Lath attached by 6d common nails, 7" on center. Nails driven 1¼" and bent over.	—	—	5½ [d]	—
	12-1.3 l	2"x 4" wood studs 16" on center with $^{3}/_{8}$" perforated or plain gypsum lath and ½" gypsum plaster each side. Lath nailed with $1^{1}/_{8}$" by No. 13 gage by $^{19}/_{64}$" head plasterboard blued nails, 4" on center. Plaster mixed 1:2 by weight, gypsum to sand aggregate.	—	—	—	5¼
	12-1.4 l	2"x 4" wood studs 16" on center with $^{3}/_{8}$" Type X gypsum lath and ½" gypsum plaster each side. Lath nailed with 1 1/8" by No. 13 gage by 19/64" head plasterboard blued nails, 5" on center. Plaster mixed 1:2 by weight, gypsum to sand aggregate.	—	—	—	5 ¼
13.Noncombustible studs—interior partition with gypsum wallboard each side	13-1.1	0.018" (No. 25 carbon sheet steel gage) channel-shaped studs 24" on center with one full-length layer of $^{5}/_{8}$" Type X gypsum wallboard[e] applied vertically attached with 1" long No. 6 drywall screws to each stud. Screws are 8" on center around the perimeter and 12" on center on the intermediate stud. The wallboard may be applied horizontally when attached to $3^{5}/_{8}$" studs and the horizontal joints are staggered with those on the opposite side. Screws for the horizontal application shall be 8" on center at vertical edges and 12" on center at intermediate studs.	—	—	—	$2^{7}/_{8}$[d]

	13-1.2	0.018” (No. 25 carbon sheet steel gage) channel-shaped studs 25” on center with two full-length layers of ½” Type X gypsum wallboard[e] applied vertically each side. First layer attached with 1”-long, No. 6 drywall screws, 8” on center around the perimeter and 12” on center on the intermediate stud. Second layer applied with vertical joints offset one stud space from first layer using $1^5/_8$” long, No. 6 drywall screws spaced 9”on center along vertical joints, 12”on center at intermediate studs and 24” on center along top and bottom runners.	—	—	$3^5/_8$ [d]	—
	13-1.3	0.055” (No. 16 carbon sheet steel gage) approved nailable metal studs[e] 24” on center with full-length $^5/_8$” Type X gypsum wallboard[e] applied vertically and nailed 7” on center with 6d cement-coated common nails. Approved metal fastener grips used with nails at vertical butt joints along studs.	—	—	—	$4^7/_8$
14.Wood studs—interior partition with gypsum wallboard each side	14-1.1[h, m]	2”x 4” wood studs 16” on center with two layers of $^3/_8$” regular gypsum wallboard[e] each side, 4d cooler[n] or wallboard[n] nails at 8” on center first layer, 5d cooler[n] or wallboard[n] nails at 8” on center second layer with laminating compound between layers, joints staggered. First layer applied full length vertically, second layer applied horizontally or vertically.	—	—	—	5
	14-1.2[l, m]	2”x 4” wood studs 16” on center with two layers ½” regular gypsum wallboard[e] applied vertically or horizontally each side[k], joints staggered. Nail base layer with 5d cooler[n] or wallboard[n] nails at 8” on center face layer with 8d cooler[n] or wallboard[n] nails at 8” on center.	—	—	—	5½
	14-1.3[l, m]	2”x 4” wood studs 24” on center with $^5/_8$” Type X gypsum wallboard[e] applied vertically or horizontally nailed with 6d cooler[n] or wallboard[n] nails at 7” on center with end joints on nailing members. Stagger joints each side.	—	—	—	4¾
	14-1.4[l]	2”x 4” fire-retardant-treated wood studs spaced 24” on center with one layer of $^5/_8$” Type X gypsum wallboard[e] applied with face paper grain (long dimension) parallel to studs. Wallboard attached with 6d cooler[n] or wallboard[n] nails at 7” on center.	—	—	—	4¾ [d]
	14-1.5[l, m]	2”x 4” wood studs 16” on center with two layers $^5/_8$” Type X gypsum wallboard[e] each side. Base layers applied vertically and nailed with 6d cooler[n] or wallboard[n] nails at 9” on center. Face layer applied vertically or horizontally and nailed with 8d cooler[n] or wallboard[n] nails at 7” on center. For nail-adhesive application, base layers are nailed 6” on center. Face layers applied with coating of approved wallboard adhesive and nailed 12” on center.	—	—	6	—
	14-1.6[l]	2”x 3” fire-retardant-treated wood studs spaced 24” on center with one layer of $^5/_8$” Type X gypsum wallboard[e] applied with face paper grain (long dimension) at right angles to studs. Wallboard attached with 6d cement-coated box nails spaced 7” on center.	—	—	—	$3^5/_8$[d]
15. Exterior or interior walls	15-1.1[l, m]	Exterior surface with ¾” drop siding over ½” gypsum sheathing on 2”x 4” wood studs at 16” on center, interior surface treatment as required for 1-hour-rated exterior or interior 2”x 4” wood stud partitions. Gypsum sheathing nailed with 1¾” by No. 11 gage by $^7/_{16}$” head galvanized nails at 8” on center. Siding nailed with 7d galvanized smooth box nails.	—	—	—	Varies
	15-1.2[l, m]	2”x 4” wood studs 16” on center with metal lath and ¾” cement plaster on each side. Lath attached with 6d common nails 7” on center driven to 1” minimum penetration and bent over. Plaster mix 1:4 for scratch coat and 1:5 for brown coat, by volume, cement to sand.	—	—	—	$5^3/_8$

15-1.3 [l, m]	2”x 4” wood studs 16” on center with $^{7}/_{8}$” cement plaster (measured from the face of studs) on the exterior surface with interior surface treatment as required for interior wood stud partitions in this table. Plaster mix 1:4 for scratch coat and 1:5 for brown coat, by volume, cement to sand.	—	—	—	Varies
15-1.4	$3^{5}/_{8}$” No. 16 gage noncombustible studs 16” on center with $^{7}/_{8}$” cement plaster (measured from the face of the studs) on the exterior surface with interior surface treatment as required for interior, nonbearing, noncombustible stud partitions in this table. Plaster mix 1:4 for scratch coat and 1:5 for brown coat, by volume, cement to sand.	—	—	—	Varies[d]
15-1.5[m]	2¼”x 3¾” clay face brick with cored holes over ½” gypsum sheathing on exterior surface of 2”x 4” wood studs at 16” on center and two layers $^{5}/_{8}$” Type X gypsum wallboard[e] on interior surface. Sheathing placed horizontally or vertically with vertical joints over studs nailed 6” on center with 1¾”x No. 11 gage by $^{7}/_{16}$” head galvanized nails. Inner layer of wallboard placed horizontally or vertically and nailed 8” on center with 6d cooler[n] or wallboard[n] nails. Outer layer of wallboard placed horizontally or vertically and nailed 8” on center with 8d cooler[n] or wallboard[n] nails. All joints staggered with vertical joints over studs. Outer layer joints taped and finished with compound. Nail heads covered with joint compound. 0.035 inch (No. 20 galvanized sheet gage) corrugated galvanized steel wall ties ¾” by $6^{5}/_{8}$” attached to each stud with two 8d cooler[n] or wallboard[n] nails every sixth course of bricks.	—	—	10	—
15-1.6 [l, m]	2”x 6” fire-retardant-treated wood studs 16” on center. Interior face has two layers of $^{5}/_{8}$” Type X gypsum with the base layer placed vertically and attached with 6d box nails 12” on center. The face layer is placed horizontally and attached with 8d box nails 8” on center at joints and 12” on center elsewhere. The exterior face has a base layer of $^{5}/_{8}$” Type X gypsum sheathing placed vertically with 6d box nails 8” on center at joints and 12” on center elsewhere. An approved building paper is next applied, followed by self-furred exterior lath attached with 2½”, No. 12 gage galvanized roofing nails with a $^{3}/_{8}$” diameter head and spaced 6” on center along each stud. Cement plaster consisting of a ½” brown coat is then applied. The scratch coat is mixed in the proportion of 1:3 by weight, cement to sand with 10 pounds of hydrated lime and 3 pounds of approved additives or admixtures per sack of cement. The brown coat is mixed in the proportion of 1:4 by weight, cement to sand with the same amounts of hydrated lime and approved additives or admixtures used in the scratch coat.	—	—	8¼	—

15. Exterior or interior walls (continued)	15-1.7 [l, m]	2”x 6” wood studs 16” on center. The exterior face has a layer of $^{5}/_{8}$” Type X gypsum sheathing placed vertically with 6d box nails 8” on center at joints and 12” on center elsewhere. An approved building paper is next applied, followed by 1” by No. 18 gage self-furred exterior lath attached with 8d by 2½” long galvanized roofing nails spaced 6” on center along each stud. Cement plaster consisting of a ½” scratch coat, a bonding agent and a ½” brown coat and a finish coat is then applied. The scratch coat is mixed in the proportion of 1:3 by weight, cement to sand with 10 pounds of hydrated lime and 3 pounds of approved additives or admixtures per sack of cement. The brown coat is mixed in the proportion of 1:4 by weight, cement to sand with the same amounts of hydrated lime and approved additives or admixtures used in the scratch coat. The interior is covered with $^{3}/_{8}$” gypsum lath with 1” hexagonal mesh of 0.035 inch (No. 20 B.W. gage) woven wire lath furred out $^{5}/_{16}$” and 1” perlite or vermiculite gypsum plaster. Lath nailed with $1^{1}/_{8}$” by No. 13 gage by $^{19}/_{64}$” head plasterboard glued nails spaced 5” on center. Mesh attached by 1¾” by No. 12 gage by $^{3}/_{8}$” head nails with $^{3}/_{8}$” furrings, spaced 8” on center. The plaster mix shall not exceed 100 pounds of gypsum to 2½ cubic feet of aggregate.	—	—	$8^{3}/_{8}$	—
	15-1.8 [l, m]	2”x 6” wood studs 16” on center. The exterior face has a layer of $^{5}/_{8}$” Type X gypsum sheathing placed vertically with 6d box nails 8” on center at joints and 12” on center elsewhere. An approved building paper is next applied, followed by 1½” by No. 17 gage self-furred exterior lath attached with 8d by 2½” long galvanized roofing nails spaced 6” on center along each stud. Cement plaster consisting of a ½” scratch coat, and a ½” brown coat is then applied. The plaster may be placed by machine. The scratch coat is mixed in the proportion of 1:4 by weight, plastic cement to sand. The brown coat is mixed in the proportion of 1:5 by weight, plastic cement to sand. The interior is covered with $^{3}/_{8}$” gypsum lath with 1” hexagonal mesh of No. 20 gage woven wire lath furred out $^{5}/_{16}$” and 1” perlite or vermiculite gypsum plaster. Lath nailed with $1^{1}/_{8}$” by No. 13 gage by $^{19}/_{64}$” head plasterboard glued nails spaced 5” on center. Mesh attached by 1¾” by No. 12 gage by $^{3}/_{8}$” head nails with $^{3}/_{8}$” furrings, spaced 8” on center. The plaster mix shall not exceed 100 pounds of gypsum to 2½ cubic feet of aggregate.	—	—	$8^{3}/_{8}$	—
	15-1.9	4” No. 18 gage, nonload-bearing metal studs, 16” on center, with 1” portland cement lime plaster [measured from the back side of the ¾ -pound expanded metal lath] on the exterior surface. Interior surface to be covered with 1” of gypsum plaster on ¾ -pound expanded metal lath proportioned by weight—1:2 for scratch coat, 1:3 for brown, gypsum to sand. Lath on one side of the partition fastened to ¼” diameter pencil rods supported by No. 20 gage metal clips, located 16” on center vertically, on each stud. 3” thick mineral fiber insulating batts friction fitted between the studs.	—	—	6½ [d]	—

	15-1.10	Steel studs 0.060” thick, 4” deep or 6” at 16” or 24” centers, with ½” Glass Fiber Reinforced Concrete (GFRC) on the exterior surface. GFRC is attached with flex anchors at 24” on center, with 5” leg welded to studs with two ½” -long flare-bevel welds, and 4” foot attached to the GFRC skin with 5/8” thick GFRC bonding pads that extend 2½” beyond the flex anchor foot on both sides. Interior surface to have two layers of ½” Type X gypsum wallboard.[e] The first layer of wallboard to be attached with 1”-long Type S buglehead screws spaced 24” on center and the second layer is attached with 1 5/8”-long Type S screws spaced at 12” on center. Cavity is to be filled with 5” of 4 pcf (nominal) mineral fiber batts. GFRC has 1½” returns packed with mineral fiber and caulked on the exterior.	—	—	6½	—
15. Exterior or interior walls (continued)	15-1.11	Steel studs 0.060” thick, 4” deep or 6” at 16” or 24” centers, respectively, with ½” Glass Fiber Reinforced Concrete (GFRC) on the exterior surface. GFRC is attached with flex anchors at 24” on center, with 5” leg welded to studs with two ½”-long flare-bevel welds, and 4” foot attached to the GFRC skin with 5/8”-thick GFRC bonding pads that extend 2 ½” beyond the flex anchor foot on both sides. Interior surface to have one layer of 5/8” Type X gypsum wallboard[e], attached with 1¼”-long Type S buglehead screws spaced 12” on center. Cavity is to be filled with 5” of 4 pcf (nominal) mineral fiber batts. GFRC has 1½” returns packed with mineral fiber and caulked on the exterior.	—	—	—	6 1/8
	15-1.12[q]	2”x 6” wood studs at 16” with double top plates, single bottom plate; interior and exterior sides covered with 5/8” Type X gypsum wallboard, 4” wide, applied horizontally or vertically with vertical joints over studs, and fastened with 2¼” Type S drywall screws, spaced 12” on center. Cavity to be filled with 5½” mineral wool insulation.	—	—	—	6¾
	15-1.13[q]	2”x 6” wood studs at 16” with double top plates, single bottom plate; interior and exterior sides covered with 5/8” Type X gypsum wallboard, 4” wide, applied vertically with all joints over framing or blocking and fastened with 2¼” Type S drywall screws, spaced 12” on center. R-19 mineral fiber insulation installed in stud cavity.	—	—	—	6¾
	15-1.14[q]	2”x 6” wood studs at 16” with double top plates, single bottom plate; interior and exterior sides covered with 5/8” Type X gypsum wallboard, 4” wide, applied horizontally or vertically with vertical joints over studs, and fastened with 2¼” Type S drywall screws, spaced 7” on center.	—	—	—	6¾
	15-1.15[q]	2”x 4” wood studs at 16” with double top plates, single bottom plate; interior and exterior sides covered with 5/8” Type X gypsum wallboard and sheathing, respectively, 4” wide, applied horizontally or vertically with vertical joints over studs, and fastened with 2¼” Type S drywall screws, spaced 12” on center. Cavity to be filled with 3½” mineral wool insulation.	—	—	—	4¾
	15-1.16[q]	2”x 6” wood studs at 24” centers with double top plates, single bottom plate; interior and exterior side covered with two layers of 5/8” Type X gypsum wallboard, 4” wide, applied horizontally with vertical joints over studs. Base layer fastened with 2¼” Type S drywall screws, spaced 24” on center and face layer fastened with Type S drywall screws, spaced 8” on center, wallboard joints covered with paper tape and joint compound, fastener heads covered with joint compound. Cavity to be filled with 5½” mineral wool insulation.	—	—	7¾	—

	15-2.1[d]	$3^5/_8$" No. 16 gage steel studs at 24" on center or 2"x 4" wood studs at 24" on center. Metal lath attached to the exterior side of studs with minimum 1" long No. 6 drywall screws at 6" on center and covered with minimum ¾" thick portland cement plaster. Thin veneer brick units of clay or shale complying with ASTM C 1088, Grade TBS or better, installed in running bond in accordance with Section 1405.10. Combined total thickness of the portland cement plaster, mortar and thin veneer brick units shall be not less than 1¾". Interior side covered with one layer of $^5/_8$" thick Type X gypsum wallboard attached to studs with 1" long No. 6 drywall screws at 12" on center.				6
	15-2.2[d]	$3^5/_8$" No. 16 gage steel studs at 24" on center or 2"x 4" wood studs at 24" on center. Metal lath attached to the exterior side of studs with minimum 1" long No. 6 drywall screws at 6" on center and covered with minimum ¾" thick portland cement plaster. Thin veneer brick units of clay or shale complying with ASTM C 1088, Grade TBS or better, installed in running bond in accordance with Section 1405.10. Combined total thickness of the portland cement plaster, mortar and thin veneer brick units shall be not less than 2". Interior side covered with two layers of $^5/_8$"thick Type X gypsum wallboard. Bottom layer attached to studs with 1" long No. 6 drywall screws at 24" on center. Top layer attached to studs with $1^5/_8$"long No. 6 drywall screws at 12" on center.			$6^7/_8$	
	15-2.3[d]	$3^5/_8$" No. 16 gage steel studs at 16" on center or 2"x 4" wood studs at 16" on center. Where metal lath is used, attach to the exterior side of studs with minimum 1" long No. 6 drywall screws at 6" on center. Brick units of clay or shale not less than $2^5/_8$" thick complying with ASTM C 216 installed in accordance with Section 1405.6 with a minimum 1" air space. Interior side covered with one layer of $^5/_8$" thick Type X gypsum wallboard attached to studs with 1" long No. 6 drywall screws at 12" on center.				$7^7/_8$
	15-2.4[d]	$3^5/_8$" No. 16 gage steel studs at 16" on center or 2"x 4" wood studs at 16" on center. Where metal lath is used, attach to the exterior side of studs with minimum 1" long No. 6 drywall screws at 6" on center. Brick units of clay or shale not less than $2^5/_8$" thick complying with ASTM C 216 installed in accordance with Section 1405.6 with a minimum 1" air space. Interior side covered with two layers of $^5/_8$" thick Type X gypsum wallboard. Bottom layer attached to studs with 1" long No. 6 drywall screws at 24" on center. Top layer attached to studs with $1^5/_8$" long No. 6 drywall screws at 12" on center.			8½	
16. Exterior walls rated for fire resistance from the inside only in accordance with Section 705.5.	16-1.1[q]	2"x 4" wood studs at 16" centers with double top plates, single bottom plate; interior side covered with $^5/_8$" Type X gypsum wallboard, 4" wide, applied horizontally unblocked, and fastened with 2¼" Type S drywall screws, spaced 12" on center, wallboard joints covered with paper tape and joint compound, fastener heads covered with joint compound. Exterior covered with $^3/_8$" wood structural panels, applied vertically, horizontal joints blocked and fastened with 6d common nails (bright) — 12" on center in the field, and 6" on center panel edges. Cavity to be filled with 3½" mineral wool insulation. Rating established for exposure from interior side only.	—	—	—	4½

	16-1.2[q]	2”x 6” (51mm x 152 mm) wood studs at 16“ centers with double top plates, single bottom plate; interior side covered with $^{5}/_{8}$” Type X gypsum wallboard, 4” wide, applied horizontally or vertically with vertical joints over studs and fastened with 2¼” Type S drywall screws, spaced 12” on center, wallboard joints covered with paper tape and joint compound, fastener heads covered with joint compound, exterior side covered with $^{7}/_{16}$” wood structural panels fastened with 6d common nails (bright) spaced 12” on center in the field and 6” on center along the panel edges. Cavity to be filled with 5½” mineral wool insulation. Rating established from the gypsum-covered side only.	—	—	—	6 $^{9}/_{16}$
	16-1.3	2”x 6” wood studs at 16” centers with double top plates, single bottom plates; interior side covered with $^{5}/_{8}$” Type X gypsum wallboard, 4” wide, applied vertically with all joints over framing or blocking and fastened with 2¼” Type S drywall screws spaced 7” on center. Joints to be covered with tape and joint compound. Exterior covered with $^{3}/_{8}$” wood structural panels, applied vertically with edges over framing or blocking and fastened with 6d common nails (bright) at 12” on center in the field and 6” on center on panel edges. R-19 mineral fiber insulation installed in stud cavity. Rating established from the gypsum-covered side only.	—	—	—	6½

For SI: 1 inch = 25.4 mm, 1 square inch = 645.2 mm^2, 1 cubic foot = 0.0283 m^3.

a. Staples with equivalent holding power and penetration shall be permitted to be used as alternate fasteners to nails for attachment to wood framing.

b. Thickness shown for brick and clay tile is nominal thicknesses unless plastered, in which case thicknesses are net. Thickness shown for concrete masonry and clay masonry is equivalent thickness defined in Section 721.3.1 for concrete masonry and Section 721.4.1.1 for clay masonry. Where all cells are solid grouted or filled with silicone-treated perlite loose-fill insulation; vermiculite loose-fill insulation; or expanded clay, shale or slate lightweight aggregate, the equivalent thickness shall be the thickness of the block or brick using specified dimensions as defined in Chapter 21. Equivalent thickness may also include the thickness of applied plaster and lath or gypsum wallboard, where specified.

c. For units in which the net cross-sectional area of cored brick in any plane parallel to the surface containing the cores is at least 75 percent of the gross cross-sectional area measured in the same plane.

d. Shall be used for nonbearing purposes only.

e. For all of the construction with gypsum wallboard described in this table, gypsum base for veneer plaster of the same size, thickness and core type shall be permitted to be substituted for gypsum wallboard, provided attachment is identical to that specified for the wallboard, and the joints on the face layer are reinforced and the entire surface is covered with a minimum of $^{1}/_{16}$-inch gypsum veneer plaster.

f. The fire-resistance time period for concrete masonry units meeting the equivalent thicknesses required for a 2-hour fire-resistance rating in Item 3, and having a thickness of not less than 7$^{5}/_{8}$ inches is 4 hours when cores which are not grouted are filled with silicone-treated perlite loose-fill insulation; vermiculite loose-fill insulation; or expanded clay, shale or slate lightweight aggregate, sand or slag having a maximum particle size of $^{3}/_{8}$ inch.

g. The fire-resistance rating of concrete masonry units composed of a combination of aggregate types or where plaster is applied directly to the concrete masonry shall be determined in accordance with ACI 216.1/TMS 0216. Lightweight aggregates shall have a maximum combined density of 65 pounds per cubic foot.

h. See also Note b. The equivalent thickness shall be permitted to include the thickness of cement plaster or 1.5 times the thickness of gypsum plaster applied in accordance with the requirements of Chapter 25.

i. Concrete walls shall be reinforced with horizontal and vertical temperature reinforcement as required by Chapter 19.

j. Studs are welded truss wire studs with 0.18 inch (No. 7 B.W. gage) flange wire and 0.18 inch (No. 7 B.W. gage) truss wires.

k. Nailable metal studs consist of two channel studs spot welded back to back with a crimped web forming a nailing groove.

l. Wood structural panels shall be permitted to be installed between the fire protection and the wood studs on either the interior or exterior side of the wood frame assemblies in this table, provided the length of the fasteners used to attach the

fire protection is increased by an amount at least equal to the thickness of the wood structural panel.

m. The design stress of studs shall be reduced to 78 percent of allowable *F'c* with the maximum not greater than 78 percent of the calculated stress with studs having a slenderness ratio l_e/d of 33.

n. For properties of cooler or wallboard nails, see ASTM C 514, ASTM C 547 or ASTM F 1667.

o. Generic fire-resistance ratings (those not designated as PROPRIETARY* in the listing) in the GA 600 shall be accepted as if herein listed.

p. NCMA TEK 5-8A shall be permitted for the design of fire walls.

q. The design stress of studs shall be equal to a maximum of 100 percent of the allowable *F'c* calculated in accordance with Section 2306.

TABLE 720.1(3)
MINIMUM PROTECTION FOR FLOOR AND ROOF SYSTEMS[a, q]

FLOOR OR ROOF CONSTRUCTION	ITEM NUMBER	CEILING CONSTRUCTION	THICKNESS OF FLOOR OR ROOF SLAB (inches)				MINIMUM THICKNESS OF CEILING (inches)			
			4 hour	3 hour	2 hour	1 hour	4 hour	3 hour	2 hour	1 hour
1. Siliceous aggregate concrete	1-1.1	Slab (no ceiling required). Minimum cover over nonprestressed reinforcement shall not be less than ¾" [b].	7.0	6.2	5.0	3.5	—	—	—	—
2. Carbonate aggregate concrete	2-1.1		6.6	5.7	4.6	3.2	—	—	—	—
3. Sand-lightweight concrete	3-1.1		5.4	4.6	3.8	2.7	—	—	—	—
4. Lightweight concrete	4-1.1		5.1	4.4	3.6	2.5	—	—	—	—
5. Reinforced concrete	5-1.1	Slab with suspended ceiling of vermiculite gypsum plaster over metal lath attached to ¾" cold-rolled channels spaced 12" on center. Ceiling located 6" minimum below joists.	3	2	—	—	1	¾	—	—
	5-2.1	3/8" Type X gypsum wallboard[c] attached to 0.018 inch (No. 25 carbon sheet steel gage) by 7/8" deep by 2 5/8" hat-shaped galvanized steel channels with 1"-long No. 6 screws. The channels are spaced 24" on center, span 35" and are supported along their length at 35" intervals by 0.033" (No. 21 galvanized sheet gage) galvanized steel flat strap hangers having formed edges that engage the lips of the channel. The strap hangers are attached to the side of the concrete joists with 5/32" by 1¼" long power-driven fasteners. The wallboard is installed with the long dimension perpendicular to the channels. All end joints occur on channels and supplementary channels are installed parallel to the main channels, 12" each side, at end joint occurrences. The finished ceiling is located approximately 12" below the soffit of the floor slab.	—	—	2½	—	—	—	5/8	—

6. Steel joists constructed with a poured reinforced concrete slab on metal lath forms or steel form units[d, e]	6-1.1	Gypsum plaster on metal lath attached to the bottom cord with single No. 16 gage or doubled No. 18 gage wire ties spaced 6” on center. Plaster mixed 1:2 for scratch coat, 1:3 for brown coat, by weight, gypsum-to-sand aggregate for 2-hour system. For 3-hour system plaster is neat.	—	—	2½	2¼	—	—	¾	5/8
	6-2.1	Vermiculite gypsum plaster on metal lath attached to the bottom chord with single No.16 gage or doubled 0.049-inch (No. 18 B.W. gage) wire ties 6” on center.	—	2	—	—	—	5/8	—	—
	6-3.1	Cement plaster over metal lath attached to the bottom chord of joists with single No. 16 gage or doubled 0.049” (No. 18 B.W. gage) wire ties spaced 6” on center. Plaster mixed 1:2 for scratch coat, 1:3 for brown coat for 1-hour system and 1:1 for scratch coat, 1:1½ for brown coat for 2-hour system, by weight, cement to sand.	—	—	—	2	—	—	—	5/8[f]
	6-4.1	Ceiling of 5/8” Type X wallboard[c] attached to 7/8” deep by 2 5/8” by 0.021 inch (No. 25 carbon sheet steel gage) hat-shaped furring channels 12” on center with 1” long No. 6 wallboard screws at 8” on center. Channels wire tied to bottom chord of joists with doubled 0.049 inch (No. 18 B.W. gage) wire or suspended below joists on wire hangers.[g]	—	—	2½	—	—	—	5/8	—
	6-5.1	Wood-fibered gypsum plaster mixed 1:1 by weight gypsum to sand aggregate applied over metal lath. Lath tied 6” on center to ¾” channels spaced 13½” on center. Channels secured to joists at each intersection with two strands of 0.049 inch (No. 18 B.W. gage) galvanized wire.	—	—	2½	—	—	—	¾	—
7. Reinforced concrete slabs and joists with hollow clay tile fillers laid end to end in rows 2½” or more apart; reinforcement placed between rows and concrete cast around and over tile.	7-1.1	5/8” gypsum plaster on bottom of floor or roof construction.	—	—	8[h]	—	—	—	5/8	—
	7-1.2	None	—	—	—	5½[i]	—	—	—	—

8. Steel joists constructed with a reinforced concrete slab on top poured on a ½" deep steel deck.[e]	8-1.1	Vermiculite gypsum plaster on metal lath attached to ¾" cold-rolled channels with 0.049" (No. 18 B.W. gage) wire ties spaced 6" on center.	2½[j]	—	—	—	¾	—	—	—
9. 3" deep cellular steel deck with concrete slab on top. Slab thickness measured to top.	9-1.1	Suspended ceiling of vermiculite gypsum plaster base coat and vermiculite acoustical plaster on metal lath attached at 6" intervals to ¾" cold-rolled channels spaced 12" on center and secured to 1½" cold-rolled channels spaced 36" on center with 0.065" (No. 16 B.W. gage) wire. 1½" channels supported by No. 8 gage wire hangers at 36" on center. Beams within envelope and with a 2½" airspace between beam soffit and lath have a 4-hour rating.	2½	—	—	—	1 1/8[k]	—	—	—
10. 1½"-deep steel roof deck on steel framing. Insulation board, 30 pcf density, composed of wood fibers with cement binders of thickness shown bonded to deck with unified asphalt adhesive. Covered with a Class A or B roof covering.	10-1.1	Ceiling of gypsum plaster on metal lath. Lath attached to ¾" furring channels with 0.049" (No. 18 B.W. gage) wire ties spaced 6" on center. ¾" channel saddle tied to 2" channels with doubled 0.065" (No. 16 B.W. gage) wire ties. 2" channels spaced 36" on center suspended 2" below steel framing and saddle-tied with 0.165" (No. 8 B.W. gage) wire. Plaster mixed 1:2 by weight, gypsum-to-sand aggregate.	—	—	1 7/8	1	—	—	¾[l]	¾[l]
11. 1½"-deep steel roof deck on steel-framing wood fiber insulation board, 17.5 pcf density on top applied over a 15-lb asphalt-saturated felt. Class A or B roof covering.	11-1.1	Ceiling of gypsum plaster on metal lath. Lath attached to ¾" furring channels with 0.049" (No. 18 B.W. gage) wire ties spaced 6" on center. ¾" channels saddle tied to 2" channels with doubled 0.065" (No. 16 B.W. gage) wire ties. 2" channels spaced 36" on center suspended 2" below steel framing and saddle tied with 0.165" (No. 8 B.W. gage) wire. Plaster mixed 1:2 for scratch coat and 1:3 for brown coat, by weight, gypsum-to-sand aggregate for 1-hour system. For 2-hour system, plaster mix is 1:2 by weight, gypsum-to-sand aggregate.	—	—	1½	1	—	—	7/8[g]	¾[l]
12. 1½"deep steel roof deck on steel-framing insulation of rigid board consisting of expanded perlite and fibers impregnated with integral asphalt waterproofing; density 9 to 12 pcf secured to metal roof deck by ½" wide ribbons of waterproof, cold-process liquid adhesive spaced 6" apart. Steel joist or light steel construction with	12-1.1	Gypsum-vermiculite plaster on metal lath wire tied at 6" intervals to ¾" furring channels spaced 12" on center and wire tied to 2" runner channels spaced 32" on center. Runners wire tied to bottom chord of steel joists.	—	—	1	—	—	—	7/8	—

metal roof deck, insulation, and Class A or B built-up roof covering.[e]										
13. Double wood floor over wood joists spaced 16” on center.[m,n]	13-1.1	Gypsum plaster over $^{3}/_{8}$” Type X gypsum lath. Lath initially applied with not less than four $1^{1}/_{8}$” by No. 13 gage by $^{19}/_{64}$” head plasterboard blued nails per bearing. Continuous stripping over lath along all joist lines. Stripping consists of 3” wide strips of metal lath attached by 1½”by No. 11 gage by ½” head roofing nails spaced 6” on center. Alternate stripping consists of 3” wide 0.049” diameter wire stripping weighing 1 pound per square yard and attached by No.16 gage by 1½” by ¾” crown width staples, spaced 4” on center. Where alternate stripping is used, the lath nailing may consist of two nails at each end and one nail at each intermediate bearing. Plaster mixed 1:2 by weight, gypsum-to-sand aggregate.	—	—	—	—	—	—	—	$^{7}/_{8}$
	13-1.2	Cement or gypsum plaster on metal lath. Lath fastened with 1½” by No. 11 gage by $^{7}/_{16}$” head barbed shank roofing nails spaced 5” on center. Plaster mixed 1:2 for scratch coat and 1:3 for brown coat, by weight, cement to sand aggregate.	—	—	—	—	—	—	—	$^{5}/_{8}$
	13-1.3	Perlite or vermiculite gypsum plaster on metal lath secured to joists with 1½” by No. 11 gage by $^{7}/_{16}$” head barbed shank roofing nails spaced 5” on center.	—	—	—	—	—	—	—	$^{5}/_{8}$
	13-1.4	½” Type X gypsum wallboard[c] nailed to joists with 5d cooler[o] or wallboard[o] nails at 6” on center. End joints of wallboard centered on joists.	—	—	—	—	—	—	—	½

14. Plywood stressed skin panels consisting of $^{5}/_{8}$" -thick interior C-D (exterior glue) top stressed skin on 2"x 6" nominal (minimum) stringers. Adjacent panel edges joined with 8d common wire nails spaced 6"on center. Stringers spaced 12"maximum on center.	14-1.1	½"-thick wood fiberboard weighing 15 to 18 pounds per cubic foot installed with long dimension parallel to stringers or $^{3}/_{8}$" C-D (exterior glue) plywood glued and/or nailed to stringers. Nailing to be with 5d cooler[o] or wallboard[o] nails at 12" on center. Second layer of ½" Type X gypsum wallboard[c] applied with long dimension perpendicular to joists and attached with 8d cooler[o] or wallboard[o] nails at 6" on center at end joints and 8" on center elsewhere. Wallboard joints staggered with respect to fiberboard joints.	—	—	—	—	—	—	—	1
15. Vermiculite concrete slab proportioned 1:4 (portland cement to vermiculite aggregate) on a 1½"-deep steel deck supported on individually protected steel framing. Maximum span of deck 6'-10" where deck is less than 0.019 inch (No. 26 carbon steel sheet gage) or greater. Slab reinforced with 4"x 8" 0.109/0.083" (No. 12/14 B.W. gage) welded wire mesh.	15-1.1	None	—	—	—	3[j]	—	—	—	—
16. Perlite concrete slab proportioned 1:6 (portland cement to perlite aggregate) on a 1¼"-deep steel deck supported on individually protected steel framing. Slab reinforced with 4"x 8" 0.109/0.083" (No. 12/14 B.W. gage) welded wire mesh.	16-1.1	None	—	—	—	3½[j]	—	—	—	—
17. Perlite concrete slab proportioned 1:6 (portland cement to perlite aggregate) on a $^{9}/_{16}$"-deep steel deck supported by steel joists 4" on center. Class A or B roof covering on top.	17-1.1	Perlite gypsum plaster on metal lath wire tied to ¾" furring channels attached with 0.065" (No. 16 B.W. gage) wire ties to lower chord of joists.	—	2[p]	2[p]	—	—	$^{7}/_{8}$	¾	—

18. Perlite concrete slab proportioned 1:6 (portland cement to perlite aggregate) on 1¼”-deep steel deck supported on individually protected steel framing. Maximum span of deck 6’-10” where deck is less than 0.019” (No. 26 carbon sheet steel gage) and 8’-0”where deck is 0.019” (No. 26 carbon sheet steel gage) or greater. Slab reinforced with 0.042” (No. 19 B.W. gage) hexagonal wire mesh. Class A or B roof covering on top.	18-1.1	None	—	2¼[p]	2¼[p]	—	—	—	—	—
19. Floor and beam construction consisting of 3”-deep cellular steel floor unit mounted on steel members with 1:4 (proportion of portland cement to perlite aggregate) perlite-concrete floor slab on top.	19-1.1	Suspended envelope ceiling of perlite gypsum plaster on metal lath attached to ¾” cold-rolled channels, secured to 1½” cold-rolled channels spaced 42” on center supported by 0.203 inch (No. 6 B.W. gage) wire 36” on center. Beams in envelope with 3” minimum airspace between beam soffit and lath have a 4-hour rating.	2[p]	—	—	—	1[1]	—	—	—
20. Perlite concrete proportioned 1:6 (portland cement to perlite aggregate) poured to 1/8” thickness above top of corrugations of 5/16”-deep galvanized steel deck maximum span 8’-0” for 0.024” (No. 24 galvanized sheet gage) or 6’-0” for 0.019” (No. 26 galvanized sheet gage) with deck supported by individually protected steel framing. Approved polystyrene foam plastic insulation board having a flame spread not exceeding 75 (1” to 4” thickness) with vent holes that approximate 3 percent of the board surface area placed on top of perlite slurry. A 2” by 4” insulation board contains six 2¾” diameter holes. Board covered with 2¼” minimum perlite concrete	20-1.1	None	—	—	Varies	—	—	—	—	—

slab.										
20. Slab reinforced with mesh consisting of 0.042" (No. 19 B.W. gage) galvanized steel wire twisted together to form 2" hexagons with straight 0.065" (No. 16 B.W. gage) galvanized steel wire woven into mesh and spaced 3". Alternate slab reinforcement shall be permitted to consist of 4"x 8", 0.109/0.238" (No. 12/4 B.W. gage), or 2"x 2", 0.083/0.083" (No. 14/14 B.W. gage) welded wire fabric. Class A or B roof covering on top.	20-1.1	None	—	—	Varies	—	—	—	—	—
21. Wood joists, wood I-joists, floor trusses and flat or pitched roof trusses spaced a maximum 24" o.c. with ½" wood structural panels with exterior glue applied at right angles to top of joist or top chord of trusses with 8d nails. The wood structural panel thickness shall not be less than nominal ½" nor less than required by Chapter 23.	21-1.1	Base layer $^5/_8$" Type X gypsum wallboard applied at right angles to joist or truss 24" o.c. with 1¼" Type S or Type W drywall screws 24" o.c. Face layer $^5/_8$" Type X gypsum wallboard or veneer base applied at right angles to joist or truss through base layer with 1$^5/_8$"Type S or Type W drywall screws 12" o.c. at joints and intermediate joist or truss. Face layer Type G drywall screws placed 2" back on either side of face layer end joints, 12" o.c.	—	—	—	Varies	—	—	—	1¼
22. Steel joists, floor trusses and flat or pitched roof trusses spaced a maximum 24" o.c. with ½" wood structural panels with exterior glue applied at right angles to top of joist or top chord of trusses with No. 8 screws. The wood structural panel thickness shall not be less than nominal ½" nor less than required by Chapter 23.	22-1.1	Base layer $^5/_8$" Type X gypsum board applied at right angles to steel framing 24" on center with 1" Type S drywall screws spaced 24" on center. Face layer $^5/_8$" Type X gypsum board applied at right angles to steel framing attached through base layer with 1$^5/_8$" Type S drywall screws 12" on center at end joints and intermediate joints and 1½"Type G drywall screws 12 inches on center placed 2" back on either side of face layer end joints. Joints of the face layer are offset 24" from the joints of the base layer.	—	—	—	Varies	—	—	—	1¼

23. Wood I-joist (minimum joist depth 9¼" with a minimum flange depth of $^{15}/_{16}$" and a minimum flange cross-sectional area of 2.3 square inches) at 24" o.c. spacing with 1 inch by 4 inch (nominal) wood furring strip spacer applied parallel to and covering the bottom of the bottom flange of each member, tacked in place. 2" mineral wool insulation, 3.5 pcf (nominal) installed adjacent to the bottom flange of the I-joist and supported by the 1"x 4" furring strip spacer.	23-1.1	½" deep single leg resilient channel 16" on center (channels doubled at wallboard end joints), placed perpendicular to the furring strip and joist and attached to each joist by $1^{7}/_{8}$" Type S drywall screws. $^{5}/_{8}$" Type C gypsum wallboard applied perpendicular to the channel with end joints staggered at least 4" and fastened with $1^{1}/_{8}$" Type S drywall screws spaced 7" on center. Wallboard joints to be taped and covered with joint compound.	—	—	—	Varies	—	—	—	$^{5}/_{8}$
24. Wood I-joist (minimum I-joist depth 9¼" with a minimum flange depth of 1½" and a minimum flange cross-sectional area of 5.25 square inches; minimum web thickness of $^{3}/_{8}$") @ 24" o.c., 1½" mineral wool insulation (2.5 pcf—nominal) resting on hat-shaped furring channels.	24-1.1	Minimum 0.026" thick hat-shaped channel 16" o.c. (channels doubled at wallboard end joints), placed perpendicular to the joist and attached to each joist by $1^{5}/_{8}$" Type S drywall screws. $^{5}/_{8}$" Type C gypsum wallboard applied perpendicular to the channel with end joints staggered and fastened with $1^{1}/_{8}$" Type S drywall screws spaced 12" o.c. in the field and 8" o.c. at the wallboard ends. Wallboard joints to be taped and covered with joint compound.	—	—	—	Varies	—	—	—	$^{5}/_{8}$
25. Wood I-joist (minimum I-joist depth 9¼" with a minimum flange depth of 1½" and a minimum flange cross-sectional area of 5.25 square inches; minimum web thickness of $^{7}/_{16}$") @ 24" o.c., 1½" mineral wool insulation (2.5 pcf—nominal) resting on resilient channels.	25-1.1	Minimum 0.019" thick resilient channel 16" o.c. (channels doubled at wallboard end joints), placed perpendicular to the joist and attached to each joist by $1^{5}/_{8}$" Type S drywall screws. $^{5}/_{8}$" Type C gypsum wallboard applied perpendicular to the channel with end joints staggered and fastened with 1" Type S drywall screws spaced 12" o.c. in the field and 8" o.c. at the wallboard ends. Wallboard joints to be taped and covered with joint compound.	—	—	—	Varies	—	—	—	$^{5}/_{8}$

26. Wood I-joist (minimum I-joist depth 9¼” with a minimum flange thickness of 1½” and a minimum flange cross-sectional area of 2.25 square inches; minimum web thickness of $^{3}/_{8}$”) @ 24” o.c.	26-1.1	Two layers of ½” Type X gypsum wallboard applied with the long dimension perpendicular to the I-joists with end joints staggered. The base layer is fastened with $1^{5}/_{8}$” Type S drywall screws spaced 12” o.c. and the face layer is fastened with 2” Type S drywall screws spaced 12” o.c. in the field and 8” o.c. on the edges. Face layer end joints shall not occur on the same I-joist as base layer end joints and edge joints shall be offset 24” from base layer joints. Face layer to also be attached to base layer with 1½” Type G drywall screws spaced 8” o.c. placed 6” from face layer end joints. Face layer wallboard joints to be taped and covered with joint compound.	—	—	—	Varies	—	—	—	1
27. Wood I-joist (minimum I-joist depth 9½” with a minimum flange depth of $1^{5}/_{16}$” and a minimum flange cross-sectional area of 1.95 square inches; minimum web thickness of $^{3}/_{8}$”) @ 24” o.c.	27-1.1	Minimum 0.019” thick resilient channel 16” o.c. (channels doubled at wallboard end joints), placed perpendicular to the joist and attached to each joist by $1^{5}/_{8}$” Type S drywall screws. Two layers of ½” Type X gypsum wallboard applied with the long dimension perpendicular to the I-joists with end joints staggered. The base layer is fastened with 1¼” Type S drywall screws spaced 12” o.c. and the face layer is fastened with $1^{5}/_{8}$” Type S drywall screws spaced 12” o.c. Face layer end joints shall not occur on the same I-joist as base layer end joints and edge joints shall be offset 24” from base layer joints. Face layer to also be attached to base layer with 1½” Type G drywall screws spaced 8” o.c. placed 6” from face layer end joints. Face layer wallboard joints to be taped and covered with joint compound.	—	—	—	Varies	—	—	—	1

28. Wood I-joist (minimum I-joist depth 9¼" with a minimum flange depth of 1½" and a minimum flange cross-sectional area of 2.25 square inches; minimum web thickness of $^{3}/_{8}$") @ 24" o.c. Unfaced fiberglass insulation is installed between the I-joists supported on the upper surface of the flange by stay wires spaced 12" o.c.	28-1.1	Base layer of $^{5}/_{8}$" Type C gypsum wallboard attached directly to I-joists with $1^{5}/_{8}$" Type S drywall screws spaced 12" o.c. with ends staggered. Minimum 0.0179" thick hat-shaped $^{7}/_{8}$-inch furring channel 16" o.c. (channels doubled at wallboard end joints), placed perpendicular to the joist and attached to each joist by $1^{5}/_{8}$" Type S drywall screws after the base layer of gypsum wallboard has been applied. The middle and face layers of $^{5}/_{8}$" Type C gypsum wallboard applied perpendicular to the channel with end joints staggered. The middle layer is fastened with 1" Type S drywall screws spaced 12" o.c. The face layer is applied parallel to the middle layer but with the edge joints offset 24" from those of the middle layer and fastened with $1^{5}/_{8}$" Type S drywall screws 8" o.c. The joints shall be taped and covered with joint compound.	—	—	—	Varies	—	—	2¾	—
29. Channel-shaped 18 gage steel joists (minimum depth 8") spaced a maximum 24" o.c. supporting tongue-and-groove wood structural panels (nominal minimum ¾" thick) applied perpendicular to framing members. Structural panels attached with 1-$^{5}/_{8}$" Type S-12 screws spaced 12" o.c.	29-1.1	Base layer $^{5}/_{8}$" Type X gypsum board applied perpendicular to bottom of framing members with $1^{1}/_{8}$" Type S-12 screws spaced 12" o.c. Second layer $^{5}/_{8}$" Type X gypsum board attached perpendicular to framing members with $1^{5}/_{8}$" Type S-12 screws spaced 12" o.c. Second layer joints offset 24" from base layer. Third layer $^{5}/_{8}$" Type X gypsum board attached perpendicular to framing members with $2^{3}/_{8}$" Type S-12 screws spaced 12" o.c. Third layer joints offset 12" from second layer joints. Hat-shaped 7/8-inch rigid furring channels applied at right angles to framing members over third layer with two $2^{3}/_{8}$" Type S-12 screws at each framing member. Face layer $^{5}/_{8}$" Type X gypsum board applied at right angles to furring channels with $1^{1}/_{8}$" Type S screws spaced 12" o.c.	—	—	Varies	—	—	—	$3^{3}/_{8}$	—

For SI: 1 inch = 25.4 mm, 1 foot = 304.8 mm, 1 pound = .454 kg, 1 cubic foot = 0.0283m^3, 1 pound per square inch = 6.895 kPa, 1 pound per lineal foot = 1.4882 kg/m.

a. Staples with equivalent holding power and penetration shall be permitted to be used as alternate fasteners to nails for attachment to wood framing.

b. When the slab is in an unrestrained condition, minimum reinforcement cover shall not be less than $1^{5}/_{8}$ inches for 4-hour (siliceous aggregate only); $1^{1}/_{4}$ inches for 4- and 3-hour; 1 inch for 2-hour (siliceous aggregate only); and $^{3}/_{4}$ inch for all other restrained and unrestrained conditions.

c. For all of the construction with gypsum wallboard described in this table, gypsum base for veneer plaster of the same size, thickness and core type shall be permitted to be substituted for gypsum wallboard, provided attachment is identical to that specified for the wallboard, and the joints on the face layer are reinforced and the entire surface is covered with a minimum of $^{1}/_{16}$-inch gypsum veneer plaster.

d. Slab thickness over steel joists measured at the joists for metal lath form and at the top of the form for steel form units.

e. (a) The maximum allowable stress level for H-Series joists shall not exceed 22,000 psi.
(b) The allowable stress for K-Series joists shall not exceed 26,000 psi, the nominal depth of such joist shall not be less than 10 inches and the nominal joist weight shall not be less than 5 pounds per lineal foot.
f. Cement plaster with 15 pounds of hydrated lime and 3 pounds of approved additives or admixtures per bag of cement.
g. Gypsum wallboard ceilings attached to steel framing shall be permitted to be suspended with $1^1/_2$-inch cold-formed carrying channels spaced 48 inches on center, which are suspended with No. 8 SWG galvanized wire hangers spaced 48 inches on center. Cross-furring channels are tied to the carrying channels with No.18 SWG galvanized wire hangers spaced 48 inches on center. Cross-furring channels are tied to the carrying channels with No. 18 SWG galvanized wire (double strand) and spaced as required for direct attachment to the framing. This alternative is also applicable to those steel framing assemblies recognized under Note q.
h. Six-inch hollow clay tile with 2-inch concrete slab above.
i. Four-inch hollow clay tile with $1^1/_2$-inch concrete slab above.
j. Thickness measured to bottom of steel form units.
k. Five-eighths inch of vermiculite gypsum plaster plus $^1/_2$ inch of approved vermiculite acoustical plastic.
l. Furring channels spaced 12 inches on center.
m. Double wood floor shall be permitted to be either of the following:
(a) Subfloor of 1-inch nominal boarding, a layer of asbestos paper weighing not less than 14 pounds per 100 square feet and a layer of 1-inch nominal tongue-and-groove finished flooring; or
(b) Subfloor of 1-inch nominal tongue-and-groove boarding or $^{15}/_{32}$-inch wood structural panels with exterior glue and a layer of 1-inch nominal tongue-and-groove finished flooring or $^{19}/_{32}$-inch wood structural panel finish flooring or a layer of Type I Grade M-1 particleboard not less than $^5/_8$-inch thick.
n. The ceiling shall be permitted to be omitted over unusable space, and flooring shall be permitted to be omitted where unusable space occurs above.
o. For properties of cooler or wallboard nails, see ASTM C 514, ASTM C 547 or ASTM F 1667.
p. Thickness measured on top of steel deck unit.
q. Generic fire-resistance ratings (those not designated as PROPRIETARY* in the listing) in the GA 600 shall be accepted as if herein listed.

CALCULATED FIRE RESISTANCE

721.1 General. The provisions of this section contain procedures by which the fire resistance of specific materials or combinations of materials is established by calculations. These procedures apply only to the information contained in this section and shall not be otherwise used. The calculated fire resistance of concrete, concrete masonry and clay masonry assemblies shall be permitted in accordance with ACI 216.1/TMS 0216. The calculated fire resistance of steel assemblies shall be permitted in accordance with Chapter 5 of ASCE 29. The calculated fire resistance of exposed wood members and wood decking shall be permitted in accordance with Chapter 16 of ANSI/AF&PA National Design Specification for Wood Construction (NDS).

721.1.1 Definitions. The following words and terms shall, for the purposes of this chapter and as used elsewhere in this code, have the meanings shown herein.

CERAMIC FIBER BLANKET. A mineral wool insulation material made of alumina-silica fibers and weighing 4 to 10 pounds per cubic foot (pcf) (64 to 160 kg/m^3).

CONCRETE, CARBONATE AGGREGATE. Concrete made with aggregates consisting mainly of calcium or magnesium carbonate, such as limestone or dolomite, and containing 40 percent or less quartz, chert or flint.

CONCRETE, CELLULAR. A lightweight insulating concrete made by mixing a preformed foam with portland cement slurry and having a dry unit weight of approximately 30 pcf (480 kg/m^3).

CONCRETE, LIGHTWEIGHT AGGREGATE. Concrete made with aggregates of expanded clay, shale, slag or slate or sintered fly ash or any natural lightweight aggregate meeting ASTM C 330 and possessing equivalent fire-resistance properties and weighing 85 to 115 pcf (1360 to 1840 kg/m^3).

CONCRETE, PERLITE. A lightweight insulating concrete having a dry unit weight of approximately 30 pcf (480 kg/m^3) made with perlite concrete aggregate. Perlite aggregate is produced from a volcanic rock which, when heated, expands to form a glass-like material of cellular structure.

CONCRETE, SAND-LIGHTWEIGHT. Concrete made with a combination of expanded clay, shale, slag, slate, sintered fly ash, or any natural lightweight aggregate meeting ASTM C 330 and possessing equivalent fire-resistance properties and natural sand. Its unit weight is generally between 105 and 120 pcf (1680 and 1920 kg/m^3).

CONCRETE, SILICEOUS AGGREGATE. Concrete made with normal-weight aggregates consisting mainly of silica or compounds other than calcium or magnesium carbonate, which contains more than 40-percent quartz, chert or flint.

CONCRETE, VERMICULITE. A lightweight insulating concrete made with vermiculite concrete aggregate which is laminated micaceous material produced by expanding the ore at high temperatures. When added to a portland cement slurry the resulting concrete has a dry unit weight of approximately 30 pcf (480 kg/m^3).

MINERAL BOARD. A rigid felted thermal insulation board consisting of either felted mineral fiber or cellular beads of expanded aggregate formed into flat rectangular units.

GLASS FIBERBOARD. Fibrous glass roof insulation consisting of inorganic glass fibers formed into rigid boards using a binder. The board has a top surface faced with asphalt and kraft reinforced with glass fiber.

721.2 Concrete assemblies. The provisions of this section contain procedures by which the fire-resistance ratings of concrete assemblies are established by calculations.

721.2.1 Concrete walls. Cast-in-place and precast concrete walls shall comply with Section 721.2.1.1. Multiwythe concrete walls shall comply with Section 721.2.1.2. Joints between precast panels shall comply with Section 721.2.1.3. Concrete walls with gypsum wallboard or plaster finish shall comply with Section 721.2.1.4.

721.2.1.1 Cast-in-place or precast walls. The minimum equivalent thicknesses of cast-in-place or precast concrete walls for fire-resistance ratings of 1 hour to 4 hours are shown in Table 721.2.1.1. For solid walls with flat vertical surfaces, the equivalent thickness is the same as the actual thickness. The values in Table 721.2.1.1 apply to plain, reinforced or prestressed concrete walls.

TABLE 721.2.1.1
MINIMUM EQUIVALENT THICKNESS OF CAST-IN-PLACE OR PRECAST CONCRETE WALLS, LOAD-BEARING OR NONLOAD-BEARING

CONCRETE TYPE	MINIMUM SLAB THICKNESS (inches) FOR FIRE-RESISTANCE RATING OF				
	1-hour	1½ -hour	2-hour	3-hour	4-hour
Siliceous	3.5	4.3	5.0	6.2	7.0
Carbonate	3.2	4.0	4.6	5.7	6.6
Sand-Lightweight	2.7	3.3	3.8	4.6	5.4
Lightweight	2.5	3.1	3.6	4.4	5.1

For SI: 1 inch = 25.4 mm.

721.2.1.1.1 Hollow-core precast wall panels. For hollow-core precast concrete wall panels in which the cores are of constant cross section throughout the length, calculation of the equivalent thickness by

dividing the net cross-sectional area (the gross cross section minus the area of the cores) of the panel by its width shall be permitted.

721.2.1.1.2 Core spaces filled. Where all of the core spaces of hollow-core wall panels are filled with loose-fill material, such as expanded shale, clay, or slag, or vermiculite or perlite, the fire-resistance rating of the wall is the same as that of a solid wall of the same concrete type and of the same overall thickness.

721.2.1.1.3 Tapered cross sections. The thickness of panels with tapered cross sections shall be that determined at a distance $2t$ or 6 inches (152 mm), whichever is less, from the point of minimum thickness, where t is the minimum thickness.

721.2.1.1.4 Ribbed or undulating surfaces. The equivalent thickness of panels with ribbed or undulating surfaces shall be determined by one of the following expressions:

For $s \geq 4t$, the thickness to be used shall be t

For $s \leq 2t$, the thickness to be used shall be t_e

For $4t > s > 2t$, the thickness to be used shall be

$$t + \left(\frac{4t}{s} - 1\right)(t_e - t) \qquad \textbf{(Equation 7-3)}$$

where:

s = Spacing of ribs or undulations.

t = Minimum thickness.

t_e = Equivalent thickness of the panel calculated as the net cross-sectional area of the panel divided by the width, in which the maximum thickness used in the calculation shall not exceed $2t$.

721.2.1.2 Multiwythe walls. For walls that consist of two wythes of different types of concrete, shall be permitted to be determined from Figure 721.2.1.2.

721.2.1.2.1 Two or more wythes. The fire-resistance rating for wall panels consisting of two or more wythes shall be permitted to be determined by the formula:

$$R = (R_1^{0.59} + R_2^{0.59} + \ldots + R_n^{0.59})^{1.7} \qquad \textbf{(Equation 7-4)}$$

where:

R = The fire endurance of the assembly, minutes.

R_1, R_2, and R_n = The fire endurances of the individual wythes, minutes. Values of $R_n^{0.59}$ for use in Equation 7-4 are given in Table 21.2.1.2(1). Calculated fire-resistance ratings are shown in Table 21.2.1.2(2).

For SI: 1 inch = 25.4 mm.

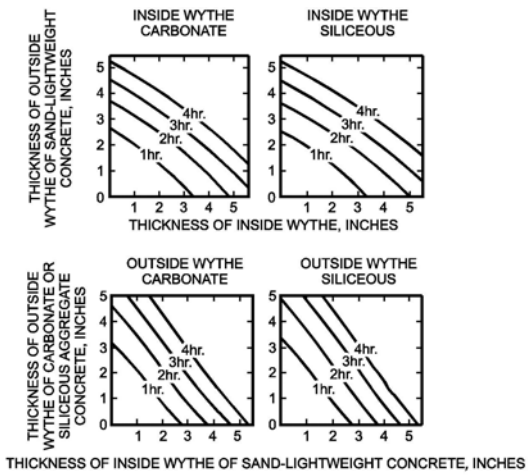

FIGURE 721.2.1.2
FIRE-RESISTANCE RATINGS OF TWO-WYTHE CONCRETE WALLS

TABLE 721.2.1.2(1)
VALUES OF $R_n^{0.59}$ FOR USE IN EQUATION 7-4

TYPE OF MATERIAL	THICKNESS OF MATERIAL (inches)											
	1½	2	2½	3	3½	4	4½	5	5½	6	6½	7
Siliceous aggregate concrete	5.3	6.5	8.1	9.5	11.3	13.0	14.9	16.9	18.8	20.7	22.8	25.1
Carbonate aggregate concrete	5.5	7.1	8.9	10.4	12.0	14.0	16.2	18.1	20.3	21.9	24.7	27.2[c]
Sand-lightweight concrete	6.5	8.2	10.5	12.8	15.5	18.1	20.7	23.3	26.0[c]	Note c	Note c	Note c
Lightweight concrete	6.6	8.8	11.2	13.7	16.5	19.1	21.9	24.7	27.8[c]	Note c	Note c	Note c
Insulating concrete[a]	9.3	13.3	16.6	18.3	23.1	26.5[c]	Note c	Note c	Note c	Note c	Note c	Note c
Airspace[b]	-	-	-	-	-	-	-	-	-	-	-	-

For SI: 1 inch = 25.4 mm, 1 pound per cubic foot = 16.02 kg/m^3.
a. Dry unit weight of 35 pcf or less and consisting of cellular, perlite or vermiculite concrete.

b. The Rn 0.59 value for one ½" to 3½" airspace is 3.3. The $R_n^{0.59}$ value for two ½" to 3½" airspaces is 6.7.
c. The fire-resistance rating for this thickness exceeds 4 hours.

TABLE 721.2.1.2(2)
FIRE-RESISTANCE RATINGS BASED ON $R^{O.59}$

R [a], MINUTES	$R^{0.59}$
60	11.20
120	16.85
180	21.41
240	25.37

a. Based on Equation 7-4.

721.2.1.2.2 Foam plastic insulation. The fire-resistance ratings of precast concrete wall panels consisting of a layer of foam plastic insulation sandwiched between two wythes of concrete shall be permitted to be determined by use of Equation 7-4. Foam plastic insulation with a total thickness of less than 1 inch (25 mm) shall be disregarded. The R_n value for thickness of foam plastic insulation of 1 inch (25 mm) or greater, for use in the calculation, is 5 minutes; therefore $R_n^{0.59} = 2.5$.

721.2.1.3 Joints between precast wall panels. Joints between precast concrete wall panels which are not insulated as required by this section shall be considered as openings in walls. Uninsulated joints shall be included in determining the percentage of openings permitted by Table 705.8. Where openings are not permitted or are required by this code to be protected, the provisions of this section shall be used to determine the amount of joint insulation required. Insulated joints shall not be considered openings for purposes of determining compliance with the allowable percentage of openings in Table 705.8

721.2.1.3.1 Ceramic fiber joint protection. Figure 721.2.1.3.1 shows thicknesses of ceramic fiber blankets to be used to insulate joints between precast concrete wall panels for various panel thicknesses and for joint widths of $^3/_8$ inch (9.5 mm) and 1 inch (25 mm) for fire-resistance ratings of 1 hour to 4 hours. For joint widths between $^3/_8$ inch (9.5 mm) and 1 inch (25 mm), the thickness of ceramic fiber blanket is allowed to be determined by direct interpolation. Other tested and labeled materials are acceptable in place of ceramic fiber blankets.

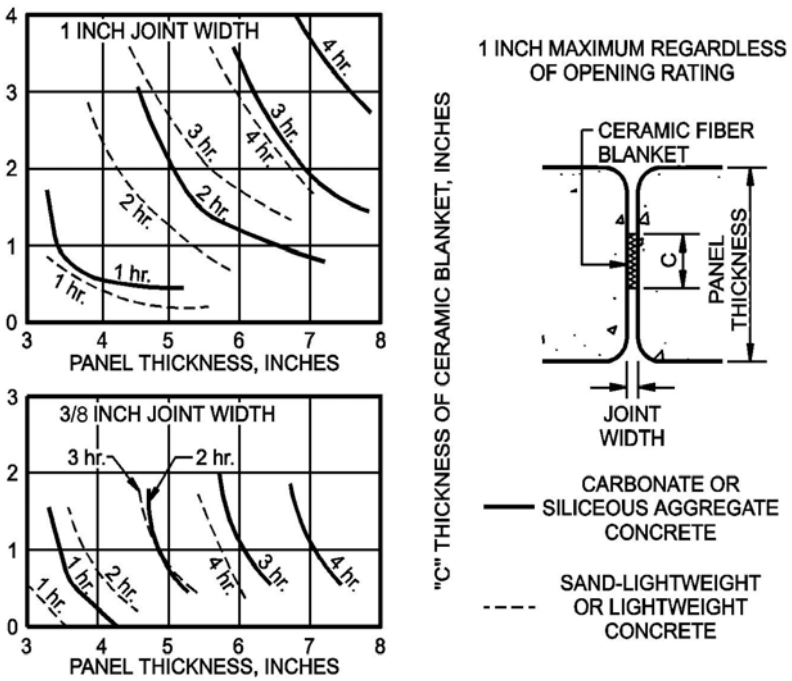

For SI: 1 inch = 25.4 mm.

FIGURE 721.2.1.3.1
CERAMIC FIBER JOINT PROTECTION

721.2.1.4 Walls with gypsum wallboard or plaster finishes. The fire-resistance rating of cast-in-place or precast concrete walls with finishes of gypsum wallboard or plaster applied to one or both sides shall be permitted to be calculated in accordance with the provisions of this section.

721.2.1.4.1 Nonfire-exposed side. Where the finish of gypsum wallboard or plaster is applied to the side of the wall not exposed to fire, the contribution of the finish to the total fire-resistance rating shall be determined as follows: The thickness of the finish shall first be corrected by multiplying the actual thickness of the finish by the applicable factor determined from Table 721.2.1.4(1) based on the type of aggregate in the concrete. The corrected thickness of finish shall then be added to the actual or equivalent thickness of concrete

and fire-resistance rating of the concrete and finish determined from Table 721.2.1.1, Figure 721.2.1.2 or Table 721.2.1.2(1).

721.2.1.4.2 Fire-exposed side. Where gypsum wallboard or plaster is applied to the fire-exposed side of the wall, the contribution of the finish to the total fire-resistance rating shall be determined as follows: The time assigned to the finish as established by Table 721.2.1.4(2) shall be added to the fire-resistance rating determined from Table 721.2.1.1 or Figure 721.2.1.2, or Table 721.2.1.2(1) for the concrete alone, or to the rating determined in Section 721.2.1.4.1 for the concrete and finish on the nonfire-exposed side.

TABLE 721.2.1.4(1)
MULTIPLYING FACTOR FOR FINISHES ON NONFIRE-EXPOSED SIDE OF WALL

TYPE OF FINISH APPLIED TO CONCRETE OR CONCRETE MASONRY WALL	TYPE OF AGGREGATE USED IN CONCRETE OR CONCRETE MASONRY			
	Concrete: siliceous or carbonate Concrete Masonry: siliceous or carbonate; solid clay brick	Concrete: sand-lightweight Concrete Masonry: clay tile; hollow clay brick; concrete masonry units of expanded shale and <20% sand	Concrete: lightweight Concrete Masonry: concrete masonry units of expanded shale, expanded clay, expanded slag, or pumice < 20% sand	Concrete Masonry: concrete masonry units of expanded slag, expanded clay, or pumice
Portland cement-sand plaster	1.00	0.75[a]	0.75[a]	0.50[a]
Gypsum-sand plaster	1.25	1.00	1.00	1.00
Gypsum-vermiculite or perlite plaster	1.75	1.50	1.25	1.25
Gypsum wallboard	3.00	2.25	2.25	2.25

For SI: 1 inch = 25.4 mm.

a. For portland cement-sand plaster $^5/_8$ inch or less in thickness and applied directly to the concrete or concrete masonry on the nonfire-exposed side of the wall, the multiplying factor shall be 1.00.

TABLE 721.2.1.4(2)
TIME ASSIGNED TO FINISH MATERIALS ON FIRE-EXPOSED SIDE OF WALL

FINISH DESCRIPTION	TIME (minute)
Gypsum wallboard	
$^3/_8$ inch	10
½ inch	15
$^5/_8$ inch	20
2 layers of $^3/_8$ inch	25
1 layer $^3/_8$ inch, 1 layer ½ inch	35
2 layers ½ inch	40
Type X gypsum wallboard	
½ inch	25
$^5/_8$ inch	40
Portland cement-sand plaster applied directly to concrete masonry	See Note a

Portland cement-sand plaster on metal lath ¾ inch $^{7}/_{8}$ inch 1 inch	 20 25 30
Gypsum sand plaster on 3/8-inch gypsum lath ½ inch $^{5}/_{8}$ inch ¾ inch	 35 40 50
Gypsum sand plaster on metal lath ¾ inch $^{7}/_{8}$ inch 1 inch	 50 60 80

For SI: 1 inch = 25.4 mm.

a. The actual thickness of portland cement-sand plaster, provided it is $^{5}/_{8}$ inch or less in thickness, shall be permitted to be included in determining the equivalent thickness of the masonry for use in Table 721.3.2.

721.2.1.4.3 Nonsymmetrical assemblies. For a wall having no finish on one side or different types or thicknesses of finish on each side, the calculation procedures of Sections 721.2.1.4.1 and 721.2.1.4.2 shall be performed twice, assuming either side of the wall to be the fire-exposed side. The fire-resistance rating of the wall shall not exceed the lower of the two values.

Exception: For an exterior wall with a fire separation distance greater than 5 feet (1524 mm) the fire shall be assumed to occur on the interior side only.

721.2.1.4.4 Minimum concrete fire-resistance rating. Where finishes applied to one or both sides of a concrete wall contribute to the fire-resistance rating, the concrete alone shall provide not less than one-half of the total required fire-resistance rating. Additionally, the contribution to the fire resistance of the finish on the nonfire-exposed side of a load-bearing wall shall not exceed one-half the contribution of the concrete alone.

721.2.1.4.5 Concrete finishes. Finishes on concrete walls that are assumed to contribute to the total fire-resistance rating of the wall shall comply with the installation requirements of Section 721.3.2.5.

721.2.2 Concrete floor and roof slabs. Reinforced and prestressed floors and roofs shall comply with Section 721.2.2.1. Multicourse floors and roofs shall comply with Sections 721.2.2.2 and 721.2.2.3, respectively.

721.2.2.1 Reinforced and prestressed floors and roofs. The minimum thicknesses of reinforced and prestressed concrete floor or roof slabs for fire-resistance ratings of 1 hour to 4 hours are shown in Table 721.2.2.1.

TABLE 721.2.2.1
MINIMUM SLAB THICKNESS (inches)

CONCRETE TYPE	FIRE-RESISTANCE RATING (hour)				
	1	1½	2	3	4
Siliceous	3.5	4.3	5.0	6.2	7.0
Carbonate	3.2	4.0	4.6	5.7	6.6
Sand-lightweight	2.7	3.3	3.8	4.6	5.4
Lightweight	2.5	3.1	3.6	4.4	5.1

For SI: 1 inch = 25.4 mm.

721.2.2.1.1 Hollow-core prestressed slabs. For hollow-core prestressed concrete slabs in which the cores are of constant cross section throughout the length, the equivalent thickness shall be permitted to be obtained by dividing the net cross-sectional area of the slab including grout in the joints, by its width.

721.2.2.1.2 Slabs with sloping soffits. The thickness of slabs with sloping soffits (see Figure 721.2.2.1.2) shall be determined at a distance 2*t* or 6 inches (152 mm), whichever is less, from the point of minimum thickness, where *t* is the minimum thickness.

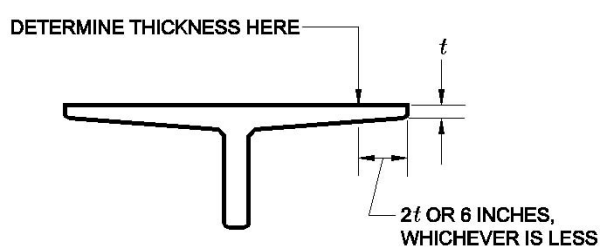

For SI: 1 inch = 25.4 mm.

FIGURE 721.2.2.1.2
DETERMINATION OF SLAB THICKNESS

FOR SLOPING SOFFITS

721.2.2.1.3 Slabs with ribbed soffits. The thickness of slabs with ribbed or undulating soffits (see Figure 721.2.2.1.3) shall be determined by one of the following expressions, whichever is applicable:

For $s > 4t$, the thickness to be used shall be t

For $s \leq 2t$, the thickness to be used shall be t_e

For $4t > s > 2t$, the thickness to be used shall be

$$t + \left(\frac{4t}{s} - 1\right)(t_e - t) \qquad \textbf{(Equation 7-5)}$$

where:
t = Minimum thickness.
s = Spacing of ribs or undulations.
t_e = Equivalent thickness of the slab calculated as the net area of the slab divided by the width, in which the maximum thickness used in the calculation shall not exceed $2t$.

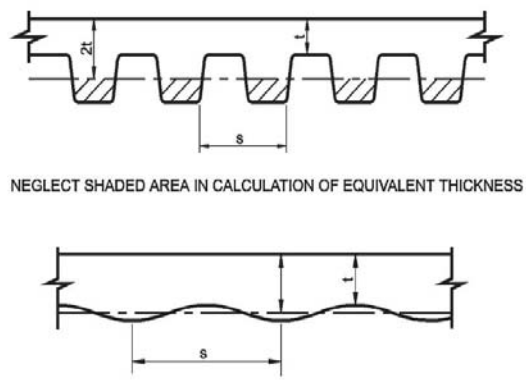

For SI: 1 inch = 25.4 mm.

FIGURE 721.2.2.1.3
SLABS WITH RIBBED OR UNDULATING SOFFITS

721.2.2.2 Multicourse floors. The fire-resistance ratings of floors that consist of a base slab of concrete with a topping (overlay) of a different

type of concrete shall comply with Figure 721.2.2.2.

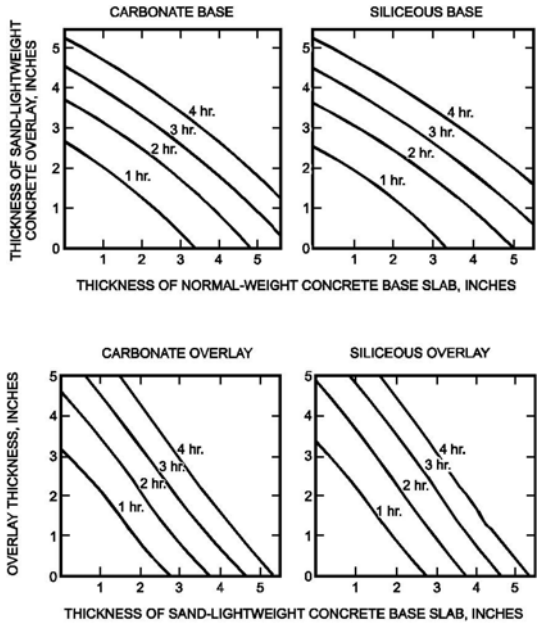

For SI: 1 inch = 25.4 mm.

FIGURE 721.2.2.2
FIRE-RESISTANCE RATINGS FOR TWO-COURSE CONCRETE FLOORS

721.2.2.3 Multicourse roofs. The fire-resistance ratings of roofs which consist of a base slab of concrete with a topping (overlay) of an insulating concrete or with an insulating board and built-up roofing shall comply with Figures 721.2.2.3(1) and 721.2.2.3(2).

721.2.2.3.1 Heat transfer. For the transfer of heat, three-ply built-up roofing contributes 10 minutes to the fire-resistance rating. The fire-resistance rating for concrete assemblies such as those shown in Figure 721.2.2.3(1) shall be increased by 10 minutes. This increase is not applicable to those shown in Figure 721.2.2.3(2).

721.2.2.4 Joints in precast slabs. Joints between adjacent precast concrete slabs need not be considered in calculating the slab thickness provided that a concrete topping at least 1 inch (25 mm) thick is used. Where no concrete topping is used, joints must be grouted to a depth of at

least one-third the slab thickness at the joint, but not less than 1 inch (25 mm), or the joints must be made fire resistant by other approved methods.

721.2.3 Concrete cover over reinforcement. The minimum thickness of concrete cover over reinforcement in concrete slabs, reinforced beams and prestressed beams shall comply with this section.

721.2.3.1 Slab cover. The minimum thickness of concrete cover to the positive moment reinforcement shall comply with Table 721.2.3(1) for reinforced concrete and Table 721.2.3(2) for prestressed concrete. These tables are applicable for solid or hollow-core one-way or two-way slabs with flat undersurfaces. These tables are applicable to slabs that are either cast in place or precast. For precast prestressed concrete not covered elsewhere, the procedures contained in PCI MNL 124 shall be acceptable.

721.2.3.2 Reinforced beam cover. The minimum thickness of concrete cover to the positive moment reinforcement (bottom steel) for reinforced concrete beams is shown in Table 721.2.3(3) for fire-resistance ratings of 1 hour to 4 hours.

721.2.3.3 Prestressed beam cover. The minimum thickness of concrete cover to the positive moment prestressing tendons (bottom steel) for restrained and unrestrained prestressed concrete beams and stemmed units shall comply with the values shown in Tables 721.2.3(4) and 721.2.3(5) for fire-resistance ratings of 1 hour to 4 hours. Values in Table 721.2.3(4) apply to beams 8 inches (203 mm) or greater in width. Values in Table 721.2.3(5) apply to beams or stems of any width, provided the cross-section area is not less than 40 square inches (25 806 mm^2). In case of differences between the values determined from Table 721.2.3(4) or 721.2.3(5), it is permitted to use the smaller value. The concrete cover shall be calculated in accordance with Section 721.2.3.3.1. The minimum concrete cover for nonprestressed reinforcement in prestressed concrete beams shall comply with Section 721.2.3.2.

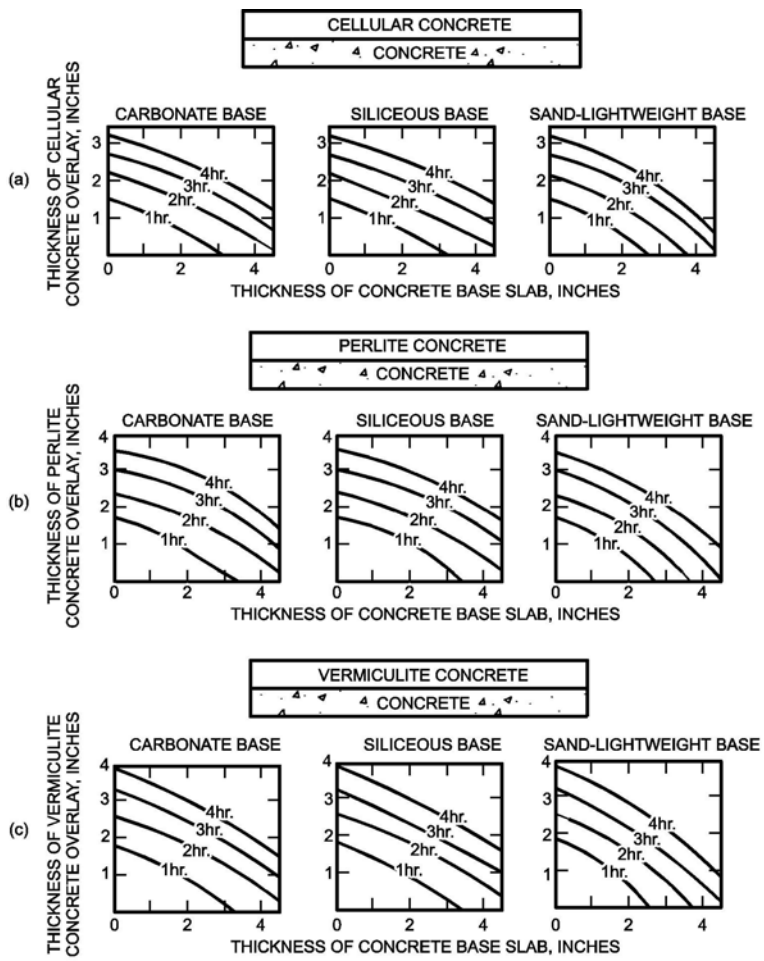

For SI: 1 inch = 25.4 mm.

FIGURE 721.2.2.3(1)
FIRE-RESISTANCE RATINGS FOR CONCRETE ROOF ASSEMBLIES

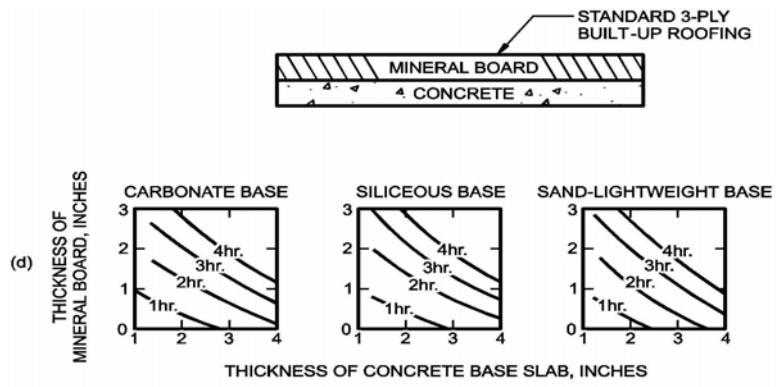

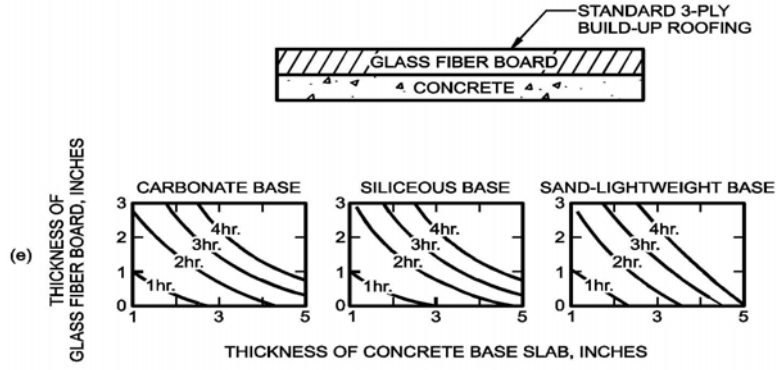

For SI: 1 inch = 25.4 mm.

FIGURE 721.2.2.3(2)
FIRE-RESISTANCE RATINGS FOR CONCRETE ROOF ASSEMBLIES

TABLE 721.2.3(1)
COVER THICKNESS FOR REINFORCED CONCRETE FLOOR OR ROOF SLABS (inches)

CONCRETE AGGREGATE TYPE	FIRE-RESISTANCE RATING (hours)	
	Restrained	Unrestrained

	1	1 ½	2	3	4	1	1 ½	2	3	4
Siliceous	¾	¾	¾	¾	¾	¾	¾	1	1 ¼	1 5/8
Carbonate	¾	¾	¾	¾	¾	¾	¾	¾	1 ¼	1 ¼
Sand-lightweight or lightweight	¾	¾	¾	¾	¾	¾	¾	¾	1 ¼	1 ¼

For SI: 1 inch = 25.4 mm.

TABLE 721.2.3(2)
COVER THICKNESS FOR PRESTRESSED CONCRETE FLOOR OR ROOF SLABS (inches)

CONCRETE AGGREGATE TYPE	FIRE-RESISTANCE RATING (hours)									
	Restrained					Unrestrained				
	1	1 ½	2	3	4	1	1 ½	2	3	4
Siliceous	¾	¾	¾	¾	¾	1 1/8	1 ½	1 ¾	2 3/8	2 ¾
Carbonate	¾	¾	¾	¾	¾	1	1 3/8	1 5/8	2 1/8	2 ¼
Sand-lightweight or lightweight	¾	¾	¾	¾	¾	1	1 3/8	1 ½	2	2 ¼

For SI: 1 inch = 25.4 mm.

TABLE 721.2.3(3)
MINIMUM COVER FOR MAIN REINFORCING BARS OF REINFORCED CONCRETE BEAMS[c] (APPLICABLE TO ALL TYPES OF STRUCTURAL CONCRETE)

RESTRAINED OR UNRESTRAINED[a]	BEAM WIDTH[b] (inches)	FIRE-RESISTANCE RATING (hours)				
		1	1 ½	2	3	4
Restrained	5	¾	¾	¾	1[a]	1 ¼ [a]
	7	¾	¾	¾	¾	¾
	≥ 10	¾	¾	¾	¾	¾
Unrestrained	5	¾	1	1 ¼	—	—
	7	¾	¾	¾	1 ¾	3
	≥ 10	¾	¾	¾	1	1 ¾

For SI: 1 inch = 25.4 mm, 1 foot = 304.8 mm.

a. Tabulated values for restrained assemblies apply to beams spaced more than 4 feet on center. For restrained beams spaced 4 feet or less on center, minimum cover of ¾ inch is adequate for ratings of 4 hours or less.

b. For beam widths between the tabulated values, the minimum cover thickness can be determined by direct interpolation.

c. The cover for an individual reinforcing bar is the minimum thickness of concrete between the surface of the bar and the fire-exposed surface of the beam. For beams in which several bars are used, the cover for corner bars used in the calculation shall be reduced to one-half of the actual value. The cover for an individual bar must be not less than one-half of the value given in Table 721.2.3(3) nor less than ¾ inch.

TABLE 721.2.3(4)
MINIMUM COVER FOR PRESTRESSED CONCRETE BEAMS 8 INCHES OR GREATER IN WIDTH

RESTRAINED OR UNRESTRAINED[a]	CONCRETE AGGREGATE TYPE	BEAM WIDTH[b] (inches)	FIRE-RESISTANCE RATING (hours)				
			1	1 ½	2	3	4

Restrained	Carbonate or siliceous Carbonate or siliceous Sand lightweight Sand lightweight	8 ≥ 12 8 ≥ 12	1 ½ 1 ½ 1 ½ 1 ½	1 ½ 1 ½ 1 ½ 1 ½	1 ½ 1 ½ 1 ½ 1 ½	1 ¾ [a] 11/2 11/2 11/2	2 ½ [a] 1 7/8 [a] 2[a] 1 5/8 [a]
Unrestrained	Carbonate or siliceous Carbonate or siliceous Sand lightweight Sand lightweight	8 ≥ 12 8 ≥ 12	1 ½ 1 ½ 1 ½ 1 ½	1 ¾ 1 ½ 1 ½ 1 ½	2 ½ 1 7/8 [a] 2 1 5/8	5[c] 2 ½ 3 ¼ 2	— 3 — 2 ½

For SI: 1 inch = 25.4 mm, 1 foot = 304.8 mm.

a. Tabulated values for restrained assemblies apply to beams spaced more than 4 feet on center. For restrained beams spaced 4 feet or less on center, minimum cover of ¾ inch is adequate for 4-hour ratings or less.

b. For beam widths between 8 inches and 12 inches, minimum cover thickness can be determined by direct interpolation.

c. Not practical for 8-inch-wide beam but shown for purposes of interpolation.

TABLE 721.2.3(5) MINIMUM COVER FOR PRESTRESSED CONCRETE BEAMS OF ALL WIDTHS

RESTRAINED OR UNRESTRAINED[a]	CONCRETE AGGREGATE TYPE	BEAM AREA[b] A (square inches)	FIRE-RESISTANCE RATING (hours)				
			1	1 ½	2	3	4
Restrained	All	40 ≤ A ≤ 150	1 ½	1 ½	2	2 ½	—
	Carbonate or siliceous	150 < A ≤ 300	1 ½	1 ½	1 ½	1 ¾	2 ½
		300 < A	1 ½	1 ½	1 ½	1 ½	2
	Sand lightweight	150 < A	1 ½	1 ½	1 ½	1 ½	2
Unrestrained	All	40 ≤ A ≤ 150	2	2 ½	—	—	—
	Carbonate or siliceous	150 < A ≤ 300	1 ½	1 ¾	2 ½	—	—
		300 < A	1 ½	1 ½	2	3[c]	4[c]
	Sand lightweight	150 < A	1 ½	1 ½	2	3[c]	4[c]

For SI: 1 inch = 25.4 mm, 1 foot = 304.8 mm.

a. Tabulated values for restrained assemblies apply to beams spaced more than 4 feet on center. For restrained beams spaced 4 feet or less on center, minimum cover of ¾ inch is adequate for 4-hour ratings or less.

b. The cross-sectional area of a stem is permitted to include a portion of the area in the flange, provided the width of the flange used in the calculation does not exceed three times the average width of the stem.

c. U-shaped or hooped stirrups spaced not to exceed the depth of the member and having a minimum cover of 1 inch shall be provided.

721.2.3.3.1 Calculating concrete cover. The concrete cover for an individual tendon is the minimum thickness of concrete between the surface of the tendon and the fire-exposed surface of the beam, except that for ungrouted ducts, the assumed cover thickness is the minimum thickness of concrete between the surface of the duct and the fire-exposed surface of the beam. For beams in which two or more tendons are used, the cover is assumed to be the average of the minimum cover of the individual tendons. For corner tendons (tendons equal distance from the bottom and side), the minimum cover used in the calculation shall be one-half the actual value. For stemmed members with two or

more prestressing tendons located along the vertical centerline of the stem, the average cover shall be the distance from the bottom of the member to the centroid of the tendons. The actual cover for any individual tendon shall not be less than one-half the smaller value shown in Tables 721.2.3(4) and 721.2.3(5), or 1 inch (25 mm), whichever is greater.

721.2.4 Concrete columns. Concrete columns shall comply with this section.

TABLE 721.2.4
MINIMUM DIMENSION OF CONCRETE COLUMNS (inches)

TYPES OF CONCRETE	FIRE-RESISTANCE RATING (hours)				
	1	1 ½	2a	3a	4b
Siliceous	8	9	10	12	14
Carbonate	8	9	10	11	12
Sand-lightweight	8	8 ½	9	10 ½	12

For SI: 1 inch = 25 mm.

a. The minimum dimension is permitted to be reduced to 8 inches for rectangular columns with two parallel sides at least 36 inches in length.

b. The minimum dimension is permitted to be reduced to 10 inches for rectangular columns with two parallel sides at least 36 inches in length.

721.2.4.1 Minimum size. The minimum overall dimensions of reinforced concrete columns for fire-resistance ratings of 1 hour to 4 hours for exposure to fire on all sides shall comply with this section.

721.2.4.1.1 Concrete strength less than or equal to 12,000 psi. For columns made with concrete having a specified compressive strength, f'_c, of less than or equal to 12,000 psi (82.7 MPa), the minimum dimension shall comply with Table 721.2.4.

721.2.4.1.2 Concrete strength greater than 12,000 psi. For columns made with concrete having a specified compressive strength, f'_c, greater than 12,000 psi (82.7 MPa), for fire-resistance ratings of 1 hour to 4 hours the minimum dimension shall be 24 inches (610 mm).

721.2.4.2 Minimum cover for R/C columns. The minimum thickness of concrete cover to the main longitudinal reinforcement in columns, regardless of the type of aggregate used in the concrete and the specified compressive strength of concrete, f'_c, shall not be less than 1 inch (25 mm)

times the number of hours of required fire resistance or 2 inches (51 mm), whichever is less.

721.2.4.3 Tie and spiral reinforcement. For concrete columns made with concrete having a specified compressive strength, f'_c, greater than 12,000 psi (82.7 MPa), tie and spiral reinforcement shall comply with the following:

1. The free ends of rectangular ties shall terminate with a 135-degree (2.4 rad) standard tie hook.

2. The free ends of circular ties shall terminate with a 90-degree (1.6 rad) standard tie hook.

3. The free ends of spirals, including at lap splices, shall terminate with a 90-degree (1.6 rad) standard tie hook.

The hook extension at the free end of ties and spirals shall be the larger of six bar diameters and the extension required by Section 7.1.3 of ACI 318. Hooks shall project into the core of the column.

721.2.4.4 Columns built into walls. The minimum dimensions of Table 721.2.4 do not apply to a reinforced concrete column that is built into a concrete or masonry wall provided all of the following are met:

1. The fire-resistance rating for the wall is equal to or greater than the required rating of the column;

2. The main longitudinal reinforcing in the column has cover not less than that required by Section 721.2.4.2; and

3. Openings in the wall are protected in accordance with Table 715.4.

Where openings in the wall are not protected as required by Section 715.4, the minimum dimension of columns required to have a fire-resistance rating of 3 hours or less shall be 8 inches (203 mm), and 10 inches (254 mm) for columns required to have a fire-resistance rating of 4 hours, regardless of the type of aggregate used in the concrete.

721.2.4.5 Precast cover units for steel columns. See Section 721.5.1.4.

721.3 Concrete masonry. The provisions of this section contain procedures by which the fire-resistance ratings of concrete masonry are established by calculations.

721.3.1 Equivalent thickness. The equivalent thickness of concrete masonry construction shall be determined in accordance with the provisions of this section.

721.3.1.1 Concrete masonry unit plus finishes. The equivalent thickness of concrete masonry assemblies, T_{ea}, shall be computed as the sum of the equivalent thickness of the concrete masonry unit, T_e, as determined by Section 721.3.1.2, 721.3.1.3 or 721.3.1.4, plus the equivalent thickness of finishes, T_{ef}, determined in accordance with Section 721.3.2:

$$T_{ea} = T_e + T_{ef} \qquad \textbf{(Equation 7-6)}$$

721.3.1.2 Ungrouted or partially grouted construction. T_e shall be the value obtained for the concrete masonry unit determined in accordance with ASTM C 140.

721.3.1.3 Solid grouted construction. The equivalent thickness, T_e, of solid grouted concrete masonry units is the actual thickness of the unit.

721.3.1.4 Airspaces and cells filled with loose-fill material. The equivalent thickness of completely filled hollow concrete masonry is the actual thickness of the unit when loose-fill materials are: sand, pea gravel, crushed stone, or slag that meet ASTM C 33 requirements; pumice, scoria, expanded shale, expanded clay, expanded slate, expanded slag, expanded fly ash, or cinders that comply with ASTM C 331; or perlite or vermiculite meeting the requirements of ASTM C 549 and ASTM C 516, respectively.

721.3.2 Concrete masonry walls. The fire-resistance rating of walls and partitions constructed of concrete masonry units shall be determined from Table 721.3.2. The rating shall be based on the equivalent thickness of the masonry and type of aggregate used.

721.3.2.1 Finish on nonfire-exposed side. Where plaster or gypsum wallboard is applied to the side of the wall not exposed to fire, the contribution of the finish to the total fire-resistance rating shall be determined as follows: The thickness of gypsum wallboard or plaster shall be corrected by multiplying the actual thickness of the finish by applicable

factor determined from Table 721.2.1.4(1). This corrected thickness of finish shall be added to the equivalent thickness of masonry and the fire-resistance rating of the masonry and finish determined from Table 721.3.2.

721.3.2.2 Finish on fire-exposed side. Where plaster or gypsum wallboard is applied to the fire-exposed side of the wall, the contribution of the finish to the total fire-resistance rating shall be determined as follows: The time assigned to the finish as established by Table 721.2.1.4(2) shall be added to the fire-resistance rating determined in Section 721.3.2 for the masonry alone, or in Section 721.3.2.1 for the masonry and finish on the nonfire-exposed side.

TABLE 721.3.2
MINIMUM EQUIVALENT THICKNESS (inches)
OF BEARING OR NONBEARING CONCRETE MASONRY WALLS[a,b,c,d]

	FIRE-RESISTANCE RATING (hours)														
TYPE OF AGGREGATE	**½**	**¾**	**1**	**1 ¼**	**1 ½**	**1 ¾**	**2**	**2 ¼**	**2 ½**	**2 ¾**	**3**	**3 ¼**	**3 ½**	**3 ¾**	**4**
Pumice or expanded slag	1.5	1.9	2.1	2.5	2.7	3.0	3.2	3.4	3.6	3.8	4.0	4.2	4.4	4.5	4.7
Expanded shale, clay or slate	1.8	2.2	2.6	2.9	3.3	3.4	3.6	3.8	4.0	4.2	4.4	4.6	4.8	4.9	5.1
Limestone, cinders or unexpanded slag	1.9	2.3	2.7	3.1	3.4	3.7	4.0	4.3	4.5	4.8	5.0	5.2	5.5	5.7	5.9
Calcareous or siliceous gravel	2.0	2.4	2.8	3.2	3.6	3.9	4.2	4.5	4.8	5.0	5.3	5.5	5.8	6.0	6.2

For SI: 1 inch = 25.4 mm.

a. Values between those shown in the table can be determined by direct interpolation.

b. Where combustible members are framed into the wall, the thickness of solid material between the end of each member and the opposite face of the wall, or between members set in from opposite sides, shall not be less than 93 percent of the thickness shown in the table.

c. Requirements of ASTM C 55, ASTM C 73, ASTM C 90 or ASTM C 744 shall apply.

d. Minimum required equivalent thickness corresponding to the hourly fire-resistance rating for units with a combination of aggregate shall be determined by linear interpolation based on the percent by volume of each aggregate used in manufacture.

721.3.2.3 Nonsymmetrical assemblies. For a wall having no finish on one side or having different types or thicknesses of finish on each side, the calculation procedures of this section shall be performed twice, assuming either side of the wall to be the fire-exposed side. The fire-resistance rating of the wall shall not exceed the lower of the two values calculated.

Exception: For exterior walls with a fire separation distance greater than 5 feet (1524 mm) the fire shall be assumed to occur on the interior side only.

721.3.2.4 Minimum concrete masonry fire-resistance rating. Where the finish applied to a concrete masonry wall contributes to its fire-resistance rating, the masonry alone shall provide not less than one-half the total required fire-resistance rating.

721.3.2.5 Attachment of finishes. Installation of finishes shall be as follows:

1. Gypsum wallboard and gypsum lath applied to concrete masonry or concrete walls shall be secured to wood or steel furring members spaced not more than 16 inches (406 mm) on center (o.c.).

2. Gypsum wallboard shall be installed with the long dimension parallel to the furring members and shall have all joints finished.

3. Other aspects of the installation of finishes shall comply with the applicable provisions of Chapters 7 and 25.

721.3.3 Multiwythe masonry walls. The fire-resistance rating of wall assemblies constructed of multiple wythes of masonry materials shall be permitted to be based on the fire-resistance rating period of each wythe and the continuous airspace between each wythe in accordance with the following formula:

$$R_A = (R_1^{0.59} + R_2^{0.59} + \ldots + R_n^{0.59} + A_1 + A_2 + \ldots + A_n)^{1.7}$$

(Equation 7-7)

where:

R_A = Fire-resistance rating of the assembly (hours).

$R_1, R_2, \ldots, R_n$ = Fire-resistance rating of wythes for 1, 2, n (hours), respectively.

$A_1, A_2, \ldots, A_n$ = 0.30, factor for each continuous airspace for 1, 2, ...n, respectively, having a depth of ½ inch (12.7 mm) or more between wythes.

721.3.4 Concrete masonry lintels. Fire-resistance ratings for concrete masonry lintels shall be determined based upon the nominal thickness of the lintel and the minimum thickness of concrete masonry or concrete, or any combination thereof, covering the main reinforcing bars, as determined

according to Table 721.3.4, or by approved alternate methods.

TABLE 721.3.4
MINIMUM COVER OF LONGITUDINAL REINFORCEMENT IN FIRE-RESISTANCE-RATED REINFORCED CONCRETE MASONRY LINTELS (inches)

NOMINAL WIDTH OF LINTEL (inches)	FIRE-RESISTANCE RATING (hours)			
	1	2	3	4
6	1 ½	2	—	—
8	1 ½	1 ½	1 ¾	3
10 or greater	1 ½	1 ½	1 ½	1 ¾

For SI: 1 inch = 25.4 mm.

721.3.5 Concrete masonry columns. The fire-resistance rating of concrete masonry columns shall be determined based upon the least plan dimension of the column in accordance with Table 721.3.5 or by approved alternate methods.

TABLE 721.3.5
MINIMUM DIMENSION OF CONCRETE MASONRY COLUMNS (inches)

FIRE-RESISTANCE RATING (hours)			
1	2	3	4
8 inches	10 inches	12 inches	14 inches

For SI: 1 inch = 25.4 mm.

721.4 Clay brick and tile masonry. The provisions of this section contain procedures by which the fire-resistance ratings of clay brick and tile masonry are established by calculations.

721.4.1 Masonry walls. The fire-resistance rating of masonry walls shall be based upon the equivalent thickness as calculated in accordance with this section. The calculation shall take into account finishes applied to the wall and airspaces between wythes in multiwythe construction.

721.4.1.1 Equivalent thickness. The fire-resistance ratings of walls or partitions constructed of solid or hollow clay masonry units shall be determined from Table 721.4.1(1) or 721.4.1(2). The equivalent thickness of the clay masonry unit shall be determined by Equation 7-8 when using Table 721.4.1(1). The fire-resistance rating determined from Table 721.4.1(1) shall be permitted to be used in the calculated fire-resistance rating procedure in Section 721.4.2.

$T_e = V_n / LH$ **(Equation 7-8)**

where:

T_e = The equivalent thickness of the clay masonry unit (inches).

V_n = The net volume of the clay masonry unit (inch^3).

L = The specified length of the clay masonry unit (inches).

H = The specified height of the clay masonry unit (inches).

721.4.1.1.1 Hollow clay units. The equivalent thickness, T_e, shall be the value obtained for hollow clay units as determined in accordance with Equation 7-8. The net volume, V_n, of the units shall be determined using the gross volume and percentage of void area determined in accordance with ASTM C 67.

TABLE 721.4.1(1)
FIRE-RESISTANCE PERIODS OF CLAY MASONRY WALLS

MATERIAL TYPE	MINIMUM REQUIRED EQUIVALENT THICKNESS FOR FIRE RESISTANCE[a, b, c] (inches)			
	1 hour	2 hour	3 hour	4 hour
Solid brick of clay or shale[d]	2.7	3.8	4.9	6.0
Hollow brick or tile of clay or shale, unfilled	2.3	3.4	4.3	5.0
Hollow brick or tile of clay or shale, grouted or filled with materials specified in Section 721.4.1.1.3	3.0	4.4	5.5	6.6

For SI: 1 inch = 25.4 mm.

a. Equivalent thickness as determined from Section 721.4.1.1.

b. Calculated fire resistance between the hourly increments listed shall be determined by linear interpolation.

c. Where combustible members are framed in the wall, the thickness of solid material between the end of each member and the opposite face of the wall, or between members set in from opposite sides, shall not be less than 93 percent of the thickness shown.

d. For units in which the net cross-sectional area of cored brick in any plane parallel to the surface containing the cores is at least 75 percent of the gross cross-sectional area measured in the same plane.

TABLE 721.4.1(2)
FIRE-RESISTANCE RATINGS FOR BEARING STEEL FRAME BRICK VENEER WALLS OR PARTITIONS

WALL OR PARTITION ASSEMBLY	PLASTER SIDE EXPOSED (hours)	BRICK FACED SIDE EXPOSED (hours)

Outside facing of steel studs: ½" wood fiberboard sheathing next to studs, ¾" airspace formed with ¾" x $1^5/_8$" wood strips placed over the fiberboard and secured to the studs; metal or wire lath nailed to such strips, 3¾" brick veneer held in place by filling ¾" airspace between the brick and lath with mortar. Inside facing of studs: ¾" unsanded gypsum plaster on metal or wire lath attached to $^5/_{16}$" wood strips secured to edges of the studs.	1.5	4
Outside facing of steel studs: 1" insulation board sheathing attached to studs, 1" airspace, and 3¾" brick veneer attached to steel frame with metal ties every 5th course. Inside facing of studs: $^7/_8$" sanded gypsum plaster (1:2 mix) applied on metal or wire lath attached directly to the studs.	1.5	4
Same as above except use $^7/_8$" vermiculite—gypsum plaster or 1" sanded gypsum plaster (1:2 mix) applied to metal or wire.	2	4
Outside facing of steel studs: ½" gypsum sheathing board, attached to studs, and ¾" brick veneer attached to steel frame with metal ties every 5th course. Inside facing of studs: ½" sanded gypsum plaster (1:2 mix) applied to ½" perforated gypsum lath securely attached to studs and having strips of metal lath 3 inches wide applied to all horizontal joints of gypsum lath.	2	4

For SI: 1 inch = 25.4 mm.

721.4.1.1.2 Solid grouted clay units. The equivalent thickness of solid grouted clay masonry units shall be taken as the actual thickness of the units.

721.4.1.1.3 Units with filled cores. The equivalent thickness of the hollow clay masonry units is the actual thickness of the unit when completely filled with loose-fill materials of: sand, pea gravel, crushed stone, or slag that meet ASTM C 33 requirements; pumice, scoria, expanded shale, expanded clay, expanded slate, expanded slag, expanded fly ash, or cinders in compliance with ASTM C 331; or perlite or vermiculite meeting the requirements of ASTM C 549 and ASTM C 516, respectively.

721.4.1.2 Plaster finishes. Where plaster is applied to the wall, the total fire-resistance rating shall be determined by the formula:

$$R = (Rn^{0.59} + pl)^{1.7}$$ **(Equation 7-9)**

where:

R = The fire-resistance rating of the assembly (hours).

*R*n = The fire-resistance rating of the individual wall (hours).

pl = Coefficient for thickness of plaster.

Values for $Rn^{0.59}$ for use in Equation 7-9 are given in Table 721.4.1(3). Coefficients for thickness of plaster shall be selected from Table 721.4.1(4) based on the actual thickness of plaster applied to the wall or partition and whether one or two sides of the wall are plastered.

721.4.1.3 Multiwythe walls with airspace. Where a continuous airspace separates multiple wythes of the wall or partition, the total fire-resistance rating shall be determined by the formula:

$$R = (R_1^{0.59} + R_2^{0.59} + ... + R_n^{0.59} + as)^{1.7} \qquad \textbf{(Equation 7-10)}$$

where:

R = The fire-resistance rating of the assembly (hours).

R_1, R_2 and R_n = The fire-resistance rating of the individual wythes (hours).

as = Coefficient for continuous airspace.

Values for $R_n^{0.59}$ for use in Equation 7-10 are given in Table 721.4.1(3). The coefficient for each continuous airspace of ½ inch to 3½ inches (12.7 to 89 mm) separating two individual wythes shall be 0.3.

TABLE 721.4.1(3)
VALUES OF $R_n^{0.59}$

$R_n^{0.59}$	R (hours)
1	1.0
2	1.50
3	1.91
4	2.27

TABLE 721.4.1(4)
COEFFICIENTS FOR PLASTER, pl^a

THICKNESS OF PLASTER (inch)	ONE SIDE	TWO SIDE
½	0.3	0.6
5/8	0.37	0.75
¾	0.45	0.90

For SI: 1 inch = 25.4 mm.
Values listed in table are for 1:3 sanded gypsum plaster.

TABLE 721.4.1(5)

REINFORCED MASONRY LINTELS

NOMINAL LINTEL WIDTH (inches)	MINIMUM LONGITUDINAL REINFORCEMENT COVER FOR FIRE RESISTANCE (inch)			
	1 hour	2 hour	3 hour	4 hour
6	1 ½	2	NP	NP
8	1 ½	1 ½	1 ¾	3
10 or more	1 ½	1 ½	1 ½	1 ¾

For SI: 1 inch = 25.4 mm.
NP = Not permitted.

TABLE 721.4.1(6)
REINFORCED CLAY MASONRY COLUMNS

COLUMN SIZE	FIRE-RESISTANCE RATING (hour)			
	1	2	3	4
Minimum column dimension (inches)	8	10	12	14

For SI: 1 inch = 25.4 mm.

721.4.1.4 Nonsymmetrical assemblies. For a wall having no finish on one side or having different types or thicknesses of finish on each side, the calculation procedures of this section shall be performed twice, assuming either side to be the fire-exposed side of the wall. The fire resistance of the wall shall not exceed the lower of the two values determined.

Exception: For exterior walls with a fire separation distance greater than 5 feet (1524 mm), the fire shall be assumed to occur on the interior side only.

721.4.2 Multiwythe walls. The fire-resistance rating for walls or partitions consisting of two or more dissimilar wythes shall be permitted to be determined by the formula:

$$R = (R_1^{0.59} + R_2^{0.59} + ... + R_n^{0.59})^{1.7} \qquad \textbf{(Equation 7-11)}$$

where:

R = The fire-resistance rating of the assembly (hours).

R_1, R_2 and R_n = The fire-resistance rating of the individual wythes (hours).

Values for $R_n^{0.59}$ for use in Equation 7-11 are given in Table 721.4.1(3).

721.4.2.1 Multiwythe walls of different material. For walls that consist of two or more wythes of different materials (concrete or concrete masonry units) in combination with clay masonry units, the fire-resistance rating of the different materials shall be permitted to be determined from Table 721.2.1.1 for concrete; Table 721.3.2 for concrete masonry units or Table 721.4.1(1) or 721.4.1(2) for clay and tile masonry units.

721.4.3 Reinforced clay masonry lintels. Fire-resistance ratings for clay masonry lintels shall be determined based on the nominal width of the lintel and the minimum covering for the longitudinal reinforcement in accordance with Table 721.4.1(5).

721.4.4 Reinforced clay masonry columns. The fire-resistance ratings shall be determined based on the last plan dimension of the column in accordance with Table 721.4.1(6). The minimum cover for longitudinal reinforcement shall be 2 inches (51 mm).

721.5 Steel assemblies. The provisions of this section contain procedures by which the fire-resistance ratings of steel assemblies are established by calculations.

721.5.1 Structural steel columns. The fire-resistance ratings of steel columns shall be based on the size of the element and the type of protection provided in accordance with this section.

721.5.1.1 General. These procedures establish a basis for determining the fire resistance of column assemblies as a function of the thickness of fire-resistant material and, the weight, *W*, and heated perimeter, *D*, of steel columns. As used in these sections, *W* is the average weight of a structural steel column in pounds per linear foot. The heated perimeter, *D*, is the inside perimeter of the fire-resistant material in inches as illustrated in Figure 721.5.1(1).

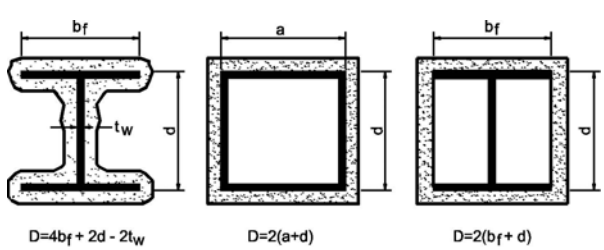

FIGURE 721.5.1(1)
DETERMINATION OF THE HEATED PERIMETER OF STRUCTURAL STEEL COLUMNS

721.5.1.1.1 Nonload-bearing protection. The application of these procedures shall be limited to column assemblies in which the fire-resistant material is not designed to carry any of the load acting on the column.

721.5.1.1.2 Embedments. In the absence of substantiating fire-endurance test results, ducts, conduit, piping, and similar mechanical, electrical, and plumbing installations shall not be embedded in any required fire-resistant materials.

721.5.1.1.3 Weight-to-perimeter ratio. Table 721.5.1(1) contains weight-to-heated-perimeter ratios (*W/D*) for both contour and box fire-resistant profiles, for the wide flange shapes most often used as columns. For different fire-resistant protection profiles or column cross sections, the weight-to-heated-perimeter ratios (*W/D*) shall be determined in accordance with the definitions given in this section.

721.5.1.2 Gypsum wallboard protection. The fire resistance of structural steel columns with weight-to-heated-perimeter ratios (*W/D*) less than or equal to 3.65 and which are protected with Type X gypsum wallboard shall be permitted to be determined from the following expression:

$$R = 130\left[\frac{h(W'/D)}{2}\right]^{0.75} \quad \textbf{(Equation 7-12)}$$

where:

R = Fire resistance (minutes).

h = Total thickness of gypsum wallboard (inches).

D = Heated perimeter of the structural steel column (inches).

W' = Total weight of the structural steel column and gypsum wallboard protection (pounds per linear foot).

$W' = W + 50hD/144$.

721.5.1.2.1 Attachment. The gypsum wallboard shall be supported as illustrated in either Figure 721.5.1(2) for fire-resistance ratings of 4

hours or less, or Figure 721.5.1(3) for fire-resistance ratings of 3 hours or less.

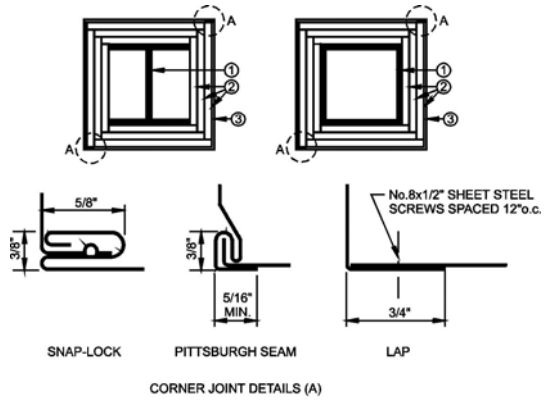

FIGURE 721.5.1(2)
GYPSUM WALLBOARD PROTECTED STRUCTURAL STEEL COLUMNS WITH SHEET STEEL COLUMN COVERS

For SI: 1 inch = 25.4 mm, 1 foot = 305 mm.

1. Structural steel column, either wide flange or tubular shapes.
2. Type X gypsum wallboard in accordance with ASTM C 36. For single-layer applications, the wallboard shall be applied vertically with no horizontal joints. For multiple-layer applications, horizontal joints are permitted at a minimum spacing of 8 feet, provided that the joints in successive layers are staggered at least 12 inches. The total required thickness of wallboard shall be determined on the basis of the specified fire-resistance rating and the weight-to-heated-perimeter ratio (*W/D*) of the column. For fire-resistance ratings of 2 hours or less, one of the required layers of gypsum wallboard may be applied to the exterior of the sheet steel column covers with 1-inch-long Type S screws spaced 1 inch from the wallboard edge and 8 inches on center. For such installations, 0.0149-inch minimum thickness galvanized steel corner beads with 1½-inch legs shall be attached to the wallboard with Type S screws spaced 12 inches on center.
3. For fire-resistance ratings of 3 hours or less, the column covers shall be fabricated from 0.0239-inch minimum thickness galvanized or stainless steel. For 4-hourfire-resistance ratings, the column covers shall be fabricated from 0.0239-inch minimum thickness stainless steel. The column covers shall be erected with the Snap Lock or Pittsburgh joint details. For fire-resistance ratings of 2 hours or less, column covers fabricated from 0.0269-inch minimum thickness galvanized or stainless steel shall be permitted to be erected with lap joints. The lap joints shall be permitted to be located anywhere around the perimeter of the column cover. The lap joints shall be secured with ½-inch-long No. 8 sheet metal screws spaced 12 inches on center.
   The column covers shall be provided with a minimum expansion clearance of $^1/_8$ inch per linear foot between the ends of the cover and any restraining construction.

721.5.1.2.2 Gypsum wallboard equivalent to concrete. The determination of the fire resistance of structural steel columns from Figure 721.5.1(4) is permitted for various thicknesses of gypsum wallboard as a function of the weight-to-heated-perimeter ratio (*W/D*) of the column. For structural steel columns with weight-to-heated-perimeter ratios (*W/D*) greater than 3.65, the thickness of gypsum wallboard required for specified fire-resistance ratings shall be the same as the thickness determined for a *W*14 × 233 wide flange shape.

721.5.1.3 Sprayed fire-resistant materials. The fire resistance of wide-flange structural steel columns protected with sprayed fire-resistant materials, as illustrated in Figure 721.5.1(5), shall be permitted to be determined from the following expression:

$$R = [C_1 (W / D) + C_2]\, h \qquad \textbf{(Equation 7-13)}$$

where:

R = Fire resistance (minutes).

h = Thickness of sprayed fire-resistant material (inches).

D = Heated perimeter of the structural steel column (inches).

$C1$ and $C2$ = Material-dependent constants.

W = Weight of structural steel columns (pounds per linear foot).

The fire resistance of structural steel columns protected with intumescent or mastic fire-resistant coatings shall be determined on the basis of fire-resistance tests in accordance with Section 703.2.

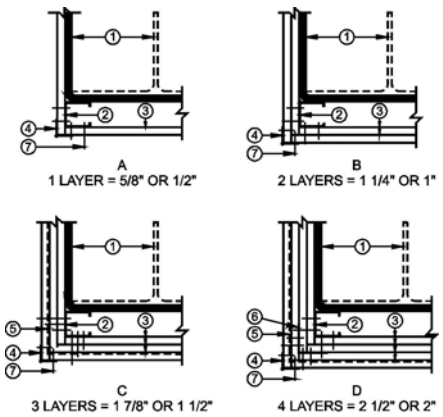

FIGURE 721.5.1(3)
GYPSUM WALLBOARD PROTECTED STRUCTURAL STEEL COLUMNS WITH STEEL STUD/SCREW ATTACHMENT SYSTEM

For SI: 1 inch = 25.4 mm, 1 foot = -305 mm.

1 Structural steel column, either wide flange or tubular shapes.
2 $1^5/_8$-inch deep studs fabricated from 0.0179-inch minimum thickness galvanized steel with $1^5/_{16}$ or $1^7/_{16}$-inch legs. The length of the steel studs shall be ½ inch less than the height of the assembly.
3 Type X gypsum wallboard in accordance with ASTM C 36. For single-layer applications, the wallboard shall be applied vertically with no horizontal joints. For multiple-layer applications, horizontal joints are permitted at a minimum spacing of 8 feet, provided that the joints in successive layers are staggered at least 12 inches. The total required thickness of wallboard shall be determined on the basis of the specified fire-resistance rating and the weight-to-heated-perimeter ratio (*W/D*) of the column.
4 Galvanized 0.0149-inch minimum thickness steel corner beads with 1½-inch legs attached to the wallboard with 1-inch-long Type S screws spaced 12 inches on center.
5 No. 18 SWG steel tie wires spaced 24 inches on center.
6 Sheet metal angles with 2-inch legs fabricated from 0.0221-inch minimum thickness galvanized steel.
7 Type S screws, 1 inch long, shall be used for attaching the first layer of wallboard to the steel studs and the third layer to the sheet metal angles at 24 inches on center. Type S screws 1¾-inch long shall be used for attaching the second layer of wallboard to the steel studs and the fourth layer to the sheet metal angles at 12 inches on center. Type S screws 2¼ inches long shall be used for attaching the third layer of wallboard to the steel studs at 12 inches on center.

721.5.1.3.1 Material-dependent constants. The material-dependent constants, $C1$ and $C2$, shall be determined for specific fire-resistant materials on the basis of standard fire endurance tests in accordance with Section 703.2. Unless evidence is submitted to the building official substantiating a broader application, this expression shall be limited to determining the fire resistance of structural steel columns

with weight-to-heated-perimeter ratios (*W/D*) between the largest and smallest columns for which standard fire-resistance test results are available.

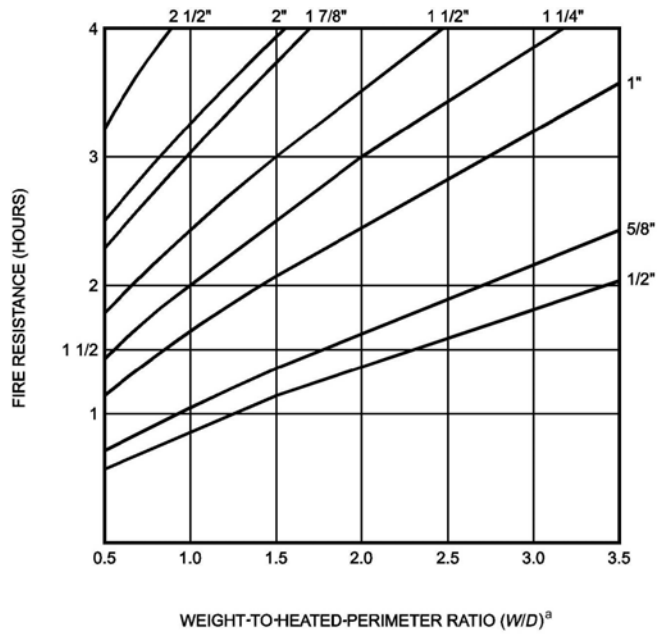

For SI: 1 inch = 25.4 mm, 1 pound per linear foot/inch = 0.059 kg/m/mm.

FIGURE 721.5.1(4)
FIRE RESISTANCE OF STRUCTURAL STEEL COLUMNS PROTECTED WITH VARIOUS THICKNESSES OF TYPE X GYPSUM WALLBOARD

a. The *W/D* ratios for typical wide flange columns are listed in Table 721.5.1(1). For other column shapes, the *W/D* ratios shall be determined in accordance with Section 721.5.1.1.

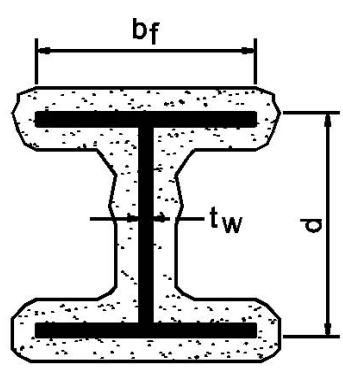

FIGURE 721.5.1(5)
WIDE FLANGE STRUCTURAL STEEL COLUMNS WITH SPRAYED FIRE-RESISTANT MATERIALS

721.5.1.3.2 Identification. Sprayed fire-resistant materials shall be identified by density and thickness required for a given fire-resistance rating.

721.5.1.4 Concrete-protected columns. The fire resistance of structural steel columns protected with concrete, as illustrated in Figure 721.5.1(6) (a) and (b), shall be permitted to be determined from the following expression:

$R = R_o\,(1 + 0.03m)$ **(Equation 7-14)**

where:

$R_o = 10(W/D)^{0.7} + 17(h^{1.6}/k_c^{0.2}) \times [1 + 26\{H/p_c c_c h\,(L+h)\}^{0.8}]$

As used in these expressions:

R = Fire endurance at equilibrium moisture conditions (minutes).

R_o = Fire endurance at zero moisture content (minutes).

m = Equilibrium moisture content of the concrete by volume (percent).

W = Average weight of the steel column (pounds per linear foot).

D = Heated perimeter of the steel column (inches).

h = Thickness of the concrete cover (inches).

k_c = Ambient temperature thermal conductivity of the concrete (Btu/hr ft °F).

H = Ambient temperature thermal capacity of the steel column = 0.11W (Btu/ ft °F).

p_c = Concrete density (pounds per cubic foot).

c_c = Ambient temperature specific heat of concrete (Btu/lb °F).

L = Interior dimension of one side of a square concrete box protection (inches).

721.5.1.4.1 Reentrant space filled. For wide-flange steel columns completely encased in concrete with all reentrant spaces filled [Figure 721.5.1(6)(c)], the thermal capacity of the concrete within the reentrant

spaces shall be permitted to be added to the thermal capacity of the steel column, as follows:

$H = 0.11W + (p_c c_c/144)\,(b_f d - A_s)$ **(Equation 7-15)**

where:

b_f = Flange width of the steel column (inches).

d = Depth of the steel column (inches).

A_s = Cross-sectional area of the steel column (square inches).

721.5.1.4.2 Concrete properties unknown. If specific data on the properties of concrete are not available, the values given in Table 721.5.1(2) are permitted.

721.5.1.4.3 Minimum concrete cover. For structural steel column encased in concrete with all reentrant spaces filled, Figure 721.5.1(6)(c) and Tables 721.5.1(7) and 721.5.1(8) indicate the thickness of concrete cover required for various fire-resistance ratings for typical wide-flange sections. The thicknesses of concrete indicated in these tables also apply to structural steel columns larger than those listed.

721.5.1.4.4 Minimum precast concrete cover. For structural steel columns protected with precast concrete column covers as shown in Figure 721.5.1(6)(a), Tables 721.5.1(9) and 721.5.1(10) indicate the thickness of the column covers required for various fire-resistance ratings for typical wide-flange shapes. The thicknesses of concrete given in these tables also apply to structural steel columns larger than those listed.

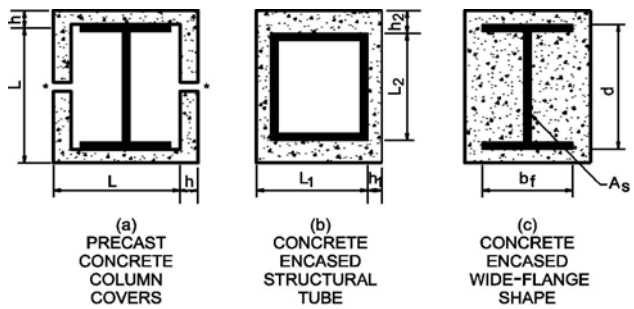

For SI: 1 inch = 25.4 mm.

FIGURE 721.5.1(6)
CONCRETE PROTECTED STRUCTURAL STEEL COLUMNS

a. When the inside perimeter of the concrete protection is not square, L shall be taken as the average of $L_1$and L_2. When the thickness of concrete cover is not constant, h shall be taken as the average of h_1 and h_2.

b. Joints shall be protected with a minimum 1 inch thickness of ceramic fiber blanket but in no case less than one-half the thickness of the column cover (see Section 721.2.1.3).

721.5.1.4.5 Masonry protection. The fire resistance of structural steel columns protected with concrete masonry units or clay masonry units as illustrated in Figure 721.5.1(7), shall be permitted to be determined from the following expression:

$$R = 0.17(W/D)^{0.7} + [0.285\ (T_e^{1.6}/K^{0.2})]\ [1.0 + 42.7\ \{(A_s/d_m\ T_e)/(0.25p + T_e)\}^{0.8}]$$ **(Equation 7-16)**

where:

R = Fire-resistance rating of column assembly (hours).

W = Average weight of steel column (pounds per foot).

D = Heated perimeter of steel column (inches) [see Figure 721.5.1(7)].

T_e = Equivalent thickness of concrete or clay masonry unit (inches) (see Table 721.3.2 Note a or Section 721.4.1).

K = Thermal conductivity of concrete or clay masonry unit (Btu/hr ft °F) [see Table 721.5.1(3)].

As = Cross-sectional area of steel column (square inches).

dm = Density of the concrete or clay masonry unit (pounds per cubic foot).

p = Inner perimeter of concrete or clay masonry protection (inches) [see Figure 721.5.1(7)].

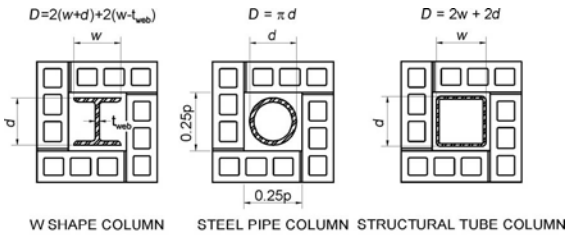

For SI: 1 inch = 25.4 mm.

FIGURE 721.5.1(7)
CONCRETE OR CLAY MASONRY PROTECTED STRUCTURAL STEEL COLUMNS

d = Depth of a wide flange column, outside diameter of pipe column, or outside dimension of structural tubing column (inches).
t_{web} = Thickness of web of wide flange column (inches).
w = Width of flange of wide flange column (inches).

721.5.1.4.6 Equivalent concrete masonry thickness. For structural steel columns protected with concrete masonry, Table 721.5.1(5) gives the equivalent thickness of concrete masonry required for various fire-resistance ratings for typical column shapes. For structural steel columns protected with clay masonry, Table 721.5.1(6) gives the equivalent thickness of concrete masonry required for various fire-resistance ratings for typical column shapes.

721.5.2 Structural steel beams and girders. The fire-resistance ratings of steel beams and girders shall be based upon the size of the element and the type of protection provided in accordance with this section.

721.5.2.1 Determination of fire resistance. These procedures establish a basis for determining resistance of structural steel beams and girders which differ in size from that specified in approved fire-resistance-rated assemblies as a function of the thickness of fire-resistant material and the

weight (*W*) and heated perimeter (*D*) of the beam or girder. As used in these sections, *W* is the average weight of a structural steel member in pounds per linear foot (plf). The heated perimeter, *D*, is the inside perimeter of the fire-resistant material in inches as illustrated in Figure 721.5.2.

721.5.2.1.1 Weight-to-heated perimeter. The weight-to-heated-perimeter ratios (*W/D*), for both contour and box fire-resistant protection profiles, for the wide flange shapes most often used as beams or girders are given in Table 721.5.1(4). For different shapes, the weight-to-heated-perimeter ratios (*W/D*) shall be determined in accordance with the definitions given in this section.

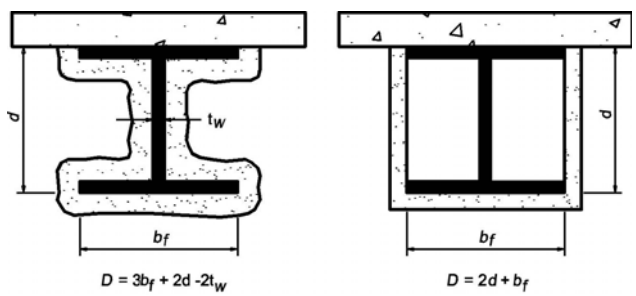

FIGURE 721.5.2
DETERMINATION OF THE HEATED PERIMETER OF STRUCTURAL STEEL BEAMS AND GIRDERS

721.5.2.1.2 Beam and girder substitutions. Except as provided for in Section 721.5.2.2, structural steel beams in approved fire-resistance-rated assemblies shall be considered the minimum permissible size. Other beam or girder shapes shall be permitted to be substituted provided that the weight-to-heated-perimeter ratio (W/D) of the substitute beam is equal to or greater than that of the beam specified in the approved assembly.

721.5.2.2 Sprayed fire-resistant materials. The provisions in this section apply to structural steel beams and girders protected with sprayed fire-resistant materials. Larger or smaller beam and girder shapes shall be permitted to be substituted for beams specified in approved unrestrained or restrained fire-resistance-rated assemblies, provided that the thickness of the fire-resistant material is adjusted in accordance with the following expression:

$H2 = h1[(W_1 / D_1) + 0.60]/[(W_2 / D_2) + 0.60]$ **(Equation 7-17)**

where:

h = Thickness of sprayed fire-resistant material in inches.

W = Weight of the structural steel beam or girder in pounds per linear foot.

D = Heated perimeter of the structural steel beam in inches.

Subscript 1 refers to the beam and fire-resistant material thickness in the approved assembly.

Subscript 2 refers to the substitute beam or girder and the required thickness of fire-resistant material.

The fire resistance of structural steel beams and girders protected with intumescent or mastic fire-resistant coatings shall be determined on the basis of fire-resistance tests in accordance with Section 703.2.

TABLE 721.5.1(1)
W/D RATIOS FOR STEEL COLUMNS

STRUCTURAL SHAPE	CONTOUR PROFILE	BOX PROFILE	STRUCTURAL SHAPE	CONTOUR PROFILE	BOX PROFILE
W14 x 233	2.49	3.65	W10 x 112	1.78	2.57
x 211	2.28	3.35	x 100	1.61	2.33
x 193	2.10	3.09	x 88	1.43	2.08
x 176	1.93	2.85	x 77	1.26	1.85
x 159	1.75	2.60	x 68	1.13	1.66
x 145	1.61	2.39	x 60	1.00	1.48
x 132	1.52	2.25	x 54	0.91	1.34
x 120	1.39	2.06	x 49	0.83	1.23
x 109	1.27	1.88	x 45	0.87	1.24
x 99	1.16	1.72	x 39	0.76	1.09
x 90	1.06	1.58	x 33	0.65	0.93
x 82	1.20	1.68			
x 74	1.09	1.53	W8 x 67	1.34	1.94
x 68	1.01	1.41	x 58	1.18	1.71
x 61	0.91	1.28	x 48	0.99S	1.44

x 53	0.89	1.21	x 40	0.83	1.23
x 48	0.81	1.10	x 35	0.73	1.08
x 43	0.73	0.99	x 31	0.65	0.97
			x 28	0.67	0.96
W12 x 190	2.46	3.51	x 24	0.58	0.83
x 170	2.22	3.20	x 21	0.57	0.77
x 152	2.01	2.90	x 18	0.49	0.67
x 136	1.82	2.63			
x 120	1.62	2.36	W6 x 25	0.69	1.00
x 106	1.44	2.11	x 20	0.56	0.82
x 96	1.32	1.93	x 16	0.57	0.78
x 87	1.20	1.76	x 15	0.42	0.63
x 79	1.10	1.61	x 12	0.43	0.60
x 72	1.00	1.48	x 9	0.33	0.46
x 65	0.91	1.35			
x 58	0.91	1.31	W5 x 19	0.64	0.93
x 53	0.84	1.20	x 16	0.54	0.80
x 50	0.89	1.23			
x 45	0.81	1.12	W4 x 13	0.54	0.79
x 40	0.72	1.00			

For SI: 1 pound per linear foot per inch = 0.059 kg/m/mm.

TABLE 721.5.1(2)
PROPERTIES OF CONCRETE

PROPERTY	NORMAL-WEIGHT CONCRETE	STRUCTURAL LIGHTWEIGHT CONCRETE
Thermal conductivity (k_c)	0.95 Btu/hr ft ºF	0.35 Btu/hr ft ºF
Specific heat (c_c)	0.20 Btu/lb ºF	0.20 Btu/lb ºF
Density (P_c)	145 lb/ft^3	110 lb/ft^3
Equilibrium (free) moisture content (m) by volume	4%	5%

For SI: 1 inch = 25.4 mm, 1 foot = 304.8 mm, 1 lb/ft^3 = 16.0185 kg/m^3, Btu/hr ft ºF = 1.731 W/(m • K).

TABLE 721.5.1(3)
THERMAL CONDUCTIVITY OF CONCRETE OR CLAY MASONRY UNITS

DENSITY (d_m) OF UNITS (lb/ft^3)	THERMAL CONDUCTIVITY (K) OF UNITS (Btu/hr • ft • °F)
Concrete Masonry Units	

80	0.207
85	0.228
90	0.252
95	0.278
100	0.308
105	0.340
110	0.376
115	0.416
120	0.459
125	0.508
130	0.561
135	0.620
140	0.685
145	0.758
150	0.837
Clay Masonry Units	
120	1.25
130	2.25

For SI: 1 pound per cubic foot = 16.0185 kg/m^3, Btu per hour • foot • °F = 1.731 W/(m • K).

TABLE 721.5.1(4)
WEIGHT-TO-HEATED-PERIMETER RATIOS (W/D)
FOR TYPICAL WIDE FLANGE BEAM AND GIRDER SHAPES

STRUCTURAL SHAPE	CONTOUR PROFILE	BOX PROFILE	STRUCTURAL SHAPE	CONTOUR PROFILE	BOX PROFILE
W36 x 300	2.47	3.33	x 68	0.92	1.21
x 280	2.31	3.12	x 62	0.92	1.14
x 260	2.16	2.92	x 55	0.82	1.02
x 245	2.04	2.76			
x 230	1.92	2.61	W21 x 147	1.83	2.60
x 210	1.94	2.45	x 132	1.66	2.35
x 194	1.80	2.28	x 122	1.54	2.19
x 182	1.69	2.15	x 111	1.41	2.01
x 170	1.59	2.01	x 101	1.29	1.84
x 160	1.50	1.90	x 93	1.38	1.80
x 150	1.41	1.79	x 83	1.24	1.62

x 135	1.28	1.63	x 73	1.10	1.44
			x 68	1.03	1.35
W33 x 241	2.11	2.86	x 62	0.94	1.23
x 221	1.94	2.64	x 57	0.93	1.17
x 201	1.78	2.42	x 50	0.83	1.04
x 152	1.51	1.94	x 44	0.73	0.92
x 141	1.41	1.80			
x 130	1.31	1.67	W18 x 119	1.69	2.42
x 118	1.19	1.53	x 106	1.52	2.18
			x 97	1.39	2.01
W30 x 211	2.00	2.74	x 86	1.24	1.80
x 191	1.82	2.50	x 76	1.11	1.60
x 173	1.66	2.28	x 71	1.21	1.59
x 132	1.45	1.85	x 65	1.11	1.47
x 124	1.37	1.75	x 60	1.03	1.36
x 116	1.28	1.65	x 55	0.95	1.26
x 108	1.20	1.54	x 50	0.87	1.15
x 99	1.10	1.42	x 46	0.86	1.09
			x 40	0.75	0.96
W27 x 178	1.85	2.55	x 35	0.66	0.85
x 161	1.68	2.33			
x 146	1.53	2.12	W16 x 100	1.56	2.25
x 114	1.36	1.76	x 89	1.40	2.03
x 102	1.23	1.59	x 77	1.22	1.78
x 94	1.13	1.47	x 67	1.07	1.56
x 84	1.02	1.33	x 57	1.07	1.43
			x 50	0.94	1.26
			x 45	0.85	1.15
W24 x 162	1.85	2.57	x 40	0.76	1.03
x 146	1.68	2.34	x 36	0.69	0.93
x 131	1.52	2.12	x 31	0.65	0.83
x 117	1.36	1.91	x 26	0.55	0.70
x 104	1.22	1.71			
x 94	1.26	1.63	W14 x 132	1.83	3.00
x 84	1.13	1.47	x 120	1.67	2.75
x 76	1.03	1.34	x 109	1.53	2.52
x 99	1.39	2.31	x 30	0.79	1.12
x 90	1.27	2.11	x 26	0.69	0.98
x 82	1.41	2.12	x 22	0.59	0.84
x 74	1.28	1.93	x 19	0.59	0.78
x 68	1.19	1.78	x 17	0.54	0.70
x 61	1.07	1.61	x 15	0.48	0.63

x 53	1.03	1.48	x 12	0.38	0.51
x 48	0.94	1.35			
x 43	0.85	1.22	W8 x 67	1.61	2.55
x 38	0.79	1.09	x 58	1.41	2.26
x 34	0.71	0.98	x 48	1.18	1.91
x 30	0.63	0.87	x 40	1.00	1.63
x 26	0.61	0.79	x 35	0.88	1.44
x 22	0.52	0.68	x 31	0.79	1.29
			x 28	0.80	1.24
W12 x 87	1.44	2.34	x 24	0.69	1.07
x 79	1.32	2.14	x 21	0.66	0.96
x 72	1.20	1.97	x 18	0.57	0.84
x 65	1.09	1.79	x 15	0.54	0.74
x 58	1.08	1.69	x 13	0.47	0.65
x 53	0.99	1.55	x 10	0.37	0.51
x 50	1.04	1.54			
x 45	0.95	1.40	W6 x 25	0.82	1.33
x 40	0.85	1.25	x 20	0.67	1.09
x 35	0.79	1.11	x 16	0.66	0.96
x 30	0.69	0.96	x 15	0.51	0.83
x 26	0.60	0.84	x 12	0.51	0.75
x 22	0.61	0.77	x 9	0.39	0.57
x 19	0.53	0.67			
x 16	0.45	0.57	W5 x 19	0.76	1.24
x 14	0.40	0.50	x 16	0.65	1.07
W10 x 112	2.14	3.38	W4 x 13	0.65	1.05
x 100	1.93	3.07			
x 88	1.70	2.75			
77	1.52	2.45			
68	1.35	2.20			
60	1.20	1.97			
54	1.09	1.79			
49	0.99	1.64			
45	1.03	1.59			
39	0.94	1.40			
33	0.77	1.20			

For SI: Pounds per linear foot per inch = 0.059 kg/m/mm

.

TABLE 721.5.1(5)

FIRE RESISTANCE OF CONCRETE MASONRY PROTECTED STEEL COLUMNS

COLUMN SIZE	CONCRETE MASONRY DENSITY POUNDS PER CUBIC FOOT	MINIMUM REQUIRED EQUIVALENT THICKNESS FOR FIRE-RESISTANCE RATING OF CONCRETE MASONRY PROTECTION ASSEMBLY, T_e (inches)				COLUMN SIZE	CONCRETE MASONRY DENSITY POUNDS PER CUBIC FOOT	MINIMUM REQUIRED EQUIVALENT THICKNESS FOR FIRE-RESISTANCE RATING OF CONCRETE MASONRY PROTECTION ASSEMBLY, T_e (inches)			
		1-hour	2-hour	3-hour	4-hour			1-hour	2-hour	3-hour	4-hour
W14 x 82	80	0.74	1.61	2.36	3.04	W10 x 68	80	0.72	1.58	2.33	3.01
	100	0.89	1.85	2.67	3.40		100	0.87	1.83	2.65	3.38
	110	0.96	1.97	2.81	3.57		110	0.94	1.95	2.79	3.55
	120	1.03	2.08	2.95	3.73		120	1.01	2.06	2.94	3.72
W14 x 68	80	0.83	1.70	2.45	3.13	W10 x 54	80	0.88	1.76	2.53	3.21
	100	0.99	1.95	2.76	3.49		100	1.04	2.01	2.83	3.57
	110	1.06	2.06	2.91	3.66		110	1.11	2.12	2.98	3.73
	120	1.14	2.18	3.05	3.82		120	1.19	2.24	3.12	3.90
W14 x 53	80	0.91	1.81	2.58	3.27	W10 x 45	80	0.92	1.83	2.60	3.30
	100	1.07	2.05	2.88	3.62		100	1.08	2.07	2.90	3.64
	110	1.15	2.17	3.02	3.78		110	1.16	2.18	3.04	3.80
	120	1.22	2.28	3.16	3.94		120	1.23	2.29	3.18	3.96
W14 x 43	80	1.01	1.93	2.71	3.41	W10 x 33	80	1.06	2.00	2.79	3.49
	100	1.17	2.17	3.00	3.74		100	1.22	2.23	3.07	3.81
	110	1.25	2.28	3.14	3.90		110	1.30	2.34	3.20	3.96
	120	1.32	2.38	3.27	4.05		120	1.37	2.44	3.33	4.12
W12 x 72	80	0.81	1.66	2.41	3.09	W8 x 40	80	0.94	1.85	2.63	3.33
	100	0.91	1.88	2.70	3.43		100	1.10	2.10	2.93	3.67
	110	0.99	1.99	2.84	3.60		110	1.18	2.21	3.07	3.83
	120	1.06	2.10	2.98	3.76		120	1.25	2.32	3.20	3.99
W12 x 58	80	0.88	1.76	2.52	3.21	W8 x 31	80	1.06	2.00	2.78	3.49
	100	1.04	2.01	2.83	3.56		100	1.22	2.23	3.07	3.81
	110	1.11	2.12	2.97	3.73		110	1.29	2.33	3.20	3.97
	120	1.19	2.23	3.11	3.89		120	1.36	2.44	3.33	4.12
W12 x 50	80	0.91	1.81	2.58	3.27	W8 x 24	80	1.14	2.09	2.89	3.59
	100	1.07	2.05	2.88	3.62		100	1.29	2.31	3.16	3.90
	110	1.15	2.17	3.02	3.78		110	1.36	2.42	3.28	4.05
	120	1.22	2.28	3.16	3.94		120	1.43	2.52	3.41	4.20
W12 x 40	80	1.01	1.94	2.72	3.41	W8 x 18	80	1.22	2.20	3.01	3.72
	100	1.17	2.17	3.01	3.75		100	1.36	2.40	3.25	4.01

	110	1.25	2.28	3.14	3.90		110	1.42	2.50	3.37	4.14
	120	1.32	2.39	3.27	4.06		120	1.48	2.59	3.49	4.28
4 x 4 x ½ wall thickness	80	0.93	1.90	2.71	3.43	4 double extra strong 0.674 wall thickness	80	0.80	1.75	2.56	3.28
	100	1.08	2.13	2.99	3.76		100	0.95	1.99	2.85	3.62
	110	1.16	2.24	3.13	3.91		110	1.02	2.10	2.99	3.78
	120	1.22	2.34	3.26	4.06		120	1.09	2.20	3.12	3.93
4 x 4 x 3/8 wall thickness	80	1.05	2.03	2.84	3.57	4 extra strong 0.337 wall thickness	80	1.12	2.11	2.93	3.65
	100	1.20	2.25	3.11	3.88		100	1.26	2.32	3.19	3.95
	110	1.27	2.35	3.24	4.02		110	1.33	2.42	3.31	4.09
	120	1.34	2.45	3.37	4.17		120	1.40	2.52	3.43	4.23
4 x 4 x ¼ wall thickness	80	1.21	2.20	3.01	3.73	4 standard 0.237 wall thickness	80	1.26	2.25	3.07	3.79
	100	1.35	2.40	3.26	4.02		100	1.40	2.45	3.31	4.07
	110	1.41	2.50	3.38	4.16		110	1.46	2.55	3.43	4.21
	120	1.48	2.59	3.50	4.30		120	1.53	2.64	3.54	4.34
6 x 6 x ½ wall thickness	80	0.82	1.75	2.54	3.25	5 double extra strong 0.750 wall thickness	80	0.70	1.61	2.40	3.12
	100	0.98	1.99	2.84	3.59		100	0.85	1.86	2.71	3.47
	110	1.05	2.10	2.98	3.75		110	0.91	1.97	2.85	3.63
	120	1.12	2.21	3.11	3.91		120	0.98	2.02	2.99	3.79
6 x 6 x 3/8 wall thickness	80	0.96	1.91	2.71	3.42	5 extra strong 0.375 wall thickness	80	1.04	2.01	2.83	3.54
	100	1.12	2.14	3.00	3.75		100	1.19	2.23	3.09	3.85
	110	1.19	2.25	3.13	3.90		110	1.26	2.34	3.22	4.00
	120	1.26	2.35	3.26	4.05		120	1.32	2.44	3.34	4.14
6 x 6 x ¼ wall thickness	80	1.14	2.11	2.92	3.63	5 standard 0.258 wall thickness	80	1.20	2.19	3.00	3.72
	100	1.29	2.32	3.18	3.93		100	1.34	2.39	3.25	4.00
	110	1.36	2.43	3.30	4.08		110	1.41	2.49	3.37	4.14
	120	1.42	2.52	3.43	4.22		120	1.47	2.58	3.49	4.28
8 x 8 x ½ wall thickness	80	0.77	1.66	2.44	3.13	6 double extra strong 0.864 wall thickness	80	0.59	1.46	2.23	2.92
	100	0.92	1.91	2.75	3.49		100	0.73	1.71	2.54	3.29
	110	1.00	2.02	2.89	3.66		110	0.80	1.82	2.69	3.47
	120	1.07	2.14	3.03	3.82		120	0.86	1.93	2.83	3.63
8 x 8 x 3/8 wall thickness	80	0.91	1.84	2.63	3.33	6 extra strong 0.432 wall thickness	80	0.94	1.90	2.70	3.42
	100	1.07	2.08	2.92	3.67		100	1.10	2.13	2.98	3.74
	110	1.14	2.19	3.06	3.83		110	1.17	2.23	3.11	3.89
	120	1.21	2.29	3.19	3.98		120	1.24	2.34	3.24	4.04
8 x 8 x ¼ wall thickness	80	1.10	2.06	2.86	3.57	6 standard 0.280 wall thickness	80	1.14	2.12	2.93	3.64
	100	1.25	2.28	3.13	3.87		100	1.29	2.33	3.19	3.94
	110	1.32	2.38	3.25	4.02		110	1.36	2.43	3.31	4.08

	120	1.39	2.48	3.38	4.17		120	1.42	2.53	3.43	4.22

For SI: 1 inch = 25.4 mm, 1 pound per cubic feet = 16.02 kg/m^3.

Note: Tabulated values assume 1-inch air gap between masonry and steel section.

TABLE 721.5.1(6)
FIRE RESISTANCE OF CLAY MASONRY PROTECTED STEEL COLUMNS

COLUMN SIZE	CLAY MASONRY DENSITY, POUNDS PER CUBIC FOOT	MINIMUM REQUIRED EQUIVALENT THICKNESS FOR FIRE-RESISTANCE RATING OF CLAY MASONRY PROTECTION ASSEMBLY, T_e (inches)				COLUMN SIZE	CLAY MASONRY DENSITY, POUNDS PER CUBIC FOOT	MINIMUM REQUIRED EQUIVALENT THICKNESS FOR FIRE-RESISTANCE RATING OF CLAY MASONRY PROTECTION ASSEMBLY, T_e (inches)			
		1-hour	2-hour	3-hour	4-hour			1-hour	2-hour	3-hour	4-hour
W14 x 82	120	1.23	2.42	3.41	4.29	W10 x 68	120	1.27	2.46	3.26	4.35
	130	1.40	2.70	3.78	4.74		130	1.44	2.75	3.83	4.80
W14 x 68	120	1.34	2.54	3.54	4.43	W10 x 54	120	1.40	2.61	3.62	4.51
	130	1.51	2.82	3.91	4.87		130	1.58	2.89	3.98	4.95
W14 x 53	120	1.43	2.65	3.65	4.54	W10 x 45	120	1.44	2.66	3.67	4.57
	130	1.61	2.93	4.02	4.98		130	1.62	2.95	4.04	5.01
W14 x 43	120	1.54	2.76	3.77	4.66	W10 x 33	120	1.59	2.82	3.84	4.73
	130	1.72	3.04	4.13	5.09		130	1.77	3.10	4.20	5.13
W12 x 72	120	1.32	2.52	3.51	4.40	W8 x 40	120	1.47	2.70	3.71	4.61
	130	1.50	2.80	3.88	4.84		130	1.65	2.98	4.08	5.04
W12 x 58	120	1.40	2.61	3.61	4.50	W8 x 31	120	1.59	2.82	3.84	4.73
	130	1.57	2.89	3.98	4.94		130	1.77	3.10	4.20	5.17
W12 x 50	120	1.43	2.65	3.66	4.55	W8 x 24	120	1.66	2.90	3.92	4.82
	130	1.61	2.93	4.02	4.99		130	1.84	3.18	4.28	5.25
W12 x 40	120	1.54	2.77	3.78	4.67	W8 x 18	120	1.75	3.00	4.01	4.91
	130	1.72	3.05	4.14	5.10		130	1.93	3.27	4.37	5.34
	STEEL TUBING						STEEL PIPE				
NOMINAL TUBE SIZE (inches)	CLAY MASONRY DENSITY, POUNDS PER CUBIC FOOT	MINIMUM REQUIRED EQUIVALENT THICKNESS FOR FIRE-RESISTANCE RATING OF CLAY MASONRY PROTECTION ASSEMBLY, T_e (inches)				NOMINAL PIPE SIZE (inches)	CLAY MASONRY DENSITY, POUNDS PER CUBIC FOOT	MINIMUM REQUIRED EQUIVALENT THICKNESS FOR FIRE-RESISTANCE RATING OF CLAY MASONRY PROTECTION ASSEMBLY, T_e (inches)			
		1-hour	2-hour	3-hour	4-hour			1-hour	2-hour	3-hour	4-hour
4 x 4 x ½ wall thickness	120	1.44	2.72	3.76	4.68	4 double extra strong 0.674 wall thickness	120	1.26	2.55	3.60	4.52
	130	1.62	3.00	4.12	5.11		130	1.42	2.82	3.96	4.95
4 x 4 x 3/8 wall thickness	120	1.56	2.84	3.88	4.78	4 extra strong 0.337 wall thickness	120	1.60	2.89	3.92	4.83
	130	1.74	3.12	4.23	5.21		130	1.77	3.16	4.28	5.25
4 x 4 x ¼	120	1.72	2.99	4.02	4.92	4 standard	120	1.74	3.02	4.05	4.95

wall thickness	130	1.89	3.26	4.37	5.34	0.237 wall thickness	130	1.92	3.29	4.40	5.37
6 x 6 x ½ wall thickness	120	1.33	2.58	3.62	4.52	5 double extra strong 0.750 wall thickness	120	1.17	2.44	3.48	4.40
	130	1.50	2.86	3.98	4.96		130	1.33	2.72	3.84	4.83
6 x 6 x 3/8 wall thickness	120	1.48	2.74	3.76	4.67	5 extra strong 0.375 wall thickness	120	1.55	2.82	3.85	4.76
	130	1.65	3.01	4.13	5.10		130	1.72	3.09	4.21	5.18
6 x 6 x ¼ wall thickness	120	1.66	2.91	3.94	4.84	5 standard 0.258 wall thickness	120	1.71	2.97	4.00	4.90
	130	1.83	3.19	4.30	5.27		130	1.88	3.24	4.35	5.32
8 x 8 x ½ wall thickness	120	1.27	2.50	3.52	4.42	6 double extra strong 0.864 wall thickness	120	1.04	2.28	3.32	4.23
	130	1.44	2.78	3.89	4.86		130	1.19	2.60	3.68	4.67
8 x 8 x 3/8 wall thickness	120	1.43	2.67	3.69	4.59	6 extra strong 0.432 wall thickness	120	1.45	2.71	3.75	4.65
	130	1.60	2.95	4.05	5.02		130	1.62	2.99	4.10	5.08
8 x 8 x ¼ wall thickness	120	1.62	2.87	3.89	4.78	6 standard 0.280 wall thickness	120	1.65	2.91	3.94	4.84
	130	1.79	3.14	4.24	5.21		130	1.82	3.19	4.30	5.27

TABLE 721.5.1(7)
MINIMUM COVER (inch) FOR STEEL COLUMNS ENCASED IN NORMAL-WEIGHT CONCRETE[a]
[FIGURE 721.5.1(6)(c)]

STRUCTURAL SHAPE	FIRE-RESISTANCE RATING (hours)				
	1	1 ½	2	3	4
W14 x 233	1	1	1	1 ½	2
x 176					2 ½
x 132				2	
x 90			1 ½		
x 61					3
x 48		1 ½		2 ½	
x 43					
W12 x 152	1	1	1	2	2 ½
x 96					
x 65		1 ½	1 ½		3
x 50				2 ½	
x 40					
W10 x 88	1			2	3

<table>
<tr><td>x 49</td><td rowspan="4">1</td><td rowspan="4">1 ½</td><td rowspan="3">1 ½</td><td rowspan="4">2 ½</td><td></td></tr>
<tr><td>x 45</td><td></td></tr>
<tr><td>x 39</td><td rowspan="2">3 ½</td></tr>
<tr><td>x 33</td><td>2</td></tr>
<tr><td>W8 x 67</td><td rowspan="6">1</td><td>1</td><td rowspan="3">1 ½</td><td rowspan="3"></td><td>3</td></tr>
<tr><td>x 58</td><td></td></tr>
<tr><td>x 48</td><td rowspan="2">1 ½</td><td>2 ½</td><td rowspan="3">3 ½</td></tr>
<tr><td>x 31</td><td rowspan="3">2</td><td rowspan="3"></td></tr>
<tr><td>x 21</td><td></td></tr>
<tr><td>x 18</td><td>3</td><td>4</td></tr>
<tr><td>W6 x 25</td><td rowspan="3"></td><td>1 ½</td><td>2</td><td rowspan="4">3</td><td>3 ½</td></tr>
<tr><td>x 20</td><td rowspan="4">2</td><td rowspan="4"></td><td rowspan="4">4</td></tr>
<tr><td>x 16</td><td>1</td></tr>
<tr><td>x 15</td><td rowspan="2"></td></tr>
<tr><td>x 9</td><td>1 ½</td><td>2 ½</td><td>3 ½</td></tr>
</table>

For SI: 1 inch = 25.4 mm.

a. The tabulated thicknesses are based upon the assumed properties of normal-weight concrete given in Table 721.5.1(2).

TABLE 721.5.1(8)
MINIMUM COVER (inch) FOR STEEL COLUMNS ENCASED IN STRUCTURAL LIGHTWEIGHT CONCRETE[a] [FIGURE 721.5.1(6)(c)]

<table>
<tr><th rowspan="2">STRUCTURAL SHAPE</th><th colspan="5">FIRE-RESISTANCE RATING (HOURS)</th></tr>
<tr><th>1</th><th>1 ½</th><th>2</th><th>3</th><th>4</th></tr>
<tr><td>W14 x 233</td><td rowspan="5">1</td><td rowspan="5">1</td><td rowspan="4">1</td><td>1</td><td rowspan="2">1 ½</td></tr>
<tr><td>x 193</td><td rowspan="3">1 ½</td></tr>
<tr><td>x 74</td><td>2</td></tr>
<tr><td>x 61</td><td rowspan="2"></td></tr>
<tr><td>x 43</td><td>1 ½</td><td>2</td><td>2 ½</td></tr>
<tr><td>W12 x 65</td><td rowspan="3">1</td><td rowspan="3">1</td><td rowspan="2"></td><td>1 ½</td><td>2</td></tr>
<tr><td>x 53</td><td>1</td><td rowspan="2"></td><td rowspan="2"></td></tr>
<tr><td>x 40</td><td>1 ½</td><td>2</td><td>2 ½</td></tr>
<tr><td>W10 x 112</td><td rowspan="4">1</td><td rowspan="4">1</td><td rowspan="3">1</td><td rowspan="2">1 ½</td><td>2</td></tr>
<tr><td>x 88</td><td rowspan="3">2 ½</td></tr>
<tr><td>x 60</td><td rowspan="2">2</td></tr>
<tr><td>x 33</td><td>1 ½</td></tr>
</table>

<table>
<tr><td>W8 x 35</td><td rowspan="4">1</td><td rowspan="3">1</td><td rowspan="4">1 ½</td><td rowspan="2"></td><td>2 ½</td></tr>
<tr><td>x 28</td><td rowspan="3">3</td></tr>
<tr><td>x 24</td><td rowspan="2">2</td></tr>
<tr><td>x 18</td><td>1 ½</td><td>2 ½</td></tr>
</table>

For SI: 1 inch = 25.4 mm.

a. The tabulated thicknesses are based upon the assumed properties of structural lightweight concrete given in Table 721.5.1(2).

TABLE 721.5.1(9)
MINIMUM COVER (inch) FOR STEEL COLUMNS IN NORMAL-WEIGHT PRECAST COVERS[a]
[FIGURE 721.5.1(6)(a)]

<table>
<tr><th rowspan="2">STRUCTURAL SHAPE</th><th colspan="5">FIRE-RESISTANCE RATING (hours)</th></tr>
<tr><th>1</th><th>1 1/2</th><th>2</th><th>3</th><th>4</th></tr>
<tr><td>W14 x 233</td><td rowspan="8">1 ½</td><td rowspan="5"></td><td rowspan="3"></td><td rowspan="3">2 ½</td><td>3</td></tr>
<tr><td>x 211</td><td>1 ½</td><td rowspan="5">3 ½</td></tr>
<tr><td>x 176</td><td rowspan="2">2</td></tr>
<tr><td>x 145</td><td>1 ½</td><td rowspan="4">3</td></tr>
<tr><td>x 109</td><td rowspan="4"></td><td rowspan="4"></td></tr>
<tr><td>x 99</td><td rowspan="3"></td></tr>
<tr><td>x 61</td><td rowspan="2">4</td></tr>
<tr><td>x 43</td><td>2</td><td>2 ½</td><td>3 ½</td><td>4 ½</td></tr>
<tr><td>W12 x 190</td><td rowspan="7">1 ½</td><td rowspan="4">1 ½</td><td>1 ½</td><td rowspan="2">2 ½</td><td rowspan="2">3 ½</td></tr>
<tr><td>x 152</td><td rowspan="3">2</td></tr>
<tr><td>x 120</td><td rowspan="3">3</td><td rowspan="4">4</td></tr>
<tr><td>x 96</td></tr>
<tr><td>x 87</td><td rowspan="3"></td><td rowspan="3"></td><td rowspan="3"></td></tr>
<tr><td>x 58</td><td rowspan="2">4 ½</td></tr>
<tr><td>x 40</td><td>2</td><td>2 ½</td><td>3 ½</td></tr>
<tr><td>W10 x 112</td><td rowspan="5">1 ½</td><td rowspan="3"></td><td rowspan="3"></td><td rowspan="5"></td><td>3 ½</td></tr>
<tr><td>x 88</td><td>1 ½</td><td>2</td><td rowspan="4">4</td></tr>
<tr><td>x 77</td><td rowspan="3">2</td><td rowspan="3">2 ½</td><td>3</td></tr>
<tr><td>x 54</td><td>3 ½</td></tr>
<tr><td>x 33</td><td>4 ½</td></tr>
<tr><td>W8 x 67</td><td rowspan="3">1 ½</td><td>1 ½</td><td>2</td><td>3</td><td rowspan="3">4</td></tr>
<tr><td>x 58</td><td rowspan="2">2</td><td rowspan="2">2 ½</td><td rowspan="2">3 ½</td></tr>
<tr><td>x 48</td></tr>
</table>

<table>
<tr><td>x 28</td><td rowspan="3"></td><td></td><td></td><td rowspan="2"></td><td rowspan="3">4 ½</td></tr>
<tr><td>x 21</td><td rowspan="2">2 ½</td><td rowspan="2">3</td></tr>
<tr><td>x 18</td><td>4</td></tr>
<tr><td>W6 x 25</td><td rowspan="3">1 ½</td><td>2</td><td>2 ½</td><td rowspan="2">3 ½</td><td rowspan="4">4 ½</td></tr>
<tr><td>x 20</td><td rowspan="4">2 ½</td><td rowspan="4">3</td></tr>
<tr><td>x 16</td><td rowspan="3">4</td></tr>
<tr><td>x 12</td><td>2</td></tr>
<tr><td>x 9</td><td></td><td>5</td></tr>
</table>

For SI: 1 inch = 25.4 mm.

a. The tabulated thicknesses are based upon the assumed properties of normal-weight concrete given in Table 721.5.1(2).

TABLE 721.5.1(10)
MINIMUM COVER (inch) FOR STEEL COLUMNS IN STRUCTURAL LIGHTWEIGHT PRECAST COVERS[a] [FIGURE 721.5.1(6)(a)]

<table>
<tr><th rowspan="2">STRUCTURAL SHAPE</th><th colspan="5">FIRE-RESISTANCE RATING (hours)</th></tr>
<tr><th>1</th><th>1 ½</th><th>2</th><th>3</th><th>4</th></tr>
<tr><td>W14 x 233</td><td rowspan="8">1 ½</td><td rowspan="8">1 ½</td><td rowspan="5">2 ½</td><td rowspan="2"></td><td>2 ½</td></tr>
<tr><td>x 176</td><td>2</td><td rowspan="5">3</td></tr>
<tr><td>x 145</td><td rowspan="4">2 ½</td></tr>
<tr><td>x 132</td></tr>
<tr><td>x 109</td></tr>
<tr><td>x 99</td><td rowspan="3">2</td><td rowspan="3">2 ½</td></tr>
<tr><td>x 68</td><td rowspan="2"></td></tr>
<tr><td>x 43</td><td>3</td><td>3 ½</td></tr>
<tr><td>W12 x 190</td><td rowspan="8">1 ½</td><td rowspan="8">1 ½</td><td rowspan="6">1 ½</td><td rowspan="3">2</td><td>2 ½</td></tr>
<tr><td>x 152</td><td rowspan="2">3</td></tr>
<tr><td>x 136</td></tr>
<tr><td>x 106</td><td rowspan="4">2 ½</td><td rowspan="4"></td></tr>
<tr><td>x 96</td></tr>
<tr><td>x 87</td></tr>
<tr><td>x 65</td><td rowspan="3">2</td></tr>
<tr><td>x 40</td><td>3</td><td>3 ½</td></tr>
<tr><td>W10 x 112</td><td rowspan="3"></td><td rowspan="3"></td><td rowspan="3">1 ½</td><td>2</td><td rowspan="3">3</td></tr>
<tr><td>x 100</td><td rowspan="2"></td></tr>
<tr><td>x 88</td></tr>
</table>

<table>
<tr><td>x 77</td><td rowspan="4">1 ½</td><td rowspan="3">1 ½</td><td rowspan="4">2</td><td>2 ½</td><td rowspan="4">3 ½</td></tr>
<tr><td>x 60</td><td rowspan="2">3</td></tr>
<tr><td>x 39</td></tr>
<tr><td>x 33</td><td>2</td></tr>
<tr><td>W8 x 67</td><td rowspan="5">1 ½</td><td rowspan="3">1 ½</td><td>1 ½</td><td>2 ½</td><td>3</td></tr>
<tr><td>x 48</td><td rowspan="3">2</td><td rowspan="4">3</td><td rowspan="3">3 ½</td></tr>
<tr><td>x 35</td></tr>
<tr><td>x 28</td><td rowspan="2">2</td></tr>
<tr><td>x 18</td><td>2 ½</td><td>4</td></tr>
<tr><td>W6 x 25</td><td rowspan="3">1 ½</td><td rowspan="3">2</td><td>2</td><td rowspan="2">3</td><td>3 ½</td></tr>
<tr><td>x 15</td><td rowspan="2">2 ½</td><td rowspan="2">4</td></tr>
<tr><td>x 9</td><td>3 ½</td></tr>
</table>

For SI: 1 inch = 25.4 mm.

a. The tabulated thicknesses are based upon the assumed properties of structural lightweight concrete given in Table 721.5.1(2).

721.5.2.2.1 Minimum thickness. The use of Equation 7-17 is subject to the following conditions:

1. The weight-to-heated-perimeter ratio for the substitute beam or girder (*W2/D2*) shall not be less than 0.37.

2. The thickness of fire protection materials calculated for the substitute beam or girder (*T1*) shall not be less than $^{3}/_{8}$ inch (9.5 mm).

3. The unrestrained or restrained beam rating shall not be less than 1 hour.

4. When used to adjust the material thickness for a restrained beam, the use of this procedure is limited to steel sections classified as compact in accordance with the AISC *Specification for Structural Steel Buildings*, (AISC 360-05).

721.5.2.3 Structural steel trusses. The fire resistance of structural steel trusses protected with fire-resistant materials sprayed to each of the individual truss elements shall be permitted to be determined in accordance with this section. The thickness of the fire-resistant material shall be determined in accordance with Section 721.5.1.3. The weight-to-heated-perimeter ratio (*W/D*) of truss elements that can be simultaneously

exposed to fire on all sides shall be determined on the same basis as columns, as specified in Section 721.5.1.1. The weight-to-heated-perimeter ratio (*W/D*) of truss elements that directly support floor or roof assembly shall be determined on the same basis as beams and girders, as specified in Section 721.5.2.1.

The fire resistance of structural steel trusses protected with intumescent or mastic fire-resistant coatings shall be determined on the basis of fire-resistance tests in accordance with Section 703.2.

721.6 Wood assemblies. The provisions of this section contain procedures by which the fire-resistance ratings of wood assemblies are established by calculations.

721.6.1 General. This section contains procedures for calculating the fire-resistance ratings of walls, floor/ceiling and roof/ceiling assemblies based in part on the standard method of testing referenced in Section 703.2.

721.6.1.1 Maximum fire-resistance rating. Fire resistance ratings calculated for assemblies using the methods in Section 721.6 shall be limited to a maximum of 1 hour.

721.6.1.2 Dissimilar membranes. Where dissimilar membranes are used on a wall assembly, the calculation shall be made from the least fire-resistant (weaker) side.

721.6.2 Walls, floors and roofs. These procedures apply to both load-bearing and nonload-bearing assemblies.

721.6.2.1 Fire-resistance rating of wood frame assemblies. The fire-resistance rating of a wood frame assembly is equal to the sum of the time assigned to the membrane on the fire-exposed side, the time assigned to the framing members and the time assigned for additional contribution by other protective measures such as insulation. The membrane on the unexposed side shall not be included in determining the fire resistance of the assembly.

721.6.2.2 Time assigned to membranes. Table 721.6.2(1) indicates the time assigned to membranes on the fire-exposed side.

721.6.2.3 Exterior walls. For an exterior wall with a fire separation distance greater than 5 feet (1524 mm), the wall is assigned a rating dependent on the interior membrane and the framing as described in Tables 721.6.2(1) and 721.6.2(2). The membrane on the outside of the nonfire-exposed side of exterior walls with a fire separation distance greater than 5 feet (1524 mm) may consist of sheathing, sheathing paper and siding as described in Table 721.6.2(3).

TABLE 721.6.2(1)
TIME ASSIGNED TO WALLBOARD MEMBRANES[a, b, c, d]

DESCRIPTION OF FINISH	TIME[e] (minutes)
$^{3}/_{8}$-inch wood structural panel bonded with exterior glue	5
$^{15}/_{32}$-inch wood structural panel bonded with exterior glue	10
$^{19}/_{32}$-inch wood structural panel bonded with exterior glue	15
$^{3}/_{8}$-inch gypsum wallboard	10
½-inch gypsum wallboard	15
$^{3}/_{8}$-inch gypsum wallboard	30
½-inch Type X gypsum wallboard	25
$^{5}/_{8}$-inch Type X gypsum wallboard	40
Double $^{3}/_{8}$-inch gypsum wallboard	25
½-inch + $^{3}/_{8}$-inch gypsum wallboard	35
Double ½-inch gypsum wallboard	40

For SI: 1 inch = 25.4 mm.

a. These values apply only when membranes are installed on framing members which are spaced 16 inches o.c.
b. Gypsum wallboard installed over framing or furring shall be installed so that all edges are supported, except $^{5}/_{8}$-inch Type X gypsum wallboard shall be permitted to be installed horizontally with the horizontal joints staggered 24 inches each side and unsupported but finished.
c. On wood frame floor/ceiling or roof/ceiling assemblies, gypsum board shall be installed with the long dimension perpendicular to framing members and shall have all joints finished.
d. The membrane on the unexposed side shall not be included in determining the fire resistance of the assembly. When dissimilar membranes are used on a wall assembly, the calculation shall be made from the least fire-resistant (weaker) side.
e. The time assigned is not a finished rating.

721.6.2.4 Floors and roofs. In the case of a floor or roof, the standard test provides only for testing for fire exposure from below. Except as noted in Section 703.3, Item 5, floor or roof assemblies of wood framing shall have an upper membrane consisting of a subfloor and finished floor conforming

to Table 721.6.2(4) or any other membrane that has a contribution to fire resistance of at least 15 minutes in Table 721.6.2(1).

TABLE 721.6.2(2)
TIME ASSIGNED FOR CONTRIBUTION OF WOOD FRAME [a, b, c]

DESCRIPTION	TIME ASSIGNED TO FRAME (minutes)
Wood studs 16 inches o.c.	20
Wood floor and roof joists 16 inches o.c.	10

For SI: 1 inch = 25.4 mm.
a. This table does not apply to studs or joists spaced more than 16 inches o.c.
b. All studs shall be nominal 2 × 4 and all joists shall have a nominal thickness of at least 2 inches.
c. Allowable spans for joists shall be determined in accordance with Sections 2308.8, 2308.10.2 and 2308.10.3.

TABLE 721.6.2(3)
MEMBRANE[a] ON EXTERIOR FACE OF WOOD STUD WALLS

SHEATHING	PAPER	EXTERIOR FINISH
$^5/_8$-inch T & G lumber $^5/_{16}$-inch exterior glue wood structural panel ½-inch gypsum wallboard $^5/_8$-inch gypsum wallboard ½-inch fiberboard	Sheathing paper	Lumber siding Wood shingles and shakes ¼-inch wood structural panels—exterior type ¼-inch hardboard Metal siding Stucco on metal lath Masonry veneer Vinyl siding
None	—	$^3/_8$-inch exterior-grade wood structural panels

For SI: 1 pound/cubic foot = 16.0185 kg/m^2.
a. Any combination of sheathing, paper and exterior finish is permitted.

TABLE 721.6.2(4)
FLOORING OR ROOFING OVER WOOD FRAMING[a]

ASSEMBLY	STRUCTURAL MEMBERS	SUBFLOOR OR ROOF DECK	FINISHED FLOORING OR ROOFING
Floor	Wood	$^{15}/_{32}$-inch wood structural panels or $^{11}/_{16}$ inch T & G softwood	Hardwood or softwood flooring on building paper resilient flooring, parquet floor felted-synthetic fiber floor coverings, carpeting, or ceramic tile on $^3/_8$-inch-thick panel-type underlay Ceramic tile on 1¼-inch mortar bed
Roof	Wood	$^{15}/_{32}$-inch wood structural panels or $^{11}/_{16}$ inch T & G softwood	Finished roofing material with or without insulation

For SI: 1 inch = 25.4 mm.
a. This table applies only to wood joist construction. It is not applicable to wood truss construction.

TABLE 721.6.2(5)
TIME ASSIGNED FOR ADDITIONAL PROTECTION

DESCRIPTION OF ADDITIONAL PROTECTION	RESISTANCE (minutes)
Add to the fire-resistance rating of wood stud walls if the spaces between the studs are completely filled with glass fiber mineral wool batts weighing not less than 2 pounds per cubic foot (0.6 pound per square foot of wall surface) or rockwool or slag material wool batts weighing not less than 3.3 pounds per cubic foot (1 pound per square foot of wall surface), or cellulose insulation having a nominal density not less than 2.6 pounds per cubic foot.	15

For SI: 1 pound/cubic foot = 16.0185 kg/m^3.

721.6.2.5 Additional protection. Table 721.6.2(5) indicates the time increments to be added to the fire resistance where glass fiber, rockwool, slag mineral wool or cellulose insulation is incorporated in the assembly.

721.6.2.6 Fastening. Fastening of wood frame assemblies and the fastening of membranes to the wood framing members shall be done in accordance with Chapter 23.

721.6.3 Design of fire-resistant exposed wood members. The fire-resistance rating, in minutes, of timber beams and columns with a minimum nominal dimension of 6 inches (152 mm) is equal to:

Beams: $2.54Zb\,[4 - 2(b/d)]$ for beams which may be exposed to fire on four sides.

(Equation 7-18)

$2.54Zb\,[4 - (b/d)]$ for beams which may be exposed to fire on three sides.

(Equation 7-19)

Columns: $2.54Zd\,[3 - (d/b)]$ for columns which may be exposed to fire on four sides

(Equation 7-20)

$2.54Zd\,[3 - (d/2b)]$ for columns which may be exposed to fire on three sides.

(Equation 7-21)

where:

b= The breadth (width) of a beam or larger side of a column before exposure to fire (inches).

d = The depth of a beam or smaller side of a column before exposure to fire (inches).

Z = Load factor, based on Figure 721.6.3(1).

721.6.3.1 Equation 7-21. Equation 7-21 applies only where the unexposed face represents the smaller side of the column. If a column is recessed into a wall, its full dimension shall be used for the purpose of these calculations.

721.6.3.2 Allowable loads. Allowable loads on beams and columns are determined using design values given in AF&PA NDS.

721.6.3.3 Fastener protection. Where minimum 1-hour fire resistance is required, connectors and fasteners shall be protected from fire exposure by 1½ inches (38 mm) of wood, or other approved covering or coating for a 1-hour rating. Typical details for commonly used fasteners and connectors are shown in AITC Technical Note 7.

721.6.3.4 Minimum size. Wood members are limited to dimensions of 6 inches (152 mm) nominal or greater. Glued-laminated timber beams utilize standard laminating combinations except that a core lamination is removed. The tension zone is moved inward and the equivalent of an extra nominal 2-inch-thick (51 mm) outer tension lamination is added.

FIGURE 721.6.3(1)
LOAD FIGURE

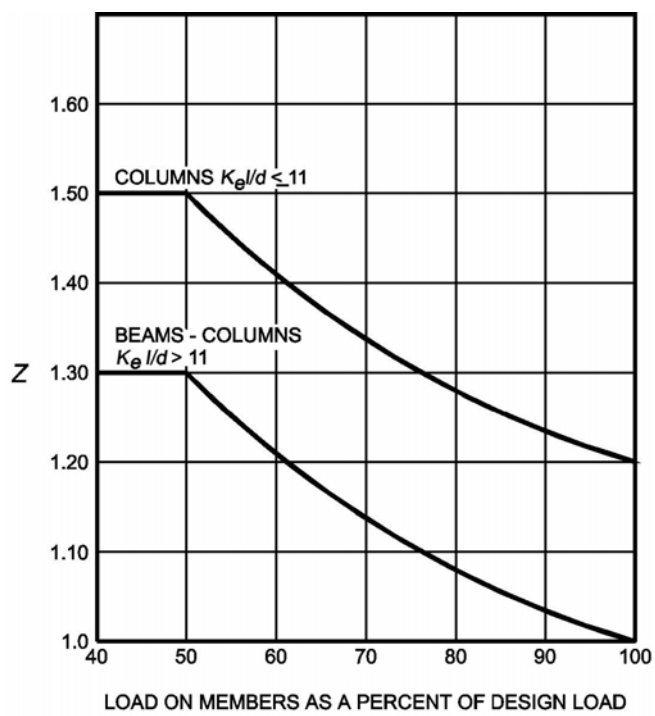

BUCKLING MODES	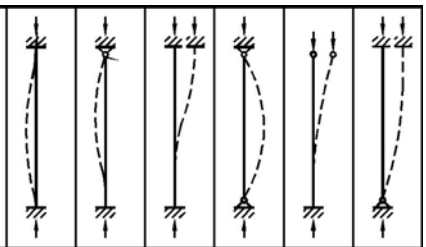					
THEORETICAL K_e VALUE	0.5	0.7	1.0	1.0	2.0	2.0
RECOMMENDED DESIGN K_e WHEN IDEAL CONDITIONS APPROXIMATED	0.65	0.80	1.2	1.0	2.10	2.4
END CONDITION CODE	ROTATION FIXED, TRANSLATION FIXED ROTATION FREE, TRANSLATION FIXED ROTATION FIXED, TRANSLATION FREE ROTATION FREE, TRANSLATION FREE					

K_e = The effective length factor as noted in Figure 721.6.3(2).
l = The unsupported length of columns (inches).

FIGURE 721.6.3(2)
EFFECTIVE LENGTH FACTORS