Department of Commerce
Division of Industrial Compliance
John R. Kasich, Governor
Andre T. Porter, Director

List of BBS Proposed Ohio Residential Code of Ohio Rule Changes– Spring 2015
2013 RESIDENTIALCODE OF OHIO PROPOSED CHANGES

Ohio Administrative Code Rule Number	RCO Section	Reason for proposed change
4101:8-1-01	101.2	To add language including electrical equipment associated with bodies of water
	101.2, Exceptions #11	To add an exception for private water systems
	102.10	To add above-ground storage tanks as work exempt from approval
	104.2.1.3.1	To add an incidental inspection program and requirements
	104.2.1.3.1.1	To add incidental inspection program inspection procedures
	106.1.2 (#3)	To remove language regarding the installer of fire protection systems
	106.1.3 (#9)	To add accessibility provisions to plan submittal
	106.1.3 (#10)	Renumbered
	108.2.11	To clarify that notification should be made to residential building official
	108.2.14	To add authorization to establish an incidental inspection program
4101:8-2-01	Above ground storage tank	To add definition
	Building service equipment	To add definition
	Engine mounted tank	To add definition
	Fuel tank	To add definition
4101:8-3-01	302.1, exceptions (#6)	To add detached garages with an exterior wall located ≥3 ft from a lot line
	314.1, and exception	To change section title and specify the technology requirements, adding an exception for systems meeting 314.2
	314.2, exception	To add clarification regarding separate alarms and systems
	320.1	To add Type C (visitable) to accessibility scope

4101:8-5-01	502.1.1	To update a cross-reference
	502.2.1	To update a cross-reference
	502.2.2.3	To remove deck lateral load connection language
	Figure 502.2.2.3	To remove the figure
	506.2.3	To add clarification to the exceptions for vapor retarder requirements
4101:8-19-01	1905	To add a section for Engine and gas-turbine powered equipment and appliances
	1905.1	To add general provisions
	1905.2	To add engine-driven equipment and appliances requirements
	1905.2.1	To add Fuel tanks connected to engine-driven building services equipment requirements
	1905.2.1.1	To add Engine-mounted tanks requirements
	1905.2.1.2	To add Other fuel tanks requirements
	1905.2.2	To add gaseous fuel supply requirements
	1905.3	To add Engine-driven stationary generators requirements
4101:8-22-01	2200.1	To add a scope to the Special piping and storage systems chapter
	2201.2	To add diesel oil to the scope of above-ground tanks requirements
	2201.2, exceptions (#1, 2)	To add an exception and specify a reference standard
	2201.3.1	To add regulated underground storage of fuel oil requirements
4101:8-24-01	2411.1.1	To add CSST bonding requirements
	2411.1.1.1	To add point of connection requirements for CSST
	2411.1.1.2	To add size and material of jumper bonding requirements for CSST
	2411.1.1.3	To add bonding jumper length requirements for CSST
	2411.1.1.4	To add bonding connections requirements for CSST
	2411.1.1.5	To add connection devices requirements for CSST
	2415.1	To add installation of materials requirements for piping system

		installation
	2415.1.1	To add CSST installation requirements
	2415.1.2	Renumbered
	2422.1.3	To update language from ‘air conditioners’ to ‘equipment and appliances’
4101:8-34-01	3402	To add a section for Emergency and standby power systems
	3402.1	To add installation requirements
	3402.1.1	To add stationary generators specific requirements
	3402.1.1.1	To add engine-driven generators requirements
	3402.1.1.1.1	To add requirements for fuel tanks connected to generator assemblies
	3402.1.1.1.1.1	To add requirements for engine-mounted tanks
	3402.1.1.1.1.2	To add requirements for other fuel tanks
	3402.1.1.1.2	To add gaseous fuel supply requirements
4101:8-44-01	4401.2	To update the OAC referenced codes
	NFPA	To add standards 30-15, 37-10, 110-10, and 111-10 and update standard 31-11
	UL	To add standard 2200-12

4101:8-1-01 Administration.

[Comment: When a reference is made within this rule to a federal statutory provision, an industry consensus standard, or any other technical publication, the specific date and title of the publication as well as the name and address of the promulgating agency are listed in rule 4101:8-43-01 of the Administrative Code. The application of the referenced standards shall be limited and as prescribed in section 102.5 of rule 4101:8-1-01 of the Administrative Code.]

SECTION 101
GENERAL

101.1 Title. *Chapters 4101:8-1 to 4101:8-25, 4101:8-29, 4101:8-34, and 4101:8-44 of the Administrative Code are designated as the "Residential Code of Ohio for One-, Two-, and Three-Family Dwellings" for which the designation "RCO" may be substituted. The 2009 edition of the "International Residential Code", first printing, Chapters 2 through 24, 29, and 44 as published by the "International Code Council, Inc." is used as the basis of this document as is incorporated fully except as modified in italic herein. References in these chapters to "this code", to the "residential code", or to the "Residential Code of Ohio" in other sections of the Administrative Code shall mean the "Residential Code of Ohio for One-, Two-, and Three-Family Dwellings".*

101.2 Scope. *The provisions of the "Residential Code of Ohio for One-, Two-, and Three-Family Dwellings" shall apply to the construction, alteration, movement, enlargement, replacement, repair, equipment, use and occupancy, location, maintenance, removal, and demolition of every one-, two-, or three-family dwelling, any appurtenances connected or attached to such buildings or structures, or any accessory structure incidental to that dwelling house including electrical equipment associated with bodies of water as defined in article 680 of NFPA 70 as referenced in part IX, chapter 44. This code also applies to a one-family, two-family, or three-family dwelling house that is used as a model to promote the sale of a similar dwelling house. No building or its equipment or accessories, to which the rules of the board apply shall be erected, constructed, or installed, except in conformity with the rules of the board.*

This code also applies to such other residential occupancies as referenced and to the extent indicated in section 310 of the "OBC".

Exceptions:

1. *Manufactured home units constructed under "24 CFR Part 3280," "Manufactured Home Construction and Safety Standards" and within the scope of the rules adopted by the Ohio Manufactured Home Commission. This exception does not apply to alterations of, additions to, or changes of occupancy of manufactured homes.*

2. *Multiple single-family dwelling structures more than three stories in height and with more than three dwelling units.*

    a. *The structure of one-, two-, and three-family dwellings which are more than three stories in height shall comply with the structural requirements of the OBC or section 106.5 of this code.*

3. Residential buildings attached to occupancies that are within the scope of the OBC shall comply with the requirements of the "OBC".

4. Buildings or structures containing two or three dwelling units with a shared exit shall comply with the requirements of the "OBC."

5. Buildings or structures which are incident to the use for agricultural purposes of the land on which said buildings or structures are located, provided such buildings or structures are not used in the business of retail trade; for the purposes of this section, a building or structure is not considered used in the business of retail trade if fifty per cent or more of the gross income received from sales of products in the building or structure by the owner or operator is from sales of products produced or raised in a normal crop year on farms owned or operated by the seller (see sections 3781.06 and 3781.061 of the Revised Code);

6. Agricultural labor camps;

7. Type A or Type B family day-care homes, except for the inspection required for licensure by the "Ohio Department of Jobs and Family Services (ODJFS)". This required inspection shall be conducted by the certified building department having jurisdiction in accordance with the inspection checklist found on the board of building standard's website.;

8. Buildings or structures which are designed, constructed, and maintained in accordance with federal standards and regulations and are used primarily for

federal and state military purposes where the U.S. secretary of defense, pursuant to 10 U.S.C. Sections 18233(A)(1) and 18237, has acquired by purchase, lease, or transfer, and constructs, expands, rehabilitates, or corrects and equips, such buildings or structures as he determines to be necessary to carry out the purposes of Chapter 1803 of the U.S.C.

9. Sewerage systems, treatment works, and disposal systems (including the tanks, piping, and process equipment associated with these systems) regulated by the legislative authority of a municipal corporation or the governing board of a county or special district owning or operating a publicly owned treatment works or sewerage system as stated in division (A) of section 6111.032 of the Revised Code.

10. Building sewer piping.

11. Private water systems (including tanks, foundations, piping, and process equipment associated with these systems) regulated by the Ohio Department of Health in accordance with section 3701.344 of the Revised Code.

101.3 Intent. *The purpose of this code is to establish uniform minimum requirements for the erection, construction, repair, alteration, and maintenance of residential buildings, including construction of industrialized units. Such requirements shall relate to the conservation of energy, safety, and sanitation of buildings for their intended use and occupancy with consideration for the following:*

1. ***Performance.*** *Establish such requirements, in terms of performance objectives for the use intended. Further, the rules shall consider the following:*

   1.1 The impact that the state residential building code may have upon the health, safety, and welfare of the public;

   1.2 The economic reasonableness of the residential building code;

   1.3 The technical feasibility of the residential building code;

   1.4 The financial impact that the residential building code may have on the public's ability to purchase affordable housing.

2. ***Extent of use.*** *Permit to the fullest extent feasible, the use of materials and technical methods, devices, and improvements which tend to reduce the cost of construction without affecting minimum requirements for the health, safety, and security of the occupants of buildings without preferential treatment of types or classes of materials or products or methods of construction.*

3. ***Standardization.*** *To encourage, so far as may be practicable, the standardization of construction practices, methods, equipment, material and techniques, including methods employed to produce industrialized units.*

This code does not prevent a local governing authority from adopting additional regulations governing residential structures if the regulations comply with this section.

3.1. A local governing authority shall, and any person may, notify the board of building standards of any regulation the local governing authority adopts related to content within the scope of this code and request that the board of building standards ~~to~~ determine whether that regulation conflicts with the state residential building code.

3.1.1. Not later than sixty days after receiving a notice to review local regulations for conflict, the board shall determine, based upon a recommendation from the advisory committee, whether the regulation conflicts with the state residential building code and shall notify any person who submitted the notice and the local governing authority that adopted the regulation of the board's determination.

3.1.2 If the board determines that a conflict does not exist, the board shall take no further action with regard to the regulation. If the board determines a conflict exists and the regulation is not necessary to protect the health or safety of the persons within the local governing authority's jurisdiction, the regulation is not valid and the local governing authority may not enforce the regulation.

3.1.3 If the board determines that a conflict exists and that the regulation is necessary to protect the health or safety of the persons within the local governing authority's jurisdiction, the board shall adopt a rule to incorporate the regulation into the state

residential building code. Until the rule becomes a part of the state residential building code, the board shall grant a temporary variance to the local governing authority and any similarly situated local governing authority to which the board determines the temporary variance should apply.

101.4 Reasonable application. *The rules of the board and proceedings shall be liberally construed in order to promote its purpose. When the residential building official finds that the proposed design is a reasonable interpretation of the provisions of this code, it shall be approved. Materials, equipment and devices approved by the building officials pursuant to section 114 shall be constructed and installed in accordance with such approval.*

SECTION 102
APPLICABILITY AND JURISDICTIONAL AUTHORITY

102.1 General. *Where, in any specific case, different sections of this code specify different materials, methods of construction or other requirements, the most restrictive shall govern. Where there is a conflict between a general requirement and a specific requirement, the specific requirement shall be applicable.*

102.2 Other laws. *The provisions of this code shall not be deemed to nullify any provisions of state or federal law. Municipal corporations may make further and additional regulations, not in conflict with Chapters 3781. and 3791. of the Revised Code or with the rules of the board of building standards. However approval by the board of building standards of any fixture, device, material, system, assembly or product of a manufacturing process, or method or manner of construction or installation shall constitute approval for their use anywhere in Ohio.*

102.3 Rules of the board. *As provided in division (B) of section 3781.11 of the Revised Code, the rules of the board of building standards shall supersede and govern any order, standard, or rule of the divisions of state fire marshal or industrial compliance in the department of commerce, and the department of health and of counties and townships, in all cases where such orders, standards or rules are in conflict with the rules of the board of building standards, except that rules adopted and orders issued by the fire marshal pursuant to Chapter 3743. of the Revised Code prevail in the event of a conflict.*

The rules of the board of building standards adopted pursuant to section 3781.10 of the Revised Code shall govern any rule or standard adopted by the board pursuant to sections 4104.02 and 4105.011 of the Revised Code.

102.4 Application of references. *References to chapter or section numbers, or to provisions not specifically identified by number, shall be construed to refer to such chapter, section or provision of this code.*

102.5 Referenced codes and standards. *The codes and standards referenced in this code shall be considered part of the requirements of this code to the prescribed extent of each such reference. When a reference is made within the code to a federal statutory provision, an industry consensus standard, or any other technical publication, the specific date and title of the publication as well as the name and address of the promulgating agency are listed in Chapter ~~44~~.*

Unless specified otherwise in this code, reference to the term "International Residential Code" shall be changed to "residential code"; reference to "International Fire Code" shall be changed to "fire prevention code"; and reference in design and construction provisions to "one-and two-family dwellings" shall be changed to "one-, two-, and three-family dwellings."

Because the "International Code Council" has placed design and construction information throughout its model code documents, including into the fire prevention code, any referenced code requirements relating to the design, construction, alteration, movement, enlargement, replacement, repair, equipment, use and occupancy, location, removal, and demolition of every building or structure within the scope of this code, shall be enforced by the residential building official.

Where differences occur between provisions of this code and referenced standards listed in Chapter 44, the provisions of this code shall apply.

102.6 Partial invalidity. *In the event any part or provision of this code is held to be illegal or void, this shall not have the effect of making void or illegal any of the other parts or provisions thereof, and it shall be presumed that this code would have been adopted without such illegal or invalid parts or provisions.*

102.7 Existing structures. *The provisions of section 113 shall control the alteration, repair, addition, maintenance, and change of occupancy of any existing structure.*

The occupancy of any structure currently existing on the date of adoption of this code shall be permitted to continue without change provided there are no orders of the residential building official pending, no evidence of fraud, or no serious safety or sanitation hazard. When requested, such approvals shall be in the form of a "Certificate of Occupancy for an Existing Building" in accordance with section 111.

Buildings constructed in accordance with plans which have been approved prior to the effective date of this code are existing buildings.

102.8 Non-required work. *Any component, building element, equipment, system or portion thereof not required by this code shall be permitted to be installed provided that it is constructed or installed in accordance with this code to the extent of the installation.*

> ***102.8.1 Fire protection systems****. Non-required fire protection systems shall be installed in accordance with Chapter 29_to the extent of the intended installation.*
>
> ***102.8.2 Elevators and lifts.*** *When a non-required elevator is intended to be installed, it shall be designed and installed in accordance with the residential elevator provisions in Part 5.3 of the ANSI A17.1. Non-required platform (wheelchair) lifts shall be designed and installed in accordance with ASME A18.1.*

102.9 Temporary structures. *The residential building official is authorized to issue approvals for temporary structures. Such approvals shall be in the form of a "Certificate of Occupancy for a Temporary Building" in accordance with section 111.1.5. This section does not apply to time-limited occupancies in existing structures. See section 111.1.4 for time-limited occupancies.*

> ***102.9.1 Conformance.*** *Temporary structures shall conform to the structural strength, fire safety, means of egress, accessibility, light, ventilation and sanitary requirements of this code as necessary to ensure the public health, safety and general welfare.*

102.9.2 Termination of approval. *The residential building official is authorized to terminate approval for a temporary structure and to order the temporary structure to be discontinued if conditions of the approval have been violated or the structure or use poses an immediate hazard to the public or occupants of the structure.*

102.10 Work exempt from approval. *Approval shall not be required for the following:*

Building:

1. *One-story detached accessory structures used as tool and storage sheds, playhouses and similar uses, provided the floor area does not exceed two hundred square feet (11.15 m^2) and playground structures.*

2. *Fences not over six feet (1829 mm) high.*

3. *Retaining walls which are not over four feet (1219 mm) in height measured from the bottom of the footing to the top of the wall, unless supporting a surcharge.*

4. *Water tanks supported directly upon grade if the capacity does not exceed five thousand gallons (18 927 L) and the ratio of height to diameter or width does not exceed two to one.*

5. *Sidewalks and driveways not more than thirty inches (762 mm) above grade and not over any basement or story below and which are not part of an accessible route.*

6. *Painting, papering, tiling, carpeting, cabinets, counter tops and similar finish work.*

7. *Swings and other playground equipment accessory to a one, two, or three-family dwelling.*

8. *Window awnings supported by an exterior wall which do not project more than fifty-four inches (1372 mm) from the exterior wall and do not require additional support.*

9. *Decks not exceeding 200 square feet (18.58 m^2)in area, that are not more than 30 inches (762mm) above grade at any point, are not attached to a dwelling, and do not serve the exit door required by section 311.2.*

10. *Above-ground storage tanks as defined in rule 4101:8-2-01 of the Administrative Code and the associated tank foundations.*

Electrical:

1. *Listed cord-and-plug connected temporary decorative lighting.*
2. *Reinstallation of attachment plug receptacles but not the outlets thereof.*
3. *Replacement of branch circuit overcurrent devices of the required capacity and type in the same location.*
4. *Electrical wiring, devices, appliances, apparatus, or equipment operating at less than 25 volts and not capable of supplying more than 50 watts of energy.*
5. *Repairs and Maintenance: Approval shall not be required for minor repair work, including the replacement of lamps or the connection of approved portable electrical equipment to approved permanently installed receptacles.*

Gas:

1. *Portable heating, cooking, or clothes drying appliances;*
2. *Replacement of any minor part that does not alter approval of equipment or make such equipment unsafe.*
3. *Portable fuel cell appliances that are not connected to a fixed piping system and are not interconnected to a power grid.*
4. *Gas distribution piping owned and maintained by public or municipal utilities and located upstream of the point of delivery.*

Mechanical:

1. *Portable heating appliances;*

2. *Portable ventilation equipment;*

3. *Portable cooling units;*

4. *Steam, hot or chilled water piping within any heating or cooling equipment regulated by this code.*

5. *Replacement of any minor part that does not alter approval of equipment or make such equipment unsafe.*

6. *Portable evaporative cooler.*

7. *Self-contained refrigeration systems containing ten pounds (4.54 kg) or less of refrigerant or that are actuated by motors of one horsepower (746 W) or less.*

8. *Portable fuel cell appliances that are not connected to a fixed piping system and are not interconnected to a power grid.*

9. *Heating and cooling distribution piping owned and maintained by public or municipal utilities.*

Plumbing:

1. *The repair of leaks in drains, water, soil, waste or vent pipe; provided, however, that if any concealed trap, drain-pipe, water, soil, waste or vent pipe becomes defective and it becomes necessary to remove and replace the same with new material, such work shall be considered as new work and an approval shall be obtained and inspection made as provided in this code.*

2. *The clearance of stoppages or the repair of leaks in pipes, valves or fixtures, and the removal and reinstallation of water closets, provided such repairs do not involve or require the replacement or rearrangement of valves, pipes or fixtures.*

102.10.1 Emergency repairs. *Where equipment replacements and repairs must be performed in an emergency situation, an application for approval shall be submitted within the next working business day to the building official.*

102.10.2 Minor repairs. *Minor repairs to structures may be to residential structures made without application or notice to the residential building official. Such repairs shall not include the cutting away of any wall, partition or portion thereof, the removal or cutting of any structural beam or load bearing support, or the removal or change of any required means of egress, or rearrangement of parts of a structure affecting the egress requirements; nor shall ordinary repairs include addition to, alteration of, replacement or relocation of any standpipe, water supply, sewer, drainage, drain leader, gas, soil, waste, vent or similar piping, electric wiring or mechanical or other work affecting public health or general safety.*

102.11 Building department jurisdictional limitations. *A municipal, township, or county residential building department that has been certified by the board of building standards, pursuant to section 103.2, shall enforce provisions of the rules of the board and of Chapters 3781. and 3791. of the Revised Code, relating to construction, arrangement, and the erection of residential buildings or parts thereof as defined in the rules of the board in accordance with the certification except as follows:*

1. ***Fire.*** *The fire chief of municipal corporations or townships, having fire departments, shall enforce all provisions of the rules of the board relating to fire prevention.*

2. ***Health.*** *The department of health, the boards of health of city or general health districts, or the residential departments of building inspection of municipal corporations, townships, or counties shall enforce such provisions relating to sanitary construction.*

3. ***Sewerage and drainage system.*** *In accordance with Section 3781.03 of the Revised Code, the department of the city engineer, in cities having such departments, the boards of health of health districts, or the sewer purveyor, as appropriate, shall have complete supervision and regulation of the entire sewerage and drainage system of the jurisdiction, including the building sewer and all laterals draining into the street sewers. Such*

department or agency shall have control and supervision of the installation and construction of all drains and sewers that become a part of the sewerage system of the jurisdiction and shall issue all the necessary permits and licenses for the construction and installation of all building sewers and of all other lateral drains that empty into the main sewers. Such department or agency shall keep a permanent record of the installation and location of every drain and sewerage system of the city.

4. ***Enforcement.*** *This section does not exempt any officer or department from the obligation of enforcing any provision of the rules of the board.*

5. ***State Projects****. Certification does not confer any jurisdiction to a certified building department to:*

   5.1 The construction of buildings by the state of Ohio or on land owned by the state of Ohio including, but is not limited to, its agencies, authorities, boards, commissions, administrative departments, instrumentalities, community or technical college districts, but does not include other political subdivisions.

   Exception: *Local school district building projects funded by the Ohio school facilities commission in accordance with Chapter 3318. of the Revised Code where the local certified building department is authorized by the board to regulate construction of school facilities.*

   5.2 Park districts created pursuant to Chapter 1545. of the Revised Code.

Note*: The lands owned by Miami university in the city of Oxford and Oxford township in Butler County and leased to private individuals or corporations under the land rent provisions of the Act of February 17, 1809, as set forth at 7 Ohio laws 184, are subject to local certified building department jurisdiction and are exempt from these provisions.*

SECTION 103
CERTIFIED RESIDENTIAL BUILDING DEPARTMENTS, PERSONNEL, AND APPEALS BOARDS

Refer to division 4101:7 of the Administrative Code for existing relocated building department, building department personnel, and boards of building

appeals certification requirements.

SECTION 104
DUTIES AND RESPONSIBILITIES

104.1 General. *Personnel of residential building departments that have been certified by the board of building standards, pursuant to rule 4101:7-3-01 of the Administrative Code, shall be responsible for performing the duties described in this section.*

104.2 Residential building department personnel duties and responsibilities. *Municipal, township, or county residential building departments certified by the board shall have personnel qualified to perform the enforcement duties and responsibilities described in this section.*

104.2.1 Residential building official. *The residential building official is responsible for the enforcement of the rules of the board and of Chapters 3781. and 3791. of the Revised Code relating to the construction, arrangement, and the erection of residential buildings or parts thereof and may perform duties outlined in this section and in sections 104.2.2.1 and 104.2.3.1 below. All residential building officials shall conduct themselves in a professional, courteous, impartial, responsive, and cooperative manner. Residential building officials shall be responsible to assure that a system is in place to track and audit all projects, to assure that all residential building department personnel perform their duties in accordance with this section, and for the overall administration of a residential building department as follows:*

104.2.1.1 Applications and plan approvals. *The residential building official shall receive applications, examine or cause the submitted construction documents to be examined, ascertain by such examinations whether the construction indicated and described is in accordance with the requirements of this code, and shall issue plan approvals for the construction, erection, alteration, demolition, and moving of buildings and structures.*

104.2.1.2 Orders. *The residential building official shall issue all orders in accordance with section 109 to ensure compliance with this code.*

104.2.1.3 Inspections. *If the plans for the erection, construction, repair, alteration, relocating, or equipment of a building are subject to inspection by the residential building official, under section 108, the residential building official shall make such inspections as the building official is authorized to make or shall cause to be made such inspections, investigations, and determinations as are necessary to determine whether or not the work which has been performed and the installations which have been made are in conformity with the approved construction documents.*

104.2.1.3.1 Incidental inspection program. *The residential building official may establish an incidental inspection program conforming to guidelines established by the board and shall:*

1. Maintain a list of the type of incidental inspections that may be conducted in the jurisdiction.

2. Maintain a list of the certified inspectors participating in the incidental inspection program. All persons participating in the program must hold at least one inspector certification issued by the board.

3. Submit to the board, upon initiation of the program and annually with the yearly operational report, the list of incidental inspections that may be conducted and the list of inspectors participating in the incidental inspection program.

4. Ensure that the incidental inspector receives the training which provides, in the judgment of the residential building official, sufficient knowledge to competently perform the incidental inspections.

5. Ensure that the incidental inspector conducts inspections in accordance with section 104.2.1.3.1.1.

104.2.1.3.1.1 Incidental inspection program inspection procedures. *The procedures for incidental inspection program inspectors participating in the program shall be as follows.*

1. Upon completion of an incidental inspection and a finding by the incidental inspection program inspector that completed work is in accordance with the approved construction documents, the inspector may communicate the findings to the owner's on-site representative, shall make a note of the satisfactory inspection on

an on-site inspection record and in the inspector's log, and communicate the findings to the residential building official who shall then proceed in accordance with section 108.2.11.

2. When in the course of conducting an incidental inspection, an incidental inspection program inspector finds any work is contrary to the approved construction documents or observes a code violation that is either shown incorrectly or not adequately addressed or detailed in the approved construction documents, the inspector shall immediately notify an individual certified to make such inspections for the residential building department having jurisdiction to inspect the non-compliant work who shall then proceed in accordance with section 108.6.

3. When in the course of conducting an incidental inspection, an incidental inspection program inspector observes an unsafe condition or a serious hazard, the inspector shall communicate the condition to the owner or the owner's on-site representative and immediately notify the residential building official who shall then proceed in accordance with section 108.6.3.

4. When in the course of conducting an incidental inspection involving a industrialized unit, an incidental inspection program inspector finds that the industrialized unit has been constructed contrary to the construction documents approved by the board, the inspector shall immediately notify an individual certified to make such inspections for the building department having jurisdiction to inspect the non-compliant work who shall then proceed in accordance with section 108.6.4.

104.2.1.4 Residential department records. *The residential building official shall keep official records of applications received, certificate of plan approvals issued, notices and orders issued, certificates of occupancy, and other such records required by the rules of the board of building standards. Such information shall be retained in the official permanent record for each project. One set of approved residential construction documents shall be retained by the residential building official for a period of not less than one hundred eighty days from date of*

completion of the permitted work, or as required by the residential department's document retention regulations.

104.2.1.5 Department reports. *The residential building official shall be responsible for the submission of reports and any requested special information to the board of building standards as required in section 103.2.6. Failure to submit these reports in a timely manner as required by rule or by special request or inquiry of the board of building standards may be grounds for board action as described in section 103.3.10.*

104.2.2 Residential plans examiners. *A residential plans examiner is responsible for the examination of construction documents in accordance with section 107, within the limits of their certification, to determine compliance with the rules of the board and may perform duties outlined in this section and in section 104.2.3.1 below. All residential plan examiners shall effectively communicate the results of their plan review to the owner or the owner's representative and the residential building official. A residential plans examiner shall conduct themselves in a professional, courteous, impartial, responsive, and cooperative manner.*

104.2.2.1 Residential plans examiner. *A residential plans examiner is responsible for the examination of all types of residential construction documents to determine compliance with the rules of the board.*

104.2.2.1.1 Residential plans examiner trainee. *A residential plans examiner trainee is responsible for the examination of all types of residential construction documents to determine compliance with the rules of the board under the direct supervision of an individual holding a residential plans examiner certification.*

104.2.2.1.2 Electrical plans examiner. *An electrical plans examiner is responsible for the examination of construction documents related to electrical systems to determine compliance with the rules of the board.*

If the department does not have in its employ or under contract persons holding the electrical plans examiner certification, then the examination of the construction documents for compliance with the electrical provisions of the code shall be done by the residential plans

examiner.

104.2.3 Residential inspectors. *A residential inspector is responsible for performing inspections and determining that work, for which they are certified to make inspections, is performed in compliance with the approved residential construction documents. All residential inspectors shall inspect the work to the extent of the approval given when residential construction documents were approved by the residential building official and for which the inspection was requested. All residential inspectors shall effectively communicate the results of their inspections as required by section 108, and shall conduct themselves in a professional, courteous, impartial, responsive, and cooperative manner.*

104.2.3.1 Residential building inspector. *A residential building inspector is responsible to determine compliance with the approved residential construction documents in accordance with section 108.*

A residential building inspector trainee is designated to determine compliance with approved residential construction documents, in accordance with section 108, under the direct supervision of an individual holding a residential building inspector certification.

104.2.3.2 Residential plumbing inspector. *A residential plumbing inspector is responsible to determine plumbing system compliance with approved residential construction documents in accordance with section 108.*

A residential plumbing inspector trainee is designated to determine plumbing system compliance with approved residential construction documents, in accordance with section 108, under the direct supervision of an individual holding a residential plumbing inspector certification.

104.2.3.3 Electrical safety inspector. *An electrical safety inspector is responsible to determine electrical systems compliance with approved construction documents in accordance with section 108.*

An electrical safety inspector trainee is designated to determine electrical systems compliance with approved construction documents, in accordance

with section 108, under the direct supervision of an individual holding an electrical safety inspector certification.

104.2.3.4 Elective inspectors. *Residential building departments may elect to employ inspectors designated as responsible for making inspections to determine that work is performed in compliance with approved construction documents certified as follows:*

104.2.3.4.1 Residential mechanical inspector. *A residential mechanical inspector is responsible to determine compliance with the approved residential construction documents for heating, ventilating and air conditioning (HVAC) systems, and the associated refrigeration, fuel gas, and heating piping systems in accordance with section 108.*

If the residential department does not have in its employ or under contract persons holding the residential mechanical inspector certification, then the enforcement of the mechanical provisions shall be done by the residential building inspector;

A residential mechanical inspector trainee is designated to determine compliance with the approved residential construction documents for heating, ventilating and air conditioning (HVAC) systems, and the associated refrigeration, fuel gas, and heating piping systems, in accordance with section 108, under the direct supervision of an individual holding a residential mechanical inspector certification.

104.2.4 Liability. *Liability of certified residential building department personnel for any tortious act will be determined by Ohio courts to the applicable provisions of Chapter 2744. of the Revised Code.*

104.3 Violation of duties. *Any person affected by the improper actions of any residential building department, residential building official, residential plans examiner, residential inspector, or fire protection system designer certified by the board of building standards may file a written complaint with the board. Complaints will be processed by the board in accordance with the procedures outlined in the applicable certification rule found in division 4101:7 of the Administrative Code.*

SECTION 105
APPROVALS

105.1 Approvals required. *Any owner or authorized agent who intends to construct, enlarge, alter, repair, move, or change the occupancy of a residential building or structure, or portion thereof, or to erect, install, enlarge, alter, repair, remove, convert or replace any electrical, gas, mechanical, plumbing system, other residential building service equipment, or piping system the installation of which is regulated by this code, or to cause any such work to be done, shall first make application to the residential building official of a certified residential building department and obtain the required approval.*

105.1.1 Nonconformance approval. *When residential construction documents are submitted which do not conform with the requirements of the rules of the board, such documents may be approved by the residential building official provided such nonconformance is not considered to result in a serious hazard and the owner or owner's representative subsequently submits revised residential construction documents showing evidence of compliance with the applicable provisions of the rules of the board. In the event such residential construction documents are not received within thirty days, the residential building official shall issue an adjudication order revoking the plan approval.*

105.1.2 Conditional approval. *When residential construction documents are submitted which cannot be approved under the other provisions of this rule, the residential building official, may at the request of the owner or owner's representative, issue a conditional plan approval when an objection to any portion of the residential construction documents results from conflicting interpretations of the code, or compliance requires only minor modifications to the building design or construction. No conditional approval shall be issued where the objection is to the application of specific technical requirements of the code or correction of the objection would cause extensive changes in the building design or construction. A conditional approval is a conditional license to proceed with construction or materials up to the point where construction or materials objected to by the agency are to be incorporated into the building. The conditions objected to shall be in writing from the residential building official which shall be an adjudication order denying the issuance of a license and may be appealed in accordance with section 3781.19 of the Revised Code.*

In the absence of fraud or a serious safety or sanitation hazard, all items previously examined shall be conclusively presumed to comply with Chapters 3781. and 3791. of the Revised Code and the rules of the board. Reexamination of the residential construction documents shall be limited to those items in the adjudication order. A conditional plan approval is not a phased plan approval.

105.1.3 Previous approvals. *This code shall not require changes in the residential construction documents, construction or designated occupancy of a structure for which a lawful approval has previously been issued or otherwise lawfully authorized, and the construction of which has been pursued in good faith within one year of the approval of residential construction documents. One extension shall be granted for an additional year if requested by the owner at least ten days in advance of the expiration of the approval and upon payment of any fee not to exceed one hundred dollars.*

If, after the start of construction, work is delayed or suspended for more than six months, the approval is invalid. Two extensions shall be granted for six months if requested by the owner at least ten days in advance of the expiration of the approval and upon payment of any fee for each extension not to exceed one hundred dollars.

105.1.4 Phased approval. *The residential building official shall issue an approval for the residential construction of foundations or any other part of a building, structure, or building service equipment before the residential construction documents for the whole building, structure or building service equipment have been submitted, provided that adequate information and detailed statements have been filed complying with applicable requirements of this code. The holder of such approval for the foundation or other parts of a building or structure shall proceed at the holder's own risk with the building operation and without assurance that an approval for the entire structure will be granted. Such approvals shall be issued for various stages in the sequence of construction provided that all information and data required by the code for that portion of the building or structure has been submitted. The holder of a phased plan approval may proceed only to the point for which approval has been given.*

105.2 Validity of approval. *The construction, erection, and alteration of a building, and any addition thereto, and the equipment and maintenance thereof,*

shall conform to required plans which have been approved by the residential building official, except for minor deviations which do not involve a violation of the rules of the board. In the absence of fraud or a serious safety or sanitation hazard, any residential structure built in accordance with approved plans shall be conclusively presumed to comply with Chapters 3781. and 3791. of the Revised Code and the rules of the board.

Exception: *Industrialized units shall be constructed to conform to the plans approved by the board.*

105.3 Expiration. *The approval of plans or drawings and specifications or data in accordance with this rule is invalid if construction, erection, alteration, or other work upon the building has not commenced within twelve months of the approval of the residential construction documents.*

One extension shall be granted for an additional twelve-month period if requested by the owner at least ten days in advance of the expiration of the approval and upon payment of a fee not to exceed one hundred dollars.

105.4 Extension. *If, in the course of construction, work is delayed or suspended for more than six months, the approval of residential construction documents is invalid. Two extensions shall be granted for six months each if requested by the owner at least ten days in advance of the expiration of the approval and upon payment of a fee for each extension of not more than one hundred dollars.*

105.5 Certificate of plan approval. *After residential construction documents have been approved in accordance with section 107, the residential building official shall furnish the owner/applicant a certificate of plan approval.*

105.5.1 Content. *The form of the certificate shall be as prescribed by the residential building official and shall show the serial number of the certificate, the address at which the building or equipment under consideration is or is to be located, the name and address of the owner, the signature of the residential building official who issued the certificate, and such other information as is necessary to facilitate and ensure the proper enforcement of the rules of the board.*

105.5.2 Duplicate issued upon request. *Upon application by the owner, the residential building official shall issue a duplicate certificate of plan approval to replace a lost or destroyed original.*

SECTION 106
CONSTRUCTION DOCUMENTS

106.1 Submittal documents. *Residential construction documents and other data shall be submitted in two or more sets with each application for an approval. Before beginning the construction of any building for which construction documents are required under section 105, the owner or the owner's representative shall submit construction documents to the residential building official of a certified residential building department for approval. When construction documents have been found to be in compliance with the rules of the board of building standards in accordance with section 107 by a certified residential building department, that determination of compliance shall be deemed sufficient to obtain approval for construction pursuant to section 105.2 and the residential building official shall issue the certificate of plan approval. Construction documents for the installation of industrialized units shall be submitted to the residential building official for approval in accordance with the provisions of section 106.1.4.*

106.1.1 Professionally prepared construction documents*. Construction documents which have been prepared by a registered design professional who prepared the same as conforming to the requirements of the rules of the board pertaining to design loads, stresses, strength, and stability, or other requirements involving technical analysis, need be examined only to the extent necessary to determine conformity of such residential construction documents with other requirements of this code.*

106.1.2 Residential fire protection system construction documents. *Residential construction documents for fire protection systems authorized to be submitted by individuals certified pursuant to Chapter 4101:2-87 of the Administrative Code shall:*

1. *When submitted under the signature of an individual certified under section 3781.105 of the Revised Code, be processed in the same manner as construction documents submitted under the signature of a registered design professional. Any statistical data, reports, explanations, plan*

description, or information that would not also be required for a similar submission by a registered design professional need not be submitted by a certified designer.

2. *If certified by a registered design professional or individual certified under section 3781.105 of the Revised Code as conforming to requirements of the rules of the board pertaining to design loads, stresses, strength, stability, or other requirements involving technical analysis, be examined by the building department official only to the extent necessary to determine conformity of such construction documents with other requirements of this Code.*

3. ~~*Indicate thereon the individual and company installing the fire protection systems who shall be certified by the fire marshal pursuant to section 3737.65 of the Revised Code. In the event that the installer is not known at the time of plan approval, partial plan approval shall be granted subject to subsequent submission by addendum of the name of the qualified installer prior to installation of any part of the fire protection systems*~~.

106.1.3 Information on construction documents. *Residential Construction documents shall be dimensioned and drawn upon suitable material. Electronic media documents are permitted to be submitted when approved by the residential building official. Construction documents shall be coordinated and of sufficient clarity to indicate the location, nature and extent of the work proposed and show in detail that it will conform to the provisions of this code. Construction documents, adequate for the scope of the project, shall include information necessary to determine compliance with this code.*

1. ***Index.*** *An index of drawings located on the first sheet;*

2. ***Site plan.*** *A site plan showing a north orientation arrow, the size and location of new residential construction and all existing structures on the site, all property and interior lot line locations with setback and side yard dimensions and distances from buildings to lot lines, the locations of the nearest streets, the established street grades, the locations, types and sizes of all utility lines, the location of any fences, and the elevations of all proposed finished grades; and it shall be drawn in accordance with an accurate boundary line survey. In the*

case of demolition, the site plan shall show construction to be demolished and the location and size of existing structures and construction that are to remain on the site or plot. The residential building official is authorized to waive or modify the requirement for a site plan when the application for approval is for alteration or repair or when otherwise warranted.

2.1 ***Residential buildings or structures located in flood hazard areas.*** *Construction documents submitted for residential buildings or structures located in communities with identified flood hazard areas, pursuant to section 1612, shall include the current FEMA "Flood Hazard Boundary Map" (FHBM), "Flood Insurance Rate Map" (FIRM) or "Flood Boundary Floodway Map" (FBFM) for the project location. The required site plan shall include building elevations using the same datum as the related flood hazard map. The owner shall be responsible for the compliance with local flood damage prevention regulations for additional critical elevation information for the project site. The elevation certification and dry flood proofing certification, when required for buildings or structures located in communities with identified flood hazard areas, shall be submitted to the residential building official.*

2.2 ***Site accessibility plan.*** *For structures of four or more dwellings, information in plan view and details shall be submitted indicating compliance with the accessibility provisions of this code for the exterior of the building in addition to any accessible features of the interior. When applicable, the plans shall include: the exterior accessible route between all facilities required to be connected; ramp locations and elevations along the exterior accessible route; number of and details for the required accessible van and car parking spaces and passenger loading areas; location and detail of required accessibility signage; grade/topographic elevations before and after proposed grading when site impracticality is intended to be applied.*

3. ***Floor plans.*** *Complete floor plans, including plans of full or partial basements and full or partial attics. Floor plans must show all relevant information such as door swings, stairs and ramps, windows, shafts, all portions of the means of egress, etc., and shall be*

sufficiently dimensioned to describe all relevant space sizes. Wall materials shall be described by cross-hatching (with explanatory key), by notation, or by other clearly understandable method. Spaces must be identified by how each space is intended to be used.

4. ***Exterior wall envelope.*** *The exterior envelope shall be described in sufficient detail to determine compliance with this code and the referenced standards. Details or elevations shall be provided which describe floor to floor dimensions, flashing, intersections with dissimilar materials, corners, end details, control joints, intersections at roof, eaves, or parapets, means of drainage, water-resistive membrane, details around openings, location and type of vapor retarders, window and door "U"-values, and insulation location and "R"-values. The supporting documentation shall fully describe the exterior wall system, which was tested, where applicable, as well as the test procedure used.*

5. ***Sections.*** *Cross sections, wall sections, details including typical connections as required to fully describe the residential building construction showing wall, ceiling, floor and roof materials. Residential construction documents shall describe the exterior wall envelope in sufficient detail to determine compliance with this code.*

6. ***Structure.*** *Complete structural description of the residential building including size and location of all structural elements used in the design of the residential building and other data as required to fully describe the structural system.*

7. ***Ratings.*** *The fire-resistance ratings of all structural elements as required by this code, data substantiating all required fire-resistance ratings including details showing how penetrations will be made for electrical, mechanical, plumbing, and communication conduits, pipes, and systems, and the materials and methods for maintaining the required structural integrity, fire-resistance rating, and firestopping.*

8. ***System descriptions.*** *Description of the mechanical, plumbing and electrical systems, including: materials; location and type of fixtures and equipment; materials, and sizes of all ductwork; location and type*

of heating, ventilation, air conditioning and other mechanical equipment; and all lighting and power equipment.

9. ***Accessibility provisions.*** *When non-required accessibility components are intended to be installed, indicate whether the project will comply with Type A, Type B, Type C (Visitable), or Accessible units in ICC/ANSI A117.1 listed in Chapter 44 as pursuant to Section 320.1.*

10. Additional information. *Additional graphic or text information as may be reasonably required by the residential building official to allow the review of special or extraordinary construction methods or equipment.*

106.1.3.1 Fire protection system drawings. *Construction documents for the fire protection system(s) shall be submitted to indicate conformance with this code and shall be approved prior to the start of system installation.*

106.1.3.2 Manufacturer's installation instructions. *Manufacturer's installation instructions, as required by this code, shall be available on the job site at the time of inspection.*

106.1.4 Industrialized units. *When construction includes the use of industrialized units approved by the board, documentation shall be provided to the building official describing how they are to be used. Before these items are installed or used, the following shall be submitted:*

1. A copy of the construction documents approved by the board; and

2. Details pertaining to on-site interconnection of modules or assemblies.

Exception*: When construction includes the use of industrialized units for one-, two-, and three- family dwellings and their accessory structures, the documents shall be provided to the residential building official. If no residential department is certified in a jurisdiction, construction documents for one-, two-, or three-family dwellings comprised of industrialized units are not required to be submitted for approval.*

106.1.4.1. Definitions.

Closed construction. *An assembly of materials or products manufactured in such a manner that its structural, plumbing, electrical, environmental control, or fire protection elements or components are concealed and are not readily accessible for inspection at the site of its erection, without disassembly, damage, or destruction. Closed construction includes assemblies where only one of the components is not accessible for inspection. (For example, an accessory srtucture where all the electrical conductors and components are exposed for inspection and its roof and wall panels have exposed structural members but the floor panel structural members are not exposed.)*

Industrialized units. *Industrialized units are prefabricated components comprised of closed construction manufactured at a location remote from the site of intended use and transported to a building site for its subsequent use. Industrialized units are not restricted to housing for one-, two-, and three-family dwellings, but include all prefabricated forms of building elements and assembled construction units, intended for both structural and service equipment purposes in all buildings of all groups. Prefabricated shop assemblies may be shipped in structurally complete units ready for installation in the building structure or in knock-down and packaged form for assembly at the site.*

106.1.4.2 General terms. *Such terms as heart modules or cores, modules, modulars, service cores, prefabs, sectional or sectionalized, panels or panelized construction, and specific terms including "prefabricated-subassembly, -building, -unit, -unit service equipment" shall be considered industrialized units. They may be self-sufficient or interdependent as a unit or group of units and used together or incorporated with standard construction methods to form a completed structural entity.*

For a complete description of the Ohio industrialized unit program refer to OBC Section 113.

106.2 Evidence of responsibility. *Required residential construction documents, when submitted for review as required under section 107, shall bear the identification of the person primarily responsible for their preparation.*

106.3 Amended construction documents. *If substantive changes to the*

residential building are contemplated after first document submission, or during construction, those changes must be submitted to the residential building official for review and approval prior to those changes being executed. The residential building official may waive this requirement in the instance of an emergency repair, or similar instance.

106.4 Alternative materials and methods of construction and equipment. *For approval of a device, material or assembly that does not conform to the performance requirements in this code, section 114 shall apply.*

106.5 Alternative engineered design. *The design, documentation, inspection, testing and approval of an alternative engineered system shall comply with sections 106.5.1 to 106.5.3.*

106.5.1 Design criteria. *An alternative engineered design shall conform to the intent of the provisions of this code and shall provide an equivalent level of quality, strength, effectiveness, fire resistance, durability and safety. Materials, equipment or components shall be designed and installed in accordance with the manufacturer's installation instructions.*

106.5.2 Submittal. *A registered design professional shall indicate on the application that the system is an alternative engineered design. The approval and permanent approval records shall indicate that an alternative engineered design was part of the approved installation. Where special conditions exist, the residential building official is authorized to require additional construction documents to be prepared by a registered design professional.*

106.5.3 Technical data. *The registered design professional shall submit sufficient technical data to substantiate the proposed alternative engineered design and to prove that the performance meets the intent of this code.*

Exception: *Approval of alternative materials, products, assemblies and methods of construction in accordance with Section 114.3.2.*

SECTION 107
PLAN APPROVAL PROCESS

107.1 Plan review required. *Where the rules of the board are applicable under section 101.2, before a residential building or addition to a residential building is*

constructed or erected, and before a residential building is altered or relocated, or residential building equipment is installed, or a resubmission of construction documents is required or received, residential construction documents relating to the work and equipment under consideration shall be prepared in conformity with section 106 and be submitted to the residential building department for examination and approval.

107.2 Application for plan approval. *To obtain a plan approval, the owner or the owner's representative shall first file an application in writing on a form furnished by the residential building department for that purpose. Such application shall:*

1. *Identify and describe the work to be covered for which application is made for approval.*

2. *Describe the land on which the proposed work is to be done, street address or similar description that will readily identify and locate the proposed building or work.*

3. *Be accompanied by residential construction documents and other information as required in section 106.1.*

4. *Be signed by the owner, or the owner's authorized agent.*

5. *Give such other data and information as required by the residential building official.*

6. *Identify and clearly indicate whether the project or portion of a project intends to utilize an industrialized unit.*

7. *Identify and clearly indicate whether the project or portion of a project intends to utilize an assembly of individually listed or labeled products.*

107.2.1 Time limitation of application. *The approval of construction documents under this section is a "license" and the failure to approve such construction documents as submitted within thirty days after filing or the disapproval of such construction documents is an "adjudication order denying the issuance of a license" requiring the opportunity for an "adjudication hearing" as provided by sections 119.07 to 119.13 of the*

Revised Code and as modified by sections 3781.031 and 3781.19 of the Revised Code. In accordance with section 109, an adjudication order denying the issuance of a license shall specify the reasons for such denial.

If residential construction documents have been reviewed for compliance with the rules of the board, an adjudication order has been issued to the owner and the owner's representative, and the owner has neither exercised the right to appeal pursuant to section 110 nor resubmitted corrected documents, the application is invalid six months from the date of the issuance of the adjudication order.

107.3 Order of plan review. *Residential construction documents submitted for approval shall be examined for compliance with the rules of the board in the order received, unless otherwise consented to by the building owners affected by deferred examination.*

107.4 Review of plans. *When residential construction documents have been submitted to the residential building department for review and approval, the building official shall review as appropriate or shall cause the residential construction documents to be examined for compliance with the rules of the board by assigning the examination duty to an appropriately certified individual. The residential building official or plans examiner shall first determine whether the construction documents are adequate as required in section 106.*

107.4.1 Inadequate construction documents. *If residential construction documents are determined to be incomplete or inadequate for examination, the residential plans examiner shall report the findings to the residential building official. The residential plans examiner shall examine the construction documents to the extent possible and identify what information from section 106 is missing and needed to complete the required examination. Upon receipt and review of the report, the residential building official shall proceed as required in section 107.6.*

107.4.2 Resubmitted documents. *If residential construction documents are resubmitted in response to an adjudication order, the review for compliance shall be limited to determining that the item of non-compliance, and any work affected, has been corrected and shall not be deemed to authorize another review of unmodified construction documents previously determined to comply.*

107.4.3 Sealed construction documents*. Residential construction documents, if prepared by an Ohio registered design professional to conform to the requirements of the rules of the board pertaining to design loads, stresses, strength, and stability, or other requirements involving technical analysis, need be examined only to the extent necessary to determine conformity of such construction documents with other requirements of the rules of the board.*

107.5 Plan review, compliance with rules of the board. *If the residential construction documents are determined to comply with the rules of the board, the residential plans examiner shall communicate the findings and recommend the conditions and type of approval to the residential building official.*

107.5.1 Residential building official approval. *The residential building official shall evaluate the residential plans examiner's recommendations. When the residential construction documents have been determined to conform to the applicable provisions of the rules of the board, the residential building official shall endorse or stamp such plans as approved and issue the certificate of plan approval in accordance with section 105.5.*

107.5.2 Posting. *The certificate of plan approval shall be posted in a conspicuous location on the site. The owner and the contractor shall preserve and keep the certificate posted until the final inspections have been completed.*

107.6 Plan review, items of noncompliance. *When the residential construction documents are examined and items of noncompliance with the rules of the board are found, the residential building official shall proceed as required in either section 107.6.1 or section 107.6.2.*

107.6.1 Communication process for items of non-compliance.

1. *Item(s) of non-compliance shall be communicated to the owner or the owner's representative and the following options shall be offered:*

   1.1 The owner will revise the construction documents and resubmit to the department.

1.2 The items of noncompliance will not be brought into compliance and will be referred to the residential building official as indicated in item 4 below.

2. The owner or the owner's representative shall indicate which option (item 1 above) will be exercised.

3. Notations of the communication shall be made on a plan review record. The notations shall include the residential plans examiner's name, the date of the communication with the owner or the owner's representative, the observed items of noncompliance, the code citation related to the item(s) of noncompliance, the action necessary to correct the item(s) of noncompliance, the option chosen by the owner or the owner's representative, the name of the person communicated with, and the estimated dates of compliance and resubmission, if applicable.

4. If the owner or the owner's representative indicates that the work will not be brought into compliance with the rules of the board or requests an adjudication order, the residential plans examiner shall report to the building official in accordance with section 107.6.2.

107.6.2 Residential building official determination of noncompliance. *The residential building official shall evaluate the results of the plans examination and render a final determination as to whether the items of non-compliance are to be communicated to the owner in the form of an adjudication order complying with section 109. The residential building official shall also determine whether any approvals are possible, and issue the appropriate approval as described in section 105.*

107.7 Approved residential construction document sets. *One set of approved residential construction documents shall be kept by the residential building official. The other set(s) shall be returned to the applicant, kept at the work site, along with manufacturers' installation instructions and product information, and shall be available for use by the residential inspectors.*

SECTION 108
INSPECTION PROCESS

108.1 General. *After residential construction documents have been approved, construction or work may proceed in accordance with the approved documents. Construction or work for which an approval is required shall be subject to inspection. It shall be the duty of the owner or the owner's duly authorized representative to notify the residential building department when work is ready for inspection. Access to and means for inspection of such work shall be provided for any inspections that are required by this code.*

It shall be the duty of the owner or the owner's authorized representative to cause the work to remain accessible and exposed for inspection purposes. Such construction or work shall remain accessible and exposed for inspection purposes until the work has been inspected to verify compliance with the approved construction documents, but failure of the inspectors to inspect the work within four days, exclusive of Saturdays, Sundays, and legal holidays, after the work is ready for inspection, allows the work to proceed.

Subsequent work is allowed to proceed only to the point of the next required inspection.

108.2 Required inspections. *At the time that the certificate of plan approval is issued, the residential building official shall provide to the owner, or the owner's representative, a list of all required inspections for each project. The required inspection list shall be created from the applicable inspections set forth in sections 108.2.1 to 108.2.12. The residential building official, upon notification from the owner or the owner's agent that the work is ready for inspection, shall cause the inspections set forth in the required inspection list to be made by an appropriately certified residential inspector in accordance with the approved residential construction documents.*

> ***108.2.1 Lot line markers required.*** *Before any work is started in the construction of a residential building or an addition to a residential building to which the rules of the board are applicable under section 101.2, all boundary lines shall be clearly marked at their intersections with permanent markers or with markers which are offset at a distance which is of record with the owner.*
>
> ***108.2.2 Footing or foundation inspection.*** *Footing and foundation inspections shall be made after excavations for footings are complete and any required reinforcing steel is in place. For concrete foundations, any required*

forms shall be in place prior to inspection. Materials for the foundation shall be on the job, except where concrete is ready mixed in accordance with "ASTM C 94", the concrete need not be on the job.

108.2.3 Concrete slab and under-floor inspection. *Concrete slab and under-floor inspections shall be made after in-slab and under-floor reinforcing steel and building service equipment, conduit, insulation, vapor retarder, piping accessories and other ancillary equipment items are in place, but before any concrete is placed or floor sheathing installed, including the subfloor.*

108.2.4 Lowest floor elevation. *The elevation certification required in section 322 shall be submitted to the residential building official.*

108.2.5 Frame inspection. *Framing inspections shall be made after the roof deck or sheathing, all framing, fire blocking and bracing are in place and pipes, chimneys and vents to be concealed are complete and the rough electrical, plumbing, heating wires, pipes and ducts are approved.*

108.2.6 Lath or gypsum board inspection. *Lath and gypsum board inspections shall be made after lathing and gypsum board, interior and exterior, is in place, but before any plastering is applied or before gypsum board joints and fasteners are taped and finished.*

Exception: *Gypsum board that is not part of a fire-resistive assembly or a shear assembly.*

108.2.7 Fire-resistant penetrations. *Protection of joints and penetrations in fire-resistance-rated assemblies shall not be concealed from view until inspected and approved.*

108.2.8 Energy efficiency inspections. *Inspections shall be made to determine compliance with Chapter 11 and shall include, but not be limited to, inspections for: envelope insulation "R" and "U" values, fenestration "U" value, duct system "R" value, infiltration air barriers, caulking/sealing of openings in envelope and ductwork, and "HVAC" and water heating equipment efficiency.*

108.2.9 Testing of residential building service equipment. *Inspections shall be made of all residential building services equipment to ensure that it has*

been installed in accordance with the approved construction documents, the equipment listings, and the manufacturer's installation instructions. Inspections shall include, but not be limited to, inspections for the following systems and their associated components: mechanical heating and ventilating systems, mechanical exhaust systems, plumbing systems, fire protection systems, and electrical systems.

108.2.10 Other inspections. *In addition to the inspections specified above, the residential building official is authorized to cause to be made or require other inspections of any residential construction work to be made_to ascertain compliance with the provisions of this code.*

Where applications are submitted for projects of unusual magnitude of construction, the building official may require inspections or full-time project representation by a registered design professional or inspection agency. This inspector/project representative shall keep daily records and submit reports as required by the building official.

Exception: *Where the building official requires full-time project inspection, the installation of a fire protection system may be inspected by a person certified under section 3781.105 of the Revised Code. The person shall be certified in the appropriate subfield of fire protection systems being inspected – automatic sprinkler, fire alarm, or special hazards systems design.*

108.2.11 Inspections, compliance with construction documents. *When an inspector from the department having jurisdiction finds that completed work is in accordance with the approved construction documents, the inspector shall communicate the findings to the owner's on-site representative, shall make a note of the satisfactory inspection on an on-site inspection record and in the inspector's log, and communicate the findings to the residential building official. The residential building official, after review of the findings, shall issue the certificate of occupancy in accordance with section 111.*

108.2.12 Industrialized unit inspections. *If the project will include the use of industrialized units approved by the board, the residential building official shall cause inspections to be made for on-site construction to complete the installation of the industrialized unit in conformance with the applicable provisions of the rules of the board. Such inspections shall include:*

1. *Connection to on-site construction, interconnection of modules, connection to utilities. The inspections and conducting of required tests shall not require the destruction or disassembly of any factory-constructed component authorized by the board.*

2. *Inspection of the unit for damage resulting from transportation, improper protection of exposed parts from inclement weather or other causes. Damage shall be repaired as required by the residential building official to comply with the applicable provisions of the rules of the board;*

3. *Inspection of the unit to determine if it is marked by an insignia furnished by the board; and*

4. *Inspect the unit to determine if the floor plan, exterior elevations, and exposed details are in conformance with the construction documents approved by the board.*

108.2.14 Incidental inspection program. *Notwithstanding section 108.6, when the scope of work of a project involves primarily one discipline with incidental involvement of other disciplines and would, therefore, require multiple types of certified inspectors to inspect the same work for compliance, the residential building official is authorized to establish an incidental inspection program in accordance with Section 104.2.1.3.1.*

108.3 Inspection agencies. *The residential building official is authorized to accept reports of approved inspection agencies, provided such agencies are approved in accordance with the rules of the board of building standards.*

108.4 Right of entry. *The residential building official, or the residential building official's designee, is authorized to enter the structure or premises at reasonable times to inspect or to perform the duties imposed by this code, provided that credentials are presented to the occupant and that entry is requested and obtained. Where permission to enter has not been obtained, is denied, or the residential building official has probable cause to believe that there exists in a structure or upon a premises a condition which is a serious hazard, the residential building official shall proceed as required in section 109 and shall also have recourse to the remedies provided by law to secure entry.*

108.5 Inspections, compliance with residential construction documents. *When an individual certified to make inspections from the residential department having jurisdiction finds that completed work is in accordance with the approved residential construction documents, the certified individual shall communicate the findings to the owner's on-site representative, shall make a note of the satisfactory inspection on an on-site inspection record and in the residential inspector's log, and communicate their findings to the residential building official. The residential building official, after review of the findings, shall issue the certificate of occupancy in accordance with section 111.*

108.6 Inspections, observation of violations, unsafe conditions, or serious hazards. *When an individual certified to make inspections from the residential department having jurisdiction finds that any work in connection with the location, erection, construction, repair, alteration, moving, or equipment of a residential building is contrary to the approved residential construction documents for the same, the residential building inspector shall proceed as required in either section 108.6.1 or 108.7.*

108.6.1 Communication process for work contrary to approved construction documents.

1. Communicate the nature of the differences to the owner or the owner's on-site representative and offer the following options

1.1 The owner will bring the item of noncompliance into compliance,

1.2 The owner will revise the construction documents and resubmit to the residential department,

1.3 The items of noncompliance will not be brought into compliance and will be referred to the residential building official as indicated in item 4 below.

2. The owner or the owner's on-site representative shall indicate which option (item 1 above) will be exercised

3. Notations on the on-site inspection record and in the residential inspector's log shall be made. The notations shall include the name of

the certified individual authorized to make the inspections, the date of the inspection, the type of inspection, the observed items of noncompliance, the option chosen by the owner or the owner's on-site representative, the name of the person communicated with, and the estimated dates of compliance and follow-up inspections, if applicable.

4. *If the owner or the owner's on-site representative indicates that the work will not be brought into compliance with the approved residential construction documents, the individual certified to make inspections shall submit a report to the residential building official for the final determination of noncompliance in accordance with section 108.7.*

108.6.2 Observation of violations not shown on plans. *If an individual certified to make inspections, in the course of performing the assigned or requested inspections, observes a code violation that was either shown incorrectly or not adequately addressed or detailed in the approved residential construction documents, the certified individual shall communicate the finding to the residential building official so that the residential building official can make a determination of whether the code violation is of such significance to warrant communicating the finding to the owner or the owner's representative as a recommended change.*

108.6.3 Observation of unsafe conditions or serious hazards. *If an individual certified to make inspections, in the course of performing the assigned or requested inspections, observes an unsafe condition or a serious hazard, the certified individual shall communicate that condition to the owner or the owner's on-site representative and shall report the findings immediately to the residential building official so that the residential building official can make a final determination of whether the violation constitutes a serious hazard which requires the issuance of an adjudication order as required in section 109.*

108.6.4 Industrialized units, observations of noncompliance. *When an individual certified to make inspections from the residential department having jurisdiction finds that a residential industrialized unit has been constructed contrary to the residential construction documents approved by the board, the certified individual shall report the nonconformance to the residential building official. The residential building official shall notify the board of all violations of section 108.2.13. The board or its designee and the*

residential building official shall determine the corrective action to be taken before the residential building is approved to be occupied.

108.7 Residential building official determination of noncompliance. *The residential building official shall evaluate any report of items of noncompliance and render a final determination as to whether the items of non-compliance are to be communicated to the owner in the form of an adjudication order complying with section 109. The residential building official shall also determine whether any approvals are possible.*

108.8 Acceptance, performance, and operational testing. *Acceptance, performance, and operational testing shall be conducted as required in the applicable code or referenced standard. Advanced notice of the test schedule shall be given to the building official. The residential building official may require that the tests be conducted in the presence of the building official or certified residential inspector. Testing and inspection records shall be made available to the residential building official or inspector, upon request, at all times during the fabrication of the systems and the erection of the building.*

108.8.1 New, altered, extended or repaired systems. *New systems and parts of existing systems, which have been altered, extended, renovated or repaired, shall be tested as prescribed herein to disclose leaks and defects.*

108.8.2 Apparatus, material and labor for tests. *Apparatus, material and labor required for testing a system or part thereof shall be furnished by the owner or the owner's representative. Required tests shall be conducted by and at the expense of the owner or the owner's representative.*

108.8.3 Reinspection and testing. *Where any work or installation does not pass an initial test or inspection, the inspector shall proceed as outlined in section 108.6.*

Section 109
Orders, Violations, and Unsafe Buildings

109.1 Adjudication orders required. *When the residential building official denies any approval or takes action in response to findings of non-compliance, such action shall be initiated by issuing an adjudication order, prior to seeking any remedy, civil or criminal. Every adjudication order shall:*

1. *Clearly identify the section of law or rules violated;*

   1.1 *Clearly identify, in a contrasting and obviously marked manner, all violations related to accessibility.*

2. *Specifically indicate which detail, installation, site preparation, material, appliance, device, addition, alteration to structures, residential construction documents, assemblages or procedures are necessary to change to comply with the order;*

   2.1 *When issued to stop work, the order shall also clearly indicate the specific work that is required to cease, when the work must cease and the conditions under which the cited work will be permitted to resume. The order to stop work shall be given to the owner of the property involved, to the owner's agent and the person doing the work.*

3. *Include notice of the procedure for appeal and right to a hearing if requested within thirty days of the mailing of the order. The order shall also indicate that, at the hearing, the owner may be represented by counsel, present arguments or contentions orally or in writing, and present evidence and examine witnesses appearing for or against the owner;*

4. *Specify a reasonable period of time in which to bring the item(s) on the order into compliance;*

5. *Include the signature of the residential building official;*

6. *The order shall be sent by certified mail, return receipt requested, to the owner and any individual designated as a representative or agent by the owner in such matters.*

109.2 Response to orders. *The person receiving an order shall exercise their right to appeal within 30 days of the mailing of the order, comply with the order, or otherwise be released from the order by the residential building official.*

109.3 Prosecution and penalties. *When an owner fails to comply with section 109.2, the owner may be prosecuted and is subject to a fine of not more than five*

hundred dollars as provided for in section 3791.04 of the Revised Code.

109.3.1 Unlawful continuance. *Failure to cease work after receipt of an order to stop work is hereby declared a public nuisance.*

109.4 Unsafe buildings. *Structures or existing equipment that are unsafe or unsanitary due to inadequate means of egress facilities, inadequate light and ventilation, or which constitute a fire hazard, or are otherwise dangerous to human life, shall be deemed a serious hazard. Where a residential building is found to be a serious hazard, such hazard shall be eliminated or the residential building shall be vacated, and where such residential building, when vacated, remains a serious hazard, it shall be razed.*

109.4.1 Orders, injunction proceedings. *Where the residential building official finds that a residential building is a serious hazard and the owner of such building fails, in the time specified in an order from the residential building official, to eliminate such hazard, or to vacate or raze the residential building, the residential building official shall proceed under section 3781.15 of the Revised Code.*

109.4.2 Restoration. *Where the residential structure or equipment is determined to be unsafe by the residential building official, it is permitted to be restored to a safe condition. To the extent that repairs, alterations or additions are intended to be made or a change of occupancy occurs during the restoration of the structure, such repairs, alterations, additions or change of occupancy shall comply with this chapter.*

SECTION 110
APPEALS

110.1 Hearing and right of appeal, local board of building appeals. *In order to hear and decide appeals of orders, decisions, or determinations made by the residential building official relative to the application of this code, there shall be a local appeals process established within the certified jurisdiction. Adjudication hearings shall be in accordance with sections 119.09 to 119.13 of the Revised Code, as required by section 3781.031 of the Revised Code.*

SECTION 111
CERTIFICATE OF OCCUPANCY

111.1 Approval required to occupy. *No residential building or structure, in whole or in part, shall be used or occupied until the residential building official has issued an approval in the form of a certificate of occupancy. The certificate of occupancy shall indicate the conditions under which the residential building shall be used. The building owner shall only use the structure in compliance with the certificate of occupancy and any stated conditions. The residential structure and all approved building service equipment shall be maintained in accordance with the approval. When a residential building or structure is entitled thereto (constructed according to the approved construction documents, final tests and inspections are completed, and no orders of the building official are outstanding, or as permitted in this section), the residential building official shall issue a certificate of occupancy in a timely manner.*

111.1.1 New residential buildings*. A residential building or structure erected shall not be used or occupied, in whole or in part, until the certificate of occupancy has been issued by the residential building official. Occupancy of spaces within a residential building which are unaffected by the work of work shall be allowed to continue if the residential building official determines the existing spaces can be occupied safely until the completion of the work.*

111.1.2 Residential building alterations or additions. *A residential building or structure enlarged, extended or altered, in whole or in part, shall not be occupied or used until a certificate of occupancy has been issued. Occupancy of spaces within a building which are unaffected by the work of alteration shall be allowed to continue if the residential building official determines the existing spaces can be occupied safely until the completion of the alteration.*

111.1.3 Partial occupancy. *Upon the request of the owner or owner's representative, a residential building official shall issue a certificate of occupancy before the completion of the entire work, provided that the residential building official determines that the space can be safely occupied prior to full completion of the residential building, structure, or portion without endangering life or public welfare. The certificate shall indicate the extent of the areas approved for occupancy and any time limits for completion of the work.*

111.1.4 Time-limited occupancy. *A residential building or structure hereafter changed in part from one occupancy to another for a limited time may receive*

a certificate of occupancy reflecting that time-limited occupancy provided:

1. *There are no violations of law or orders of the residential building official pending;*

2. *It is established after inspection and investigation that the proposed use is not deemed to endanger public safety and welfare ~~safely~~;*

3. *The residential building official has approved the use for an alternative purpose on a temporary basis;*

4. *The residential building official has issued a certificate of occupancy indicating any special conditions under which the building or part of the residential building can be used for the alternative purpose within the time limit specified.*

111.1.5 Temporary structures occupancy. *A residential building intended to be erected, placed and used for a period of time not to exceed one hundred eighty days that has been determined by the residential building official to be in compliance with section 102.9 shall be issued a "Certificate of Occupancy for Temporary Structures." The residential building official is authorized to grant extensions for demonstrated cause.*

111.2 Existing residential buildings. *Upon written request from the owner of an existing residential building or structure, the residential building official shall issue a certificate of occupancy, provided there are not violations of law or orders of the residential building official pending, and it is established after inspection and investigation that the alleged occupancy of the residential building or structure has previously existed. This code shall not require the removal, alteration or abandonment of, or prevent the continuance of, the occupancy of a lawfully existing residential building or structure, unless such use is deemed to endanger public safety and welfare.*

111.3 Certificate issued. *The certificate shall certify compliance with the provisions of this code, Chapters 3781. and 3791. of the Revised Code, and the purpose for which the residential building or structure may be used in its several parts. The certificate of occupancy shall contain the following:*

1. *The plan approval application number.*

2. *The name and address of the owner.*

3. *A description of that portion of the structure for which the certificate is issued.*

4. *The signature of all residential building officials having jurisdiction. When more than one residential building official has jurisdiction for a building (when the certification of the residential building department is limited for such systems as plumbing or piping systems) each shall sign the certificate of occupancy with an indication of the scope of their individual approvals.*

2. *The edition of the residential code under which the plan approval was issued.*

3. *When an automatic sprinkler system is provided, the type and description of the system shall be indicated.*

4. *Any special stipulations and conditions of the plan approval including any variances granted to the requirements of this code.*

111.4 Validity of a certificate of occupancy. *The certificate of occupancy represents an approval that is valid only when the residential building or structure is used as approved and certifies conformance with applicable provisions of the "Residential Code of Ohio for One-, Two-, and Three-family Dwellings" and Chapters 3781. and 3791. of the Revised Code. The approval is conditioned upon the building systems and equipment being maintained and tested in accordance with the approval, the "RCO", and applicable equipment and systems schedules.*

111.5 Connection of service utilities. *No connections shall be made from a utility, source of energy, fuel or power to any residential building or system that is regulated by this code for which a plan approval and inspections are required, until approved by the residential building official.*

111.6 Temporary connection. *The residential building official shall approve the temporary connection of the residential building or system to the utility source of energy, fuel or power.*

SECTION 112

CHANGES TO THE CODE

112.1 Changes, board of building standards. *The board may adopt, amend, or rescind the rules of the board on its own motion or in response to an application for changes filed pursuant to this section.*

112.2 Changes, application to the board. *Any person may apply to the board to adopt, amend, or rescind rules of the board. The application for rule change shall be on forms and in format prescribed by the board. Twelve printed copies of the application shall be filed with the secretary of the board.*

112.3 Changes, application to the residential construction advisory committee*. In addition to section 112.2, any person may apply to the residential construction advisory committee to recommend to the board that it adopt, amend, or rescind provisions of the RCO. The application for rule change shall be on forms and in format prescribed by the board and directed to the chairperson of the residential construction advisory committee. Twelve printed copies of the application shall be filed with the secretary of the board.*

112.4 Processing applications for changes. *When the secretary of the board receives a conforming application for an adoption, amendment, or annulment of a provision of the rules of the board, the secretary shall promptly deliver or mail a copy of the application to each member of the board or to each member of the residential construction advisory committee for a recommendation to the board as appropriate.*

After receiving an application for the adoption, amendment, or annulment of a provision of the rules of the board or a recommendation of the residential construction advisory committee, the board shall proceed under sections 3781.101 and 3781.12 of the Revised Code.

SECTION 113
EXISTING BUILDINGS AND STRUCTURES

113.1 General . *Provisions within this section shall control the alteration, repair, addition and change of occupancy if existing residential buildings.*

113.2 Maintenance. *Residential buildings, structures and the building equipment shall be maintained in a safe and sanitary condition and in accordance with the*

condition(s) established in current and any previous plan approvals and certificates of occupancy. Devices or safeguards which are required by this code shall be maintained in conformance with the code edition under which installed. The owner or the owner's designated agent shall be responsible for the maintenance.

The requirements of this chapter shall not provide the basis for removal or abrogation of fire protection and safety systems and devices in existing structures without approval of the residential building official.

113.3 Definitions. *The following terms shall, for the purposes of this section and as used elsewhere in the code, have the following meanings:*

CHANGE OF OCCUPANCY. *A change in the purpose or level of activity within a structure that involves a change in the application of the requirements of the code.*

HISTORIC BUILDINGS. *A residential building meeting one of the following criteria:*

1. *Listed or preliminarily determined to be eligible for listing in the "National Register of Historic Places"; or*

2. *Determined by the secretary of the U.S. department of interior as contributing to the historical significance of a registered historic district or a district preliminarily determined to qualify as an historic district; or*

3. *Designated as historic under a state or local historic preservation program that is approved by the U.S. department of interior.*

113.4 Additions and alterations. *Additions or alterations to residential buildings shall conform with the requirements of the code for new construction and shall be approved by the residential building official. Additions or alterations shall not be made to an existing residential building or structure which will cause the existing residential building or structure to be in violation of any provisions of this code. Portions of the structure not altered and not affected by the alteration are not required to comply with the code requirements for a new structure.*

Exception: *For residential buildings and structures in flood hazard areas, any additions, alterations or repairs that constitute substantial improvement of the existing structure, shall comply with the flood design requirements for new construction and all aspects of the existing structure shall be brought into compliance with the requirements for new construction for flood design.*

113.5 Alterations to and replacement of systems, components and materials. *Alterations to and replacements of an existing system (egress, fire protection, mechanical, plumbing, etc.) and materials or building components not otherwise provided for in this section, shall conform to that required for new construction to the extent of the alteration. The existing systems, materials, or components shall not be required to comply with all of the requirements of this code for new construction except to the extent that they are affected by the alteration. Alterations to and replacements of existing systems, materials, or components shall not cause them to become unsafe, hazardous, overloaded, or become less effective than when originally installed, constructed, and/or approved.*

113.6 Replacement and repairs to systems, components and materials*. Replacement of residential building components, and repairs to existing systems and materials or building components not otherwise provided for in this section, shall not be required to meet the provisions for new construction, provided such work is done in accordance with the conditions of the existing approval in the same manner and arrangement as was in the existing system, is not less safe than when originally installed and is approved.*

113.6.1 Door and window dimensions. *Minor reductions in the clear opening dimensions of replacement doors and windows that result from the use of different materials shall be allowed, whether or not they are permitted by this code.*

113.6.2 Used materials and equipment. *The use of used materials which meet the requirements of this code for new materials is permitted. Used equipment, appliances, and devices shall not be reused unless approved by the residential building official.*

113.7 Changes in occupancy. *A residential building, accessory structure, or space within a residential building shall not change in its use or purpose unless it is made to comply with the requirements of this code for such use and approved by the residential building official. An approval is not required when the code*

requirements are the same for both uses.

***113.7.1 Use of a residential building for other purposes**. No change of occupancy to uses within the scope of the OBC shall be made to any existing residential building, space within, or accessory structure unless such building is made to comply with the requirements of the OBC for such occupancy and approved by the building official with OBC enforcement authority.*

***113.7.2 Type A family day care homes**. A residential building that is intended to be used in whole or in part as a licensed type A family day-care home shall be inspected in accordance with the type A family day-care home checklist (available from the board of building standards). The residential building official shall issue a report of the findings to the Ohio department of jobs and family services.*

***113.8 Moved structures.** Residential structures moved shall be safe and sanitary and any repair, alteration, or change in occupancy shall comply with the provisions of this code for new structures. Field work, building location, foundations and foundation connections, wind loads, seismic loads, snow loads, and flood loads, shall comply with the requirements of this code.*

The residential building official shall be authorized to inspect, or require inspection at the expense of the owner, the various components of a relocated building to verify that they have not sustained damage. Building service equipment, mechanical, plumbing, and fire protection systems shall be tested to assure that they are in operating condition. Any repairs or alterations required as a result of such inspections shall be approved and completed prior to issuance of the certificate of occupancy.

***113.9 Historic buildings.** The provisions of this code relating to the construction, repair, alteration, addition, restoration and movement of residential structures, and change of occupancy shall not be mandatory for historic buildings where such residential buildings are judged by the residential building official not to constitute a distinct life safety hazard.*

***113.9.1 Flood hazard areas.** Within flood hazard areas established, the residential building shall be brought into conformance with section 322.*

***Exception:** Historic buildings.*

SECTION 114
PRODUCTS AND MATERIALS
Section 114
Products and materials

114.1 General. *Any material, product, assembly or method of construction used in a building or structure shall be approved by the building official. The provisions of this section describe the product approval process intended by the board of building standards in accordance with Section 3781.10 (C) of the Revised Code.*

114.2 Definitions. *The following words and terms shall, for the purposes of this section, have the meanings shown herein:*

Accreditation. *The formal recognition of a conformity assessment body's adherence and operation under a documented quality system whereby a third party (Accreditation Body) attests to technical competence and the specific scope of accreditation of the conformity assessment body .*

Accreditation body. *An authoritative body that is an established, independent, internationally recognized, third-party organization that performs accreditation to ascribe initial recognition and monitors, on an cyclical basis, the competency, integrity, and performance of conformity assessment bodies in accordance with established standards.*

Assembly. *A preassembled grouping of materials, products and/or components designed to act as a whole. This does not include industrialized units regulated by section 113.*

Calibration laboratory. *An established, independent, nationally recognized and accredited, third-party organization that regularly provides calibration services such as, but not limited to, tolerance testing to ensure the accuracy of measuring equipment used in construction.*

Conformity assessment body. *A body that performs conformity assessment services and can be an object of accreditation, such as a testing laboratory, inspection body, product certification body.*

Evaluation service. *An established, independent, nationally recognized and accredited, third-party conformity assessment body that is accredited as a product certification body and performs technical evaluations of building materials, products, and methods of construction where code requirements are not clear or the innovative products do not have national consensus standards. The evaluation of the product results in the issuance of a research report establishing the code compliance and conditions of its use based upon multiple sources of information including test reports, test data, performance data, or acceptance criteria, and can be approved for installation by the building official in accordance with the rules of the board.*

Fabricator inspection agency. *An established, independent, nationally recognized and accredited, third-party conformity assessment body regularly engaged in fabrication of construction materials and methods of construction.*

Field evaluation body. *An established, independent, nationally recognized and accredited, third-party conformity assessment body regularly engaged in furnishing field inspection, observation, testing, or reporting services for construction materials, products, and methods of construction.*

Industry trade association certification program. *A certification program operated by an established and nationally recognized organization, founded and funded by businesses that operate in a specific industry, where the main focus is to monitor quality assurance among associated members.*

Insignia. *A mark or label prescribed in accordance with board procedures.*

Inspection body. *An established, independent, nationally recognized and accredited, third-party conformity assessment body regularly engaged in furnishing inspection, observation, testing, or reporting*

services for construction materials, products, and methods of construction. Such services include, but are not limited to geotechnical inspections, environmental inspections, mechanical and metallurgical analysis, non-destructive testing and evaluation, chemical analysis, and structural and product testing.

***Listing agency**. An established, independent, nationally recognized and accredited, third-party conformity assessment body that is accredited as a product certification body and conducts tests on materials, products, or methods of construction to certify products that meet the criteria for compliance with nationally recognized codes and standards. The product certification body allows its insignia of conformity to be placed on a material or product by the manufacturer, identifying that the material or product has been certified by the product certification body. The product certification body maintains a list or directory of all of the materials and products that they have certified and the conditions of their use.*

***Material.** A manufactured form or substance designed to act as a whole.*

***Method of construction.** A procedure or system intended to result in a finished building, structure or portion thereof.*

***Product.** A material or device designed and manufactured to perform a predetermined function. Appliances, assemblies and equipment are also considered products.*

***Product certification body.** An established, independent, nationally recognized and accredited, third-party conformity assessment body regularly engaged in conducting evaluation services, inspections and tests on materials and products to certify compliance with nationally recognized codes and standards. Product Certification Bodies are sub-classified as either Evaluation Services or Listing Agencies.*

***Recognition.** An acceptance by the board of building standards of an accreditation body, a conformity assessment body, or an industry trade association certification program in accordance with the rules of the board of building standards.*

Special inspection agency. *An established, independent, nationally recognized and accredited, third-party conformity assessment body regularly engaged in performing special inspections as required by Chapter 17.*

Testing laboratory. *An established, independent, nationally recognized and accredited, third-party conformity assessment body regularly engaged in conducting tests of materials, products, or methods of construction to determine compliance with a specification or testing standard. The testing laboratory issues a report documenting the test results.*

Figure 114.2
ORGANIZATION OF BOARD RECOGNIZED BODIES AND CERTIFICATION PROGRAMS

114.3 Building official approval process. *The building official shall approve the use of products in accordance with Sections 114.3.1 through*

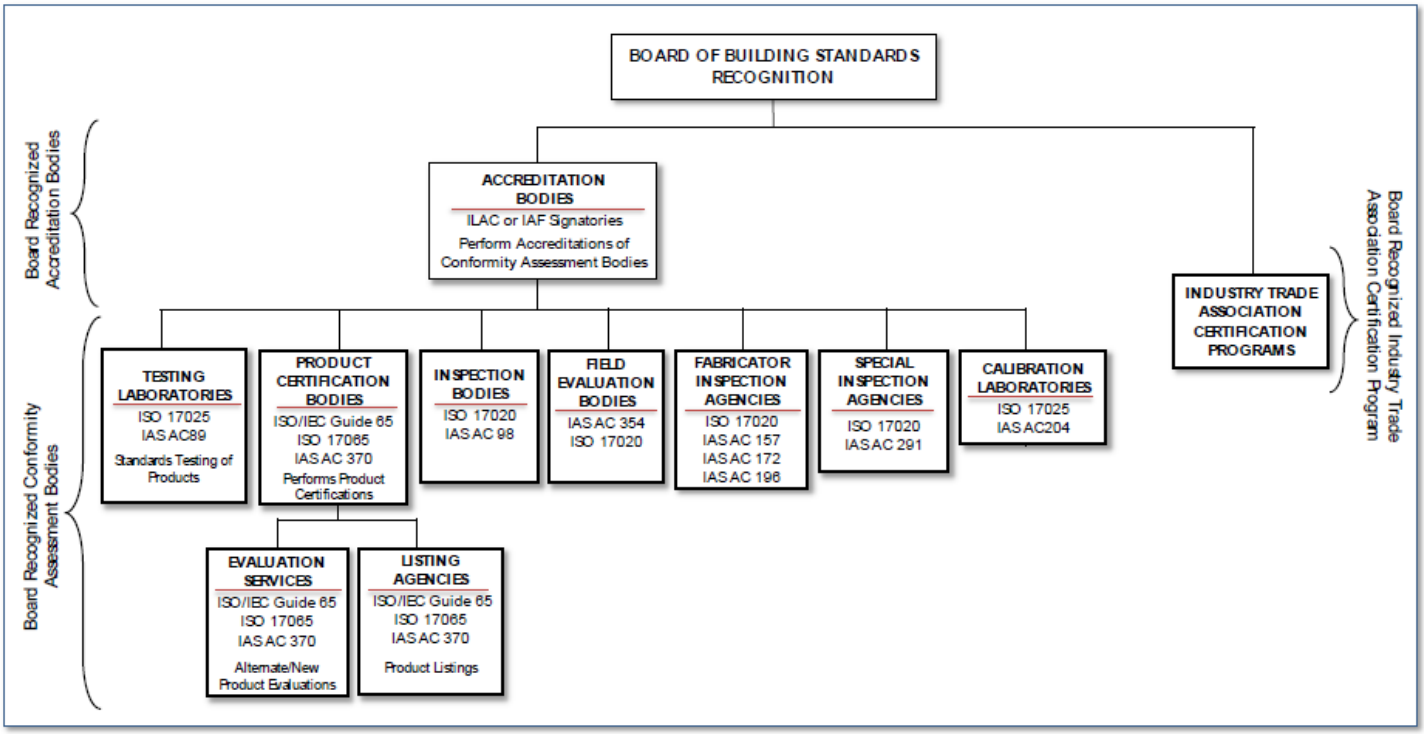

ILAC – International Laboratory Accreditation Cooperation
IAF – International Accreditation Forum
ISO – International Organization for Standardization
IAS – International Accreditation Service
IEC – International Electrotechnical Commission

114.3.3.

114.3.1 Materials, products, assemblies and methods of construction prescribed in the code.

114.3.1.1 Testing laboratories. *When test reports are required to be submitted or when the rules of the Board require materials, products, assemblies and methods of construction to conform to specific referenced standards, the building official shall verify that the proposed material, product, assembly, and method of construction has been tested by a testing laboratory recognized by the board and published on the list titled "Recognized Conformity Assessment Bodies" found on the board's website at http://www.com.ohio.gov/dico/bbs/.*

The building official shall verify that the testing laboratory is accredited to perform the specific tests prescribed in the code by verifying the testing laboratory's "scope of accreditation" found on the testing laboratory's website.

Exception: *Acceptance, performance, and operational testing reports submitted in accordance with Section 108.8 are permitted to be prepared and submitted by the individual performing the acceptance, performance, and operational tests. Board recognition is not required for persons conducting acceptance, performance, or operational tests.*

114.3.1.2 Listing agencies. *When the rules of the Board require materials, products, assemblies and methods of construction to be marked or listed and labeled in accordance with a specific referenced standard, the building official shall verify that the proposed material, product, assembly, and method of construction has been listed and labeled by a listing agency recognized by the board and published on the list titled "Recognized Conformity Assessment Bodies" found on the board's website at http://www.com.ohio.gov/dico/bbs/.*

Building officials are authorized to approve listed and labeled materials, products, assemblies and methods of construction after

verifying all of the following additional information:

1.The product is listed on the product certification body's website directory.

2. The listing is current.

3. The product is proposed to be installed/used in accordance with the listing.

4. When used as an assembly, the assembly is proposed to be installed/used in compliance with this code.

5. The extent of the listing does not include in its scope, elements of design, construction or installation otherwise in conflict with the provisions of this code such as fire-resistance and structural design.

114.3.2 Alternative materials, products, assemblies and methods of construction not prescribed in the code. *The provisions of this code are not intended to prevent the installation of any material or to prohibit any material, product, assembly or method of construction not specifically prescribed by this code, provided that any such alternative shall have a valid research report or listing from an evaluation service recognized by the board and published on a list titled "Recognized Conformity Assessment Bodies" found on the board's website at http://www.com.ohio.gov/dico/bbs/.*

The alternative material, product, assembly, or method of construction shall be deemed to be approved provided it complies with the conditions listed in the research report or listing found on the evaluation service's website.

Exceptions:

1. *Alternative materials, products, assemblies, or methods of construction submitted pursuant to section 106.5.*
2. *Industrialized units shall be approved and constructed in accordance with section 113.1 of this chapter.*

114.3.3 Used materials and products. *The use of used materials and products which meet the requirements of this code for new materials and products is permitted. Used products and materials shall not be reused unless approved by the building official.*

114.4 Process for board-recognition of "Accreditation Bodies," "Conformity Assessment Bodies," and "Industry Trade Association Certification Programs." *All accreditation bodies, conformity assessment bodies, and industry trade association certification programs shall be recognized by the board in accordance with division 4101:7 of the Administrative Code.*

Section 115
Board Organization

115.1 Meetings.

1. ***Meeting schedule.*** *No later than December thirty-first of each year, the board shall establish a schedule of the dates, times, and locations of all regular board meetings and meetings of board committees for the following calendar year. Such schedule shall be posted on the board's website: http://www.com.ohio.gov/dico/bbs/.*

2. ***Meeting location.*** *All meetings of the board shall be held in offices of the Ohio department of commerce, training room #1, 6606 Tussing Rd., Reynoldsburg, Ohio, 43068, unless otherwise designated.*

115.2 Notices. *Prior to all regular or special meetings of the board, the executive secretary shall distribute the agenda, including meeting date, time, and location, by electronic mail to any person who has requested such information.*

115.3 Rules. *All rules of the board shall be adopted in accordance with Chapter 119. of the Revised Code.*

115.4 Board committees and duties. *The board shall have three standing committees.*

1. ***Code committee.*** *The code committee provides general oversight of the board's rule promulgation and code development activities. The committee*

reviews proposed rule changes and petitions for code changes and shall make recommendations to the board for action.

2. ***Education committee.*** *The education committee provides general oversight to the board's continuing education program. The committee reviews continuing education course applications submitted for approval pursuant to paragraph (G) of rule 4101:7-3-01 of the Administrative Code and shall make recommendations to the board for action on the applications.*

3. ***Certification committee.*** *The certification committee provides general oversight to the board's personnel and building department certification program. The committee reviews personnel and building department certification applications submitted for approval pursuant to paragraph (G) of rule 4101:7-3-01 of the Administrative Code and shall make recommendations to the board for action on the applications.*

4101:8-2-01 Definitions.

[Comment: When a reference is made within this rule to a federal statutory provision, an industry consensus standard, or any other technical publication, the specific date and title of the publication as well as the name and address of the promulgating agency are listed in rule 4101:8-44-01 of the Administrative Code. The application of the referenced standards shall be limited and as prescribed in section 102.5 of rule 4101:8-1-01 of the Administrative Code.]

SECTION 201
GENERAL

201.1 Scope. Unless otherwise expressly stated, the following words and terms shall, for the purposes of this code, have the meanings indicated in this chapter.

201.2 Interchangeability. Words used in the present tense include the future; words in the masculine gender include the feminine and neuter; the singular number includes the plural and the plural, the singular.

201.3 Terms defined in other codes. Where terms are not defined in this code such terms shall have meanings ascribed to them in other code*s adopted and referenced by the Board of Building Standards*.

201.4 Terms not defined. Where terms are not defined through the methods authorized by this section, such terms shall have ordinarily accepted meanings such as the context implies.

SECTION 202
DEFINITIONS

ABOVE-GROUND STORAGE TANK. *A vessel, intended for fixed installation above grade, at grade, or below grade without backfill, used for the purpose of bulk storage, dispensing, handling or processing of hazardous, flammable or combustible liquids or gases and not connected to and utilized for the operation of building service equipment.*

ACCESSIBLE. Signifies access that requires the removal of an access panel or similar removable obstruction.

ACCESSIBLE, READILY. Signifies access without the necessity for removing a panel or similar obstruction.

ACCESSORY STRUCTURE. A *building*, the use of which is incidental to that of the dwelling(s) and which is located on the same lot.

ADDITION. An extension or increase in floor area or height of a building or structure.

ADHERED STONE OR MASONRY VENEER. Stone or masonry veneer secured and supported through the adhesion of an approved bonding material applied to an approved backing.

AIR ADMITTANCE VALVE. A one-way valve designed to allow air into the plumbing drainage system when a negative pressure develops in the piping. This device shall close by gravity and seal the terminal under conditions of zero differential pressure (no flow conditions) and under positive internal pressure.

AIR BARRIER. Material(s) assembled and joined together to provide a barrier to air leakage through the building envelope. An air barrier may be a single material, or a combination of materials.

AIR BREAK (DRAINAGE SYSTEM). An arrangement in which a discharge pipe from a fixture, appliance or device drains indirectly into a receptor below the flood-level rim of the receptor, and above the trap seal.

AIR CIRCULATION, FORCED. A means of providing space conditioning utilizing movement of air through ducts or plenums by mechanical means.

AIR-CONDITIONING SYSTEM. A system that consists of heat exchangers, blowers, filters, supply, exhaust and return-air systems, and shall include any apparatus installed in connection therewith.

AIR GAP, DRAINAGE SYSTEM. The unobstructed vertical distance through free atmosphere between the outlet of a waste pipe and the flood-level rim of the fixture or receptor into which it is discharging.

AIR GAP, WATER-DISTRIBUTION SYSTEM. The unobstructed vertical distance through free atmosphere between the lowest opening from a water supply discharge to the flood-level rim of a plumbing fixture.

AIR-IMPERMEABLE INSULATION. An insulation having an air permanence equal to or less than 0.02 L/s-m2 at 75 Pa pressure differential tested according to ASTM E 2178 or E 283.

ALTERATION. *The* construction or renovation to an existing structure other than repair or addition.

ANCHORED STONE OR MASONRY VENEER. Stone or masonry veneer secured with approved mechanical fasteners to an approved backing.

ANCHORS. See "Supports."

ANTISIPHON. A term applied to valves or mechanical devices that eliminate siphonage.

APPLIANCE. A device or apparatus that is manufactured and designed to utilize energy and for which this code provides specific requirements.

APPROVED. *Refers* to *approval* by the building official *as the result of review, investigation, inspection and testing in accordance with the provisions of this code*.

APPROVED AGENCY. *An established and accredited testing laboratory, listing agency, inspection body, or field evaluation body recognized by the board of building standards providing services consistent with their accreditation and the code section requiring the approved agency service*.

ASPECT RATIO. The ratio of longest to shortest perpendicular dimensions, or for wall sections, the ratio of height to length.

ATTIC. The unfinished space between the ceiling assembly of the top story and the roof assembly.

ATTIC, HABITABLE. A finished area, not considered a story, complying with all of the following requirements:

1. The occupiable floor area is at least 70 square feet (17 m2), in accordance with Section 304,

2. The occupiable floor area has a ceiling height in accordance with Section 305, and

3. The occupiable space is enclosed by the roof assembly above, knee walls (if applicable) on the sides and the floor-ceiling assembly below.

BACKFLOW, DRAINAGE. A reversal of flow in the drainage system.

BACKFLOW PREVENTER. A device or means to prevent backflow.

BACKFLOW PREVENTER, REDUCED–PRESSURE-ZONE TYPE. A backflow-prevention device consisting of two independently acting check valves, internally force loaded to a normally closed position and separated by an intermediate chamber (or zone) in which there is an automatic relief means of venting to atmosphere internally loaded to a normally open position between two tightly closing shutoff valves and with means for testing for tightness of the checks and opening of relief means.

BACKFLOW, WATER DISTRIBUTION. The flow of water or other liquids into the potable water-supply piping from any sources other than its intended source. Backsiphonage is one type of backflow.

BACKPRESSURE. Pressure created by any means in the water distribution system, which by being in excess of the pressure in the water supply mains causes a potential backflow condition.

BACKPRESSURE, LOW HEAD. A pressure less than or equal to 4.33 psi (29.88 kPa) or the pressure exerted by a 10-foot (3048 mm) column of water.

BACKSIPHONAGE. The flowing back of used or contaminated water from piping into a potable water-supply pipe due to a negative pressure in such pipe.

BACKWATER VALVE. A device installed in a drain or pipe to prevent backflow of sewage.

BASEMENT. That portion of a building that is partly or completely below grade (see “Story above grade”).

BASEMENT WALL. The opaque portion of a wall that encloses one side of a basement and has an average below grade wall area that is 50 percent or more of the total opaque and non-opaque area of that enclosing side.

BASIC WIND SPEED. Three-second gust speed at 33 feet (10 058 mm) above the ground in Exposure C (see Section 301.2.1) as given in Figure 301.2(4).

BATHROOM GROUP. A group of fixtures, including or excluding a bidet, consisting of a water closet, lavatory, and bathtub or shower. Such fixtures are located together on the same floor level.

BEND. A drainage fitting, designed to provide a change in direction of a drain pipe of less than the angle specified by the amount necessary to establish the desired slope of the line (see "Elbow" and "Sweep").

BOILER. *A closed vessel in which water is heated, steam is superheated, or any combination thereof, under pressure to vacuum for use externally to itself by the direct application of heat from the combustion of fuels, or from electricity or nuclear energy. The term boiler includes fired units for heating or vaporizing liquids other than water where these units are separate from processing systems and are complete within themselves.*

BOND BEAM. A horizontal grouted element within masonry in which reinforcement is embedded.

BRACED WALL LINE. A straight line through the building plan that represents the location of the lateral resistance provided by the wall bracing.

BRACED WALL LINE, CONTINUOUSLY SHEATHED. A braced wall line with structural sheathing applied to all sheathable surfaces including the areas above and below openings.

BRACED WALL PANEL. A full-height section of wall constructed to resist in-plane shear loads through interaction of framing members, sheathing material and anchors. The panel's length meets the requirements of its particular bracing method, and contributes toward the total amount of bracing required along its braced wall line in accordance with Section 602.10.1.

BRANCH. Any part of the piping system other than a riser, main or stack.

BRANCH, FIXTURE. See "Fixture branch, drainage."

BRANCH, HORIZONTAL. See "Horizontal branch, drainage."

BRANCH INTERVAL. A vertical measurement of distance, 8 feet (2438 mm) or more in developed length, between the connections of horizontal branches to a drainage stack. Measurements are taken down the stack from the highest horizontal branch connection.

BRANCH, MAIN. A water-distribution pipe that extends horizontally off a main or riser to convey water to branches or fixture groups.

BRANCH, VENT. A vent connecting two or more individual vents with a vent stack or stack vent.

BTU/H. The listed maximum capacity of an appliance, absorption unit or burner expressed in British thermal units input per hour.

BUILDING. Building shall mean any one-, two-*and three*-family dwelling *detached from other structures* used, or designed or intended to be used for human habitation, for living, sleeping, cooking or eating purposes, or any combination thereof, and shall include accessory structures thereto. *For the purposes of this code, "building" may also mean structures comprised of multiple single-family dwellings when such structures qualify in accordance with OBC section 310.1.*

BUILDING DRAIN. The lowest piping that collects the discharge from all other drainage piping inside the house and extends 30 inches (762 mm) in developed length of pipe, beyond the exterior walls and conveys the drainage to the building sewer.

BUILDING, EXISTING. Existing building is a building erected prior to the adoption of this code, or one for which a legal *approval* has been issued.

BUILDING LINE. The line established by law, beyond which a building shall not extend, except as specifically provided by law.

BUILDING OFFICIAL. *An individual who has received and maintains a certification of "Residential Building Official" in accordance with rules of the board of building standards.*

BUILDING SERVICE EQUIPMENT. *Equipment, appliances, materials, devices, and systems integrated into a building that provide space heating, air conditioning, ventilation, fire protection, lighting, electricity, sanitation, water, water heating, cooking, medical gas, medical vacuum, and clothes drying.*

Building service equipment begins from the connected stored source of liquid or gas fuel or electrical power supplying the equipment or the utility service point/point of delivery and extends through the point of use but does not include process equipment that may also be connected to the same source.

BUILDING SERVICES PIPING. *Piping systems and their component parts that are part of a building system and that promote the safe, sanitary, and energy efficient occupancy of a building. "Building services piping" includes, but is not limited to, cold and hot potable water distribution for plumbing fixtures; sanitary lines leading from plumbing fixtures; nonflammable medical gas systems; medical oxygen systems; medical vacuum systems; fire protection piping systems and compressed air in dry systems; refrigeration, chilled water, condenser, cooling tower water, brine, and water/antifreeze systems; steam, steam condensate, and hot water piping systems; heating and cooling piping systems; and fuel oil piping and fuel gas piping for heating, cooling, and cooking applications.*

BUILDING SEWER. That part of the drainage system that extends from the end of the building drain and conveys its discharge to a public sewer, private sewer, individual sewage-disposal system or other point of disposal.

BUILDING THERMAL ENVELOPE. The basement walls, exterior walls, floor, roof and any other building element that enclose conditioned spaces.

BUILT-UP ROOF COVERING. Two or more layers of felt cemented together and surfaced with a cap sheet, mineral aggregate, smooth coating or similar surfacing material.

CAP PLATE. The top plate of the double top plates used in structural insulated panel (SIP) construction. The cap plate is cut to match the panel thickness such that it overlaps the wood structural panel facing on both sides.

CEILING HEIGHT. The clear vertical distance from the finished floor to the finished ceiling.

CEMENT PLASTER. A mixture of portland or blended cement, portland cement or blended cement and hydrated lime, masonry cement or plastic cement and aggregate and other approved materials as specified in this code.

CHANGE OF OCCUPANCY. *A change in the purpose or level of activity within a structure that involves a change in the application of the requirements of the code.*

CHIMNEY. A primary vertical structure containing one or more flues, for the purpose of carrying gaseous products of combustion and air from a fuel-burning appliance to the outside atmosphere.

CHIMNEY CONNECTOR. A pipe that connects a fuel-burning appliance to a chimney.

CHIMNEY TYPES.

Residential-type appliance. An approved chimney for removing the products of combustion from fuel-burning, residential-type appliances producing combustion gases not in excess of 1,000°F (538°C) under normal operating conditions, but capable of producing combustion gases of 1,400°F (760°C) during intermittent forces firing for periods up to 1 hour. All temperatures shall be measured at the appliance flue outlet. Residential-type appliance chimneys include masonry and factory-built types.

CIRCUIT VENT. A vent that connects to a horizontal drainage branch and vents two traps to a maximum of eight traps or trapped fixtures connected into a battery.

CLADDING. The exterior materials that cover the surface of the building envelope that is directly loaded by the wind.

CLEANOUT. An accessible opening in the drainage system used for the removal of possible obstruction.

CLOSED CONSTRUCTION. *An assembly of materials or products manufactured in such a manner that its structural, plumbing, electrical, environmental control, or fire protection elements or components are concealed and are not readily accessible for inspection at the site of its erection, without disassembly, damage, or destruction. Closed construction includes assemblies where only one of the components is not accessible for inspection. (For example, an equipment enclosure where all the electrical conductors and components are exposed for inspection and its roof and wall panels have exposed structural members but the floor panel structural members are not exposed, would be required to be approved by the board in accordance with section 113 of the "OBC".) Also see definition of "Industrialized units"***.**

CLOSET. A small room or chamber used for storage.

CODE, BUILDING, MECHICAL AND PLUMBING. *When reference is made within this code to building code, mechanical code or plumbing code, those references shall have the following meanings:*

Building code or This code. *The Residential Code of Ohio, this edition.*

Mechanical code. *The current edition of the Ohio Mechanical Code.*

Plumbing code. *The current edition of the Ohio Plumbing Code.*

COMBINATION WASTE AND VENT SYSTEM. A specially designed system of waste piping embodying the horizontal wet venting of one or more sinks or floor drains by means of a common waste and vent pipe adequately sized to provide free movement of air above the flow line of the drain.

COMBUSTIBLE MATERIAL. Any material not defined as noncombustible.

COMBUSTION AIR. The air provided to fuel-burning equipment including air for fuel combustion, draft hood dilution and ventilation of the equipment enclosure.

COMMON VENT. A single pipe venting two trap arms within the same branch interval, either back-to-back or one above the other.

CONDENSATE. The liquid that separates from a gas due to a reduction in temperature, e.g., water that condenses from flue gases and water that condenses from air circulating through the cooling coil in air conditioning equipment.

CONDENSING APPLIANCE. An appliance that condenses water generated by the burning of fuels.

CONDITIONED AIR. Air treated to control its temperature, relative humidity or quality.

CONDITIONED AREA. That area within a building provided with heating and/or cooling systems or appliances capable of maintaining, through design or heat loss/gain, 68°F (20°C) during the heating season and/or 80°F (27°C) during the cooling season, or has a fixed opening directly adjacent to a conditioned area.

CONDITIONED FLOOR AREA. The horizontal projection of the floors associated with the conditioned space.

CONDITIONED SPACE. *An area or room within a building being heated or cooled, containing uninsulated ducts, or with a fixed opening directly into an adjacent conditioned space.*

CONSTRUCTION DOCUMENTS. Written, graphic and pictorial documents prepared or assembled for describing the design, location and physical characteristics of the elements of a project necessary for obtaining *an approval*. Construction drawings shall be drawn to an appropriate scale.

CONTAMINATION. An impairment of the quality of the potable water that creates an actual hazard to the public health through poisoning or through the spread of disease by sewage, industrial fluids or waste.

CONTINUOUS WASTE. A drain from two or more similar adjacent fixtures connected to a single trap.

CONTROL, LIMIT. An automatic control responsive to changes in liquid flow or level, pressure, or temperature for limiting the operation of an appliance.

CONTROL, PRIMARY SAFETY. A safety control responsive directly to flame properties that senses the presence or absence of flame and, in event of ignition failure or unintentional flame extinguishment, automatically causes shutdown of mechanical equipment.

CONVECTOR. A system-incorporating heating element in an enclosure in which air enters an opening below the heating element, is heated and leaves the enclosure through an opening located above the heating element.

CORE. The light-weight middle section of the structural insulated panel composed of foam plastic insulation, which provides the link between the two facing shells.

CORROSION RESISTANCE. The ability of a material to withstand deterioration of its surface or its properties when exposed to its environment.

COURT. A space, open and unobstructed to the sky, located at or above grade level on a lot and bounded on three or more sides by walls or a building.

CRIPPLE WALL. A framed wall extending from the top of the foundation to the underside of the floor framing of the first story above grade plane.

CROSS CONNECTION. Any connection between two otherwise separate piping systems whereby there may be a flow from one system to the other.

DALLE GLASS. A decorative composite glazing material made of individual pieces of glass that are embedded in a cast matrix of concrete or epoxy.

DAMPER, VOLUME. A device that will restrict, retard or direct the flow of air in any duct, or the products of combustion of heat-producing equipment, vent connector, vent or chimney.

DEAD END. A branch leading from a DWV system terminating at a developed length of 2 feet (610 mm) or more. Dead ends shall be prohibited except as an approved part of a rough-in for future connection.

DEAD LOADS. The weight of all materials of construction incorporated into the building, including but not limited to walls, floors, roofs, ceilings, stairways, built-in partitions, finishes, cladding, and other similarly incorporated architectural and structural items, and fixed service equipment.

DECORATIVE GLASS. A carved, leaded or Dalle glass or glazing material whose purpose is decorative or artistic, not functional; whose coloring, texture or other design qualities or components cannot be removed without destroying the glazing material; and whose surface, or assembly into which it is incorporated, is divided into segments.

DESIGN PROFESSIONAL. See “Registered design professional.”

DEVELOPED LENGTH. The length of a pipeline measured along the center line of the pipe and fittings.

DIAMETER. Unless specifically stated, the term “diameter” is the nominal diameter as designated by the approved material standard.

DIAPHRAGM. A horizontal or nearly horizontal system acting to transmit lateral forces to the vertical resisting elements. When the term “diaphragm” is used, it includes horizontal bracing systems.

DILUTION AIR. Air that enters a draft hood or draft regulator and mixes with flue gases.

DIRECT-VENT APPLIANCE. A fuel-burning appliance with a sealed combustion system that draws all air for combustion from the outside atmosphere and discharges all flue gases to the outside atmosphere.

DRAFT. The pressure difference existing between the appliance or any component part and the atmosphere, that causes a continuous flow of air and products of combustion through the gas passages of the appliance to the atmosphere.

Induced draft. The pressure difference created by the action of a fan, blower or ejector, that is located between the appliance and the chimney or vent termination.

Natural draft. The pressure difference created by a vent or chimney because of its height, and the temperature difference between the flue gases and the atmosphere.

DRAFT HOOD. A device built into an appliance, or a part of the vent connector from an appliance, which is designed to provide for the ready escape of the flue gases from the appliance in the event of no draft, backdraft or stoppage beyond the draft hood; prevent a backdraft from entering the appliance; and neutralize the effect of stack action of the chimney or gas vent on the operation of the appliance.

DRAFT REGULATOR. A device that functions to maintain a desired draft in the appliance by automatically reducing the draft to the desired value.

DRAFT STOP. A material, device or construction installed to restrict the movement of air within open spaces of concealed areas of building components such as crawl spaces, floor-ceiling assemblies, roof-ceiling assemblies and attics.

DRAIN. Any pipe that carries soil and water-borne wastes in a building drainage system.

DRAINAGE FITTING. A pipe fitting designed to provide connections in the drainage system that have provisions for establishing the desired slope in the system. These fittings are made from a variety of both metals and plastics. The methods of coupling provide for required slope in the system (see “Durham fitting”).

DUCT SYSTEM. A continuous passageway for the transmission of air which, in addition to ducts, includes duct fittings, dampers, plenums, fans and accessory air-handling equipment and appliances.

DURHAM FITTING. A special type of drainage fitting for use in the durham systems installations in which the joints are made with recessed and tapered threaded fittings, as opposed to bell and spigot lead/oakum or solvent/cemented or soldered joints. The tapping is at an angle (not 90 degrees) to provide for proper slope in otherwise rigid connections.

DURHAM SYSTEM. A term used to describe soil or waste systems where all piping is of threaded pipe, tube or other such rigid construction using recessed drainage fittings to correspond to the types of piping.

DWELLING. Any building that *exclusively* contains one, two, *or three* dwelling units, *each of which may be occupied by a family and no more than five lodgers or boarders,* intended, or designed to be built, used, rented, leased, let or hired out to be occupied, or that *is* occupied for living purposes, *physically separated from adjacent structures, and with an independent exit from each dwelling unit.*

DWELLING, ONE-, TWO-, OR THREE-FAMILY*. See Dwelling.*

DWELLING UNIT. A single unit providing complete independent living facilities for one or more persons, including permanent provisions for living, sleeping, eating, cooking and sanitation. *The dwelling unit may include any accessory space intended for the exclusive use of the occupants of an individual dwelling unit such as a private garage, greenhouse, etc.*

DWV. Abbreviated term for drain, waste and vent piping as used in common plumbing practice.

EFFECTIVE OPENING. The minimum cross-sectional area at the point of water-supply discharge, measured or expressed in terms of diameter of a circle and if the opening is not circular, the diameter of a circle of equivalent cross-sectional area. (This is applicable to air gap.)

ELBOW. A pressure pipe fitting designed to provide an exact change in direction of a pipe run. An elbow provides a sharp turn in the flow path (see “Bend” and “Sweep”).

EMERGENCY ESCAPE AND RESCUE OPENING. An operable exterior window, door or similar device that provides for a means of escape and access for rescue in the event of an emergency.

ENGINE-MOUNTED TANK. *A fuel tank furnished by the engine manufacturer or the emergency power system supplier and mounted on the engine, the engine-frame, or under as a subbase.*

EQUIPMENT (OR FIXTURE). *Any plumbing, heating, electrical, ventilating, air conditioning, refrigerating and fire protection devices and components of systems other than appliances, and elevators, dumb waiters, and other mechanical facilities or installations that are related to building services.*

EQUIVALENT LENGTH. For determining friction losses in a piping system, the effect of a particular fitting equal to the friction loss through a straight piping length of the same nominal diameter.

ESCARPMENT. With respect to topographic wind effects, a cliff or steep slope generally separating two levels or gently sloping areas.

ESSENTIALLY NONTOXIC TRANSFER FLUIDS. Fluids having a Gosselin rating of 1, including propylene glycol; mineral oil; polydimenthyoil oxane; hydrochlorofluorocarbon, chlorofluorocarbon and hydrofluorocarbon refrigerants; and FDA-approved boiler water additives for steam boilers.

ESSENTIALLY TOXIC TRANSFER FLUIDS. Soil, water or gray water and fluids having a Gosselin rating of 2 or more including ethylene glycol, hydrocarbon oils, ammonia refrigerants and hydrazine.

EVAPORATIVE COOLER. A device used for reducing air temperature by the process of evaporating water into an airstream.

EXCESS AIR. Air that passes through the combustion chamber and the appliance flue in excess of that which is theoretically required for complete combustion.

EXHAUST HOOD, FULL OPENING. An exhaust hood with an opening at least equal to the diameter of the connecting vent.

EXISTING INSTALLATIONS. Any plumbing system regulated by this code that was legally installed prior to the effective date of this code, or for which *an approval* has been issued.

EXIT. *That portion of a means of egress system between the exit access and the exit discharge or public way. Exit components include exterior exit doors at the level of exit discharge, interior exit stairways, interior exit ramps, exit passageways, exterior exit stairways and exterior exit ramps and horizontal exits.*

EXTERIOR INSULATION AND FINISH SYSTEMS (EIFS). EIFS are nonstructural, nonload-bearing exterior wall cladding systems that consist of an insulation board attached either adhesively or mechanically, or both, to the substrate; an integrally reinforced base coat; and a textured protective finish coat.

EXTERIOR INSULATION AND FINISH SYSTEMS (EIFS) WITH DRAINAGE. An EIFS that incorporates a means of drainage applied over a water-resistive barrier.

EXTERIOR WALL. An above-grade wall that defines the exterior boundaries of a building. Includes between-floor spandrels, peripheral edges of floors, roof and basement knee walls, dormer walls, gable end walls, walls enclosing a mansard roof and basement walls with an average below-grade wall area that is less than 50 percent of the total opaque and non-opaque area of that enclosing side.

FACING. The wood structural panel facings that form the two outmost rigid layers of the structural insulated panel.

FACTORY-BUILT CHIMNEY. A listed and labeled chimney composed of factory-made components assembled in the field in accordance with the manufacturer's instructions and the conditions of the listing.

FENESTRATION. Skylights, roof windows, vertical windows (whether fixed or moveable); opaque doors; glazed doors; glass block; and combination opaque/glazed doors.

FIBER-CEMENT SIDING. A manufactured, fiber-reinforcing product made with an inorganic hydraulic or calcium silicate binder formed by chemical reaction and reinforced with discrete organic or inorganic nonasbestos fibers, or both. Additives which enhance manufacturing or product performance are permitted. Fiber-cement siding products have either smooth or textured faces and are intended for exterior wall and related applications.

FIREBLOCKING. Building materials installed to resist the free passage of flame to other areas of the building through concealed spaces.

FIREPLACE. An assembly consisting of a hearth and fire chamber of noncombustible material and provided with a chimney, for use with solid fuels.

Factory-built fireplace. A listed and labeled fireplace and chimney system composed of factory-made components, and assembled in the field in accordance with manufacturer's instructions and the conditions of the listing.

Masonry chimney. A field-constructed chimney composed of solid masonry units, bricks, stones or concrete.

Masonry fireplace. A field-constructed fireplace composed of solid masonry units, bricks, stones or concrete.

FIREPLACE STOVE. A free-standing, chimney-connected solid-fuel-burning heater designed to be operated with the fire chamber doors in either the open or closed position.

FIREPLACE THROAT. The opening between the top of the firebox and the smoke chamber.

FIRE-RETARDANT-TREATED WOOD. Pressure-treated lumber and plywood that exhibit reduced surface burning characteristics and resist propagation of fire.

Other means during manufacture. A process where the wood raw material is treated with a fire-retardant formulation while undergoing creation as a finished product.

Pressure process. A process for treating wood using an initial vacuum followed by the introduction of pressure above atmospheric.

FIRE SEPARATION DISTANCE. The distance measured from the building face to *the* closest interior lot line, *to* the centerline of a street, an alley or public way, or *to* an imaginary line between two buildings on the *property*. The distance shall be measured at a right angle from the face of the wall.

FIXTURE. See "Plumbing fixture."

FIXTURE (OR EQUIPMENT). *Any plumbing, heating, electrical, ventilating, air conditioning, refrigerating and fire protection devices and components of systems other than appliances, and elevators, dumb waiters, and other mechanical facilities or installations that are related to building services.*

FIXTURE BRANCH, DRAINAGE. A drain serving two or more fixtures that discharges into another portion of the drainage system.

FIXTURE BRANCH, WATER-SUPPLY. A water-supply pipe between the fixture supply and a main water-distribution pipe or fixture group main.

FIXTURE DRAIN. The drain from the trap of a fixture to the junction of that drain with any other drain pipe.

FIXTURE FITTING.

Supply fitting. A fitting that controls the volume and/or directional flow of water and is either attached to or accessible from a fixture or is used with an open or atmospheric discharge.

Waste fitting. A combination of components that conveys the sanitary waste from the outlet of a fixture to the connection of the sanitary drainage system.

FIXTURE GROUP, MAIN. The main water-distribution pipe (or secondary branch) serving a plumbing fixture grouping such as a bath, kitchen or laundry area to which two or more individual fixture branch pipes are connected.

FIXTURE SUPPLY. The water-supply pipe connecting a fixture or fixture fitting to a fixture branch.

FIXTURE UNIT, DRAINAGE (d.f.u.). A measure of probable discharge into the drainage system by various types of plumbing fixtures, used to size DWV piping systems. The drainage fixture-unit value for a particular fixture depends on its volume rate of drainage discharge, on the time duration of a single drainage operation and on the average time between successive operations.

FIXTURE UNIT, WATER-SUPPLY (w.s.f.u.). A measure of the probable hydraulic demand on the water supply by various types of plumbing fixtures used to size water-piping systems. The water-supply fixture-unit value for a particular fixture depends on its volume rate of supply, on the time duration of a single supply operation and on the average time between successive operations.

FLAME SPREAD. The propagation of flame over a surface.

FLAME SPREAD INDEX. A comparative measure, expressed as a dimensionless number, derived from visual measurements of the spread of flame versus time for a material tested in accordance with ASTM E 84.

FLIGHT. A continuous run of rectangular treads or winders or combination thereof from one landing to another.

FLOOD-LEVEL RIM. The edge of the receptor or fixture from which water overflows.

FLOOR DRAIN. A plumbing fixture for recess in the floor having a floor-level strainer intended for the purpose of the collection and disposal of waste water used in cleaning the floor and for the collection and disposal of accidental spillage to the floor.

FLOOR FURNACE. A self-contained furnace suspended from the floor of the space being heated, taking air for combustion from outside such space, and with means for lighting the appliance from such space.

FLOW PRESSURE. The static pressure reading in the water-supply pipe near the faucet or water outlet while the faucet or water outlet is open and flowing at capacity.

FLUE. See “Vent.”

FLUE, APPLIANCE. The passages within an appliance through which combustion products pass from the combustion chamber to the flue collar.

FLUE COLLAR. The portion of a fuel-burning appliance designed for the attachment of a draft hood, vent connector or venting system.

FLUE GASES. Products of combustion plus excess air in appliance flues or heat exchangers.

FLUSH VALVE. A device located at the bottom of a flush tank that is operated to flush water closets.

FLUSHOMETER TANK. A device integrated within an air accumulator vessel that is designed to discharge a predetermined quantity of water to fixtures for flushing purposes.

FLUSHOMETER VALVE. A flushometer valve is a device that discharges a predetermined quantity of water to fixtures for flushing purposes and is actuated by direct water pressure.

FOAM BACKER BOARD. Foam plastic used in siding applications where the foam plastic is a component of the siding.

FOAM PLASTIC INSULATION. A plastic that is intentionally expanded by the use of a foaming agent to produce a reduced-density plastic containing voids consisting of open or closed cells distributed throughout the plastic for thermal insulating or acoustic purposes and that has a density less than 20 pounds per cubic foot (320 kg/m3) unless it is used as interior trim.

FOAM PLASTIC INTERIOR TRIM. Exposed foam plastic used as picture molds, chair rails, crown moldings, baseboards, handrails, ceiling beams, door trim and window trim and similar decorative or protective materials used in fixed applications.

FUEL-PIPING SYSTEM. All piping, tubing, valves and fittings used to connect fuel utilization equipment to the point of fuel delivery.

FUEL TANK. *A tank containing fuel for an engine(s) or appliance.*

FULLWAY VALVE. A valve that in the full open position has an opening cross-sectional area equal to a minimum of 85 percent of the cross-sectional area of the connecting pipe.

FURNACE. *A completely self-contained heating unit that is designed to supply heated air to spaces remote from or adjacent to the appliance location.*

GLAZING AREA. The interior surface area of all glazed fenestration, including the area of sash, curbing or other framing elements, that enclose conditioned space. Includes the area of glazed fenestration assemblies in walls bounding conditioned basements.

GRADE. The finished ground level adjoining the building at all exterior walls.

GRADE FLOOR OPENING. A window or other opening located such that the sill height of the opening is not more than 44 inches (1118 mm) above or below the finished ground level adjacent to the opening.

GRADE, PIPING. See “Slope.”

GRADE PLANE. A reference plane representing the average of the finished ground level adjoining the building at all exterior walls. Where the finished ground level slopes away from the exterior walls, the reference plane shall be established by the lowest points within the area between the building and the lot line or, where the lot line is more than 6 ft (1829 mm) from the building between the structure and a point 6 ft (1829 mm) from the building.

GRIDDED WATER DISTRIBUTION SYSTEM. A water distribution system where every water distribution pipe is interconnected so as to provide two or more paths to each fixture supply pipe.

GROSS AREA OF EXTERIOR WALLS. The normal projection of all exterior walls, including the area of all windows and doors installed therein.

GROUND-SOURCE HEAT PUMP LOOP SYSTEM. Piping buried in horizontal or vertical excavations or placed in a body of water for the purpose of transporting heat transfer liquid to and from a heat pump. Included in this definition are closed loop systems in which the liquid is recirculated and open loop systems in which the liquid is drawn from a well or other source.

GUARD. A building component or a system of building components located near the open sides of elevated walking surfaces that minimizes the possibility of a fall from the walking surface to the lower level.

HABITABLE SPACE. A space in a building for living, sleeping, eating or cooking. Bathrooms, toilet rooms, closets, halls, storage or utility spaces and similar areas are not considered habitable spaces.

HANDRAIL. A horizontal or sloping rail intended for grasping by the hand for guidance or support.

HANGERS. See “Supports.”

HAZARDOUS LOCATION. Any location considered to be a fire hazard for flammable vapors, dust, combustible fibers or other highly combustible substances.

HEAT PUMP. An appliance having heating or heating/cooling capability and that uses refrigerants to extract heat from air, liquid or other sources.

HEATING DEGREE DAYS (HDD). The sum, on an annual basis, of the difference between 65°F (18°C) and the mean temperature for each day as determined from "NOAA Annual Degree Days to Selected Bases Derived from the 1960-1990 Normals" or other weather data sources acceptable to the *building* official.

HEIGHT, BUILDING. The vertical distance from grade plane to the average height of the highest roof surface.

HEIGHT, STORY. The vertical distance from top to top of two successive tiers of beams or finished floor surfaces; and, for the topmost story, from the top of the floor finish to the top of the ceiling joists or, where there is not a ceiling, to the top of the roof rafters.

HIGH-EFFICACY LAMPS. Compact fluorescent lamps, T-8 or smaller diameter linear fluorescent lamps or lamps with a minimum efficacy of:

1. 60 lumens per watt for lamps over 40 watts.

2. 50 lumens per watt for lamps over 15 watts to 40 watts.

3. 40 lumens per watt for lamps 15 watts or less.

HIGH-TEMPERATURE (H.T.) CHIMNEY. A high temperature chimney complying with the requirements of UL 103. A Type H.T. chimney is identifiable by the markings "Type H.T." on each chimney pipe section.

HILL. With respect to topographic wind effects, a land surface characterized by strong relief in any horizontal direction.

HISTORIC BUILDING. *A residential building meeting one of the following criteria:*

1. *Listed or preliminarily determined to be eligible for listing in the "National Register of Historic Places"; or*

2. *Determined by the secretary of the U.S. department of interior as contributing to the historical significance of a registered historic district or a district preliminarily determined to qualify as an historic district; or*

3. *Designated as historic under a state or local historic preservation program that is approved by the U.S. department of interior.*

HORIZONTAL BRANCH, DRAINAGE. A drain pipe extending laterally from a soil or waste stack or building drain, that receives the discharge from one or more fixture drains.

HORIZONTAL PIPE. Any pipe or fitting that makes an angle of less than 45 degrees (0.79 rad) with the horizontal.

HOT WATER. Water at a temperature greater than or equal to 110°F (43°C).

HURRICANE-PRONE REGIONS. *Deleted.*

HYDROGEN GENERATING APPLIANCE. A self-contained package or factory-matched packages of integrated systems for generating gaseous hydrogen. Hydrogen generating appliances utilize electrolysis, reformation, chemical, or other processes to generate hydrogen.

IGNITION SOURCE. A flame, spark or hot surface capable of igniting flammable vapors or fumes. Such sources include appliance burners, burner ignitions and electrical switching devices.

INDIRECT WASTE PIPE. A waste pipe that discharges into the drainage system through an air gap into a trap, fixture or receptor.

INDIVIDUAL SEWAGE DISPOSAL SYSTEM. A system for disposal of sewage by means of a septic tank or mechanical treatment, designed for use apart from a public sewer to serve a single establishment or building.

INDIVIDUAL VENT. A pipe installed to vent a single-fixture drain that connects with the vent system above or terminates independently outside the building.

INDIVIDUAL WATER SUPPLY. A supply other than an approved public water supply that serves one or more families.

INDUSTRIALIZED UNITS. *Industrialized units are prefabricated components comprised of closed construction manufactured at a location remote from the site of intended use and transported to a building site for its subsequent use. Industrialized units are not restricted to housing for one-, two-, and three-family dwellings, but includes all prefabricated forms of building elements and assembled construction units, intended for both structural and service equipment purposes in all buildings of all groups. Prefabricated shop assemblies may be shipped in structurally complete units ready for installation in the building structure or in knock-down and packaged form for assembly at the site. Industrialized units must be approved by the board in accordance with section 113 of the OBC. Also see definition of CLOSED CONSTRUCTION.*

INSULATING CONCRETE FORM (ICF). A concrete forming system using stay-in-place forms of rigid foam plastic insulation, a hybrid of cement and foam insulation, a hybrid of cement and wood chips, or other insulating material for constructing cast-in-place concrete walls.

INSULATING SHEATHING. An insulating board having a minimum thermal resistance of R-2 of the core material.

JURISDICTION. The *municipality, township or county governmental unit with a residential building department certified by the board of building standards*.

KITCHEN. Kitchen shall mean an area used, or designated to be used, for the preparation of food.

LABEL. An identification applied on a product by the manufacturer which contains the name of the manufacturer, the function and performance characteristics of the product or material, and the name and identification of an approved agency and that indicates that the representative sample of the product or material has been tested and evaluated by an approved agency. (See also “Manufacturer’s designation” and “Mark.”)

LABELED. *Devices, equipment or materials to which have been affixed a label, seal, symbol or other identifying mark of a testing laboratory, inspection agency or other organization concerned with product evaluation that maintains periodic inspection of the production of the above labeled items that attests to compliance with a specific standard.*

LIGHT-FRAME CONSTRUCTION. A type of construction whose vertical and horizontal structural elements are primarily formed by a system of repetitive wood or cold-formed steel framing members.

LISTED AND LISTING. *Terms referring to equipment that is shown in a list published by an approved testing agency qualified and equipped for experimental testing and maintaining an adequate periodic inspection of current productions and whose listing states that the equipment complies with nationally recognized standards when installed in accordance with the manufacturer's installation instructions.*

LIVE LOADS. Those loads produced by the use and occupancy of the building or other structure and do not include construction or environmental loads such as wind load, snow load, rain load, earthquake load, flood load or dead load.

LIVING SPACE. Space within a dwelling unit utilized for living, sleeping, eating, cooking, bathing, washing and sanitation purposes.

LOAD-BEARING ELEMENT. *Any column, girder, beam, joist, truss, rafter, wall, floor or roof sheathing that supports any vertical load in addition to its own weight, and/or any lateral load.*

LOT. A portion or parcel of land considered as a unit.

LOT LINE. A line dividing one lot from another, or from a street or any public place.

MACERATING TOILET SYSTEMS. A system comprised of a sump with macerating pump and with connections for a water closet and other plumbing fixtures, that is designed to accept, grind and pump wastes to an approved point of discharge.

MAIN. The principal pipe artery to which branches may be connected.

MAIN SEWER. See "Public sewer."

MANIFOLD WATER DISTRIBUTION SYSTEMS. A fabricated piping arrangement in which a large supply main is fitted with multiple branches in close proximity in which water is distributed separately to fixtures from each branch.

MANUFACTURED HOME. *A dwelling constructed under "24 CFR Part 3280," "Manufactured Home Construction and Safety Standards". [Note: Typically, a "Manufactured Home" will be constructed on a steel chassis and have a small (approximately 1-½" x 3") metal plate with inscribed HUD regulation reference numbers attached to the exterior end wall of the unit.]*

MANUFACTURER'S DESIGNATION. An identification applied on a product by the manufacturer indicating that a product or material complies with a specified standard or set of rules. (See also "Mark" and "Label.")

MANUFACTURER'S INSTALLATION INSTRUCTIONS. Printed instructions included with equipment as part of the conditions of listing and labeling.

MARK. An identification applied on a product by the manufacturer indicating the name of the manufacturer and the function of a product or material. (See also "Manufacturer's designation" and "Label.")

MASONRY CHIMNEY. A field-constructed chimney composed of solid masonry units, bricks, stones or concrete.

MASONRY HEATER. A masonry heater is a solid fuel burning heating appliance constructed predominantly of concrete or solid masonry having a mass of at least 1,100 pounds (500 kg), excluding the chimney and foundation. It is designed to absorb and store a substantial portion of heat from a fire built in the firebox by routing exhaust gases through internal heat exchange channels in which the flow path downstream of the firebox includes at least one 180-degree (3.14-rad) change in flow direction before entering the chimney and which deliver heat by radiation through the masonry surface of the heater.

MASONRY, SOLID. Masonry consisting of solid masonry units laid contiguously with the joints between the units filled with mortar.

MASONRY UNIT. Brick, tile, stone, glass block or concrete block conforming to the requirements specified in Section 2103 of the *Ohio* Building Code.

Clay. A building unit larger in size than a brick, composed of burned clay, shale, fire clay or mixtures thereof.

Concrete. A building unit or block larger in size than 12 inches by 4 inches by 4 inches (305 mm by 102 mm by 102 mm) made of cement and suitable aggregates.

Glass. Nonload-bearing masonry composed of glass units bonded by mortar.

Hollow. A masonry unit whose net cross-sectional area in any plane parallel to the loadbearing surface is less than 75 percent of its gross cross-sectional area measured in the same plane.

Solid. A masonry unit whose net cross-sectional area in every plane parallel to the loadbearing surface is 75 percent or more of its cross-sectional area measured in the same plane.

MASS WALL. Masonry or concrete walls having a mass greater than or equal to 30 pounds per square foot (146 kg/m^2), solid wood walls having a mass greater than or equal to 20 pounds per square foot (98 kg/m^2), and any other walls having a heat capacity greater than or equal to 6 $Btu/ft^2 \cdot °F$ [266 $J/(m^2 \cdot K)$].

MEAN ROOF HEIGHT. The average of the roof eave height and the height to the highest point on the roof surface, except that eave height shall be used for roof angle of less than or equal to 10 degrees (0.18 rad).

MECHANICAL DRAFT SYSTEM. A venting system designed to remove flue or vent gases by mechanical means, that consists of an induced draft portion under nonpositive static pressure or a forced draft portion under positive static pressure.

Forced-draft venting system. A portion of a venting system using a fan or other mechanical means to cause the removal of flue or vent gases under positive static pressure.

Induced draft venting system. A portion of a venting system using a fan or other mechanical means to cause the removal of flue or vent gases under nonpositive static vent pressure.

Power venting system. A portion of a venting system using a fan or other mechanical means to cause the removal of flue or vent gases under positive static vent pressure.

MECHANICAL EXHAUST SYSTEM. A system for removing air from a room or space by mechanical means.

MECHANICAL SYSTEM. A system specifically addressed and regulated in this code and composed of components, devices, appliances and equipment.

METAL ROOF PANEL. An interlocking metal sheet having a minimum installed weather exposure of at least 3 square feet (0.28 m2) per sheet.

METAL ROOF SHINGLE. An interlocking metal sheet having an installed weather exposure less than 3 square feet (0.28 m2) per sheet.

MEZZANINE, LOFT. An intermediate level or levels between the floor and ceiling of any story with an aggregate floor area of not more than one-third of the area of the room or space in which the level or levels are located.

MINOR REPAIR. See **"**Repair, Minor**".**

MODIFIED BITUMEN ROOF COVERING. One or more layers of polymer modified asphalt sheets. The sheet materials shall be fully adhered or mechanically attached to the substrate or held in place with an approved ballast layer.

MULTIPLE STATION SMOKE ALARM. Two or more single station alarm devices that are capable of interconnection such that actuation of one causes all integral or separate audible alarms to operate.

NATURAL DRAFT SYSTEM. A venting system designed to remove flue or vent gases under nonpositive static vent pressure entirely by natural draft.

NATURALLY DURABLE WOOD. The heartwood of the following species with the exception that an occasional piece with corner sapwood is permitted if 90 percent or more of the width of each side on which it occurs is heartwood.

Decay resistant. Redwood, cedar, black locust and black walnut.

Termite resistant. Alaska yellow cedar, redwood, Eastern red cedar and Western red cedar including all sapwood of Western red cedar.

NONCOMBUSTIBLE MATERIAL. Materials that pass the test procedure for defining noncombustibility of elementary materials set forth in ASTM E 136.

NONCONDITIONED SPACE. A space that is not a conditioned space by insulated walls, floors or ceilings.

NOSING. The leading edge of treads of stairs and of landings at the top of stairway flights.

OCCUPIED SPACE. The total area of all buildings or structures on any lot or parcel of ground projected on a horizontal plane, excluding permitted projections as allowed by this code.

OFFSET. A combination of fittings that makes two changes in direction bringing one section of the pipe out of line but into a line parallel with the other section.

OWNER. Any person, agent, firm or corporation having a legal or equitable interest in the property.

PANEL THICKNESS. Thickness of core plus two layers of structural wood panel facings.

PELLET FUEL-BURNING APPLIANCE. A closed combustion, vented appliance equipped with a fuel feed mechanism for burning processed pellets of solid fuel of a specified size and composition.

PELLET VENT. A vent listed and labeled for use with a listed pellet fuel-burning appliance.

PERMIT. An *approval indicated in an* official document or certificate issued by the *residential building official* that authorizes performance of a specified activity. *Also see "APPROVED"*.

PERSON. An individual, heirs, executors, administrators or assigns, and also includes a firm, partnership or corporation, its or their successors or assigns, or the agent of any of the aforesaid.

PITCH. See "Slope."

PLATFORM CONSTRUCTION. A method of construction by which floor framing bears on load bearing walls that are not continuous through the story levels or floor framing.

PLENUM. A chamber that forms part of an air-circulation system other than the occupied space being conditioned.

PLUMBING. *The practice, materials and fixtures utilized in the installation, maintenance, extension and alteration of all piping, fixtures, appliances and appurtenances within or adjacent to any structure, in connection with sanitary drainage or storm drainage facilities; venting systems; and public or private water supply systems.*

PLUMBING APPLIANCE. An energized household appliance with plumbing connections, such as a dishwasher, food-waste grinder, clothes washer or water heater.

PLUMBING APPURTENANCE. A device or assembly that is an adjunct to the basic plumbing system and demands no additional water supply nor adds any discharge load to the system. It is presumed that it performs some useful function in the operation, maintenance, servicing, economy or safety of the plumbing system. Examples include filters, relief valves and aerators.

PLUMBING FIXTURE. A receptor or device that requires both a water-supply connection and a discharge to the drainage system, such as water closets, lavatories, bathtubs and sinks. Plumbing appliances as a special class of fixture are further defined.

PLUMBING SYSTEM. Includes the water supply and distribution pipes, plumbing fixtures, supports and appurtenances; soil, waste and vent pipes; sanitary drains and building sewers to an approved point of disposal.

POLLUTION. An impairment of the quality of the potable water to a degree that does not create a hazard to the public health but that does adversely and unreasonably affect the aesthetic qualities of such potable water for domestic use.

PORTABLE-FUEL-CELL APPLIANCE. A fuel cell generator of electricity, which is not fixed in place. A portable-fuel-cell appliance utilizes a cord and plug connection to a grid-isolated load and has an integral fuel supply.

POSITIVE ROOF DRAINAGE. The drainage condition in which consideration has been made for all loading deflections of the roof deck, and additional slope has been provided to ensure drainage of the roof within 48 hours of precipitation.

POTABLE WATER. Water free from impurities present in amounts sufficient to cause disease or harmful physiological effects and conforming in bacteriological and chemical quality to the requirements of the public health authority having jurisdiction.

PRECAST CONCRETE. A structural concrete element cast elsewhere than its final position in the structure.

PRECAST CONCRETE FOUNDATION WALLS. Preengineered, precast concrete wall panels that are designed to withstand specified stresses and used to build below-grade foundations.

PRESSURE-RELIEF VALVE. A pressure-actuated valve held closed by a spring or other means and designed to automatically relieve pressure at the pressure at which it is set.

PUBLIC SEWER. A common sewer directly controlled by public authority.

PUBLIC WATER MAIN. A water-supply pipe for public use controlled by public authority.

PUBLIC WAY. Any street, alley or other parcel of land open to the outside air leading to a public street, which has been deeded, dedicated or otherwise permanently appropriated to the public for public use and that has a clear width and height of not less than 10 feet (3048 mm).

PURGE. To clear of air, gas or other foreign substances.

QUICK-CLOSING VALVE. A valve or faucet that closes automatically when released manually or controlled by mechanical means for fast-action closing.

***R*-VALUE, THERMAL RESISTANCE.** The inverse of the time rate of heat flow through a building thermal envelope element from one of its bounding surfaces to the other for a unit temperature difference between the two surfaces, under steady state conditions, per unit area ($h \cdot ft^2 \cdot °F/Btu$).

RAMP. A walking surface that has a running slope steeper than 1 unit vertical in 20 units horizontal (5-percent slope).

RECEPTOR. A fixture or device that receives the discharge from indirect waste pipes.

REFRIGERANT. A substance used to produce refrigeration by its expansion or evaporation.

REFRIGERANT COMPRESSOR. A specific machine, with or without accessories, for compressing a given refrigerant vapor.

REFRIGERATING SYSTEM. A combination of interconnected parts forming a closed circuit in which refrigerant is circulated for the purpose of extracting, then rejecting, heat. A direct refrigerating system is one in which the evaporator or condenser of the refrigerating system is in direct contact with the air or other substances to be cooled or heated. An indirect refrigerating system is one in which a secondary coolant cooled or heated by the refrigerating system is circulated to the air or other substance to be cooled or heated.

REGISTERED DESIGN PROFESSIONAL. *Any architect holding a certificate issued under sections 4703.10 and 4703.36 of the Revised Code or any engineer holding a certificate issued under section 4733.14 of the Revised Code.*

RELIEF VALVE, VACUUM. A valve that automatically opens and closes a vent for relieving a vacuum within the hot water supply system, depending on whether the vacuum is above or below a predetermined value.

REPAIR. The reconstruction or renewal of any part of an existing building for the purpose of its maintenance.

REPAIR, MINOR. *The reconstruction or renewal of any part of an existing building for the purpose of its maintenance when the work has limited impact on access, safety or health. Minor repairs do not include the cutting away of any wall, partition or portions of walls, the removal or cutting of any structural beam or load bearing support, or the removal or change of any required element of accessibility, means of egress, or rearrangement of parts of a structure affecting the egress requirements. Minor repairs do not include addition to, alteration of, replacement or relocation of any standpipe, water supply, sewer, drainage, drain leader, gas, soil, waste, vent or similar piping, electric wiring or mechanical or fire protection equipment.*

REROOFING. The process of recovering or replacing an existing roof covering. See "Roof recover."

RESIDENTIAL BUILDING. *A one-family, two-family, or three-family dwelling house, and any accessory structure incidental to that dwelling house. "Residential building" includes a one-family, two-family, or three-family dwelling house that is used as a model to promote the sale of a similar dwelling house. "Residential building" does not include an industrialized unit as defined*

by division (C)(3) of Section 3781.06 of the Revised Code, a manufactured home as defined by division (C)(4) of Section 3781.06 of the Revised Code, or a mobile home as defined by division (O) of Section 4501.01 of the Revised Code.

RESIDENTIAL BUILDING OFFICIAL. *An individual who has received and maintains a certification of "Residential Building Official" in accordance with rules of the board of building standards.*

RETURN AIR. Air removed from an approved conditioned space or location and recirculated or exhausted.

RIDGE. With respect to topographic wind effects, an elongated crest of a hill characterized by strong relief in two directions.

RISER. A water pipe that extends vertically one full story or more to convey water to branches or to a group of fixtures.

ROOF ASSEMBLY. A system designed to provide weather protection and resistance to design loads. The system consists of a roof covering and roof deck or a single component serving as both the roof covering and the roof deck. A roof assembly includes the roof deck, vapor retarder, substrate or thermal barrier, insulation, vapor retarder, and roof covering.

ROOF COVERING. The covering applied to the roof deck for weather resistance, fire classification or appearance.

ROOF COVERING SYSTEM. See "Roof assembly."

ROOF DECK. The flat or sloped surface not including its supporting members or vertical supports.

ROOF RECOVER. The process of installing an additional roof covering over a prepared existing roof covering without removing the existing roof covering.

ROOF REPAIR. Reconstruction or renewal of any part of an existing roof for the purposes of its maintenance.

ROOFTOP STRUCTURE. An enclosed structure on or above the roof of any part of a building.

ROOM HEATER. A freestanding heating appliance installed in the space being heated and not connected to ducts.

ROUGH-IN. The installation of all parts of the plumbing system that must be completed prior to the installation of fixtures. This includes DWV, water supply and built-in fixture supports.

RUNNING BOND. The placement of masonry units such that head joints in successive courses are horizontally offset at least one-quarter the unit length.

SAFE. *As applied to a building, means free from danger or hazard to the life, safety, health or welfare of persons occupying or frequenting it, or of the public, and from danger of settlement, movement, disintegration, or collapse, whether such danger arises from the method or materials of its construction or from equipment installed therein, for the purpose of lighting, heating, the transmission or utilization of electric current, or from its location or otherwise.*

SANITARY. *As applied to a building, means free from danger or hazard to the health of persons occupying or frequenting it or to that of the public, if such danger arises from the method or materials of its construction or from any equipment installed therein for the purpose of lighting, heating, ventilating, or plumbing.*

SANITARY SEWER. A sewer that carries sewage and excludes storm, surface and groundwater.

SCUPPER. An opening in a wall or parapet that allows water to drain from a roof.

SEISMIC DESIGN CATEGORY (SDC). A classification assigned to a structure based on its occupancy category and the severity of the design earthquake ground motion at the site.

SEPTIC TANK. A water-tight receptor that receives the discharge of a building sanitary drainage system and is constructed so as to separate solids from the liquid, digest organic matter through a period of detention, and allow the liquids to discharge into the soil outside of the tank through a system of open joint or perforated piping or a seepage pit.

SERIOUS HAZARD. *A hazard of considerable consequence to safety or health through the design, location, construction, or equipment of a building, or the*

condition thereof, which hazard has been established through experience to be of certain or probable consequence, or which can be determined to be, or which is obviously such a hazard.

SEWAGE. Any liquid waste containing animal matter, vegetable matter or other impurity in suspension or solution.

SEWAGE PUMP. A permanently installed mechanical device for removing sewage or liquid waste from a sump.

SHALL. The term, when used in the code, is construed as mandatory.

SHEAR WALL. A general term for walls that are designed and constructed to resist racking from seismic and wind by use of masonry, concrete, cold-formed steel or wood framing in accordance with Chapter 6 of this code and the *applicable* limitations in Section 301.2 of this code.

SIDE VENT. A vent connecting to the drain pipe through a fitting at an angle less than 45 degrees (0.79 rad) to the horizontal.

SINGLE PLY MEMBRANE. A roofing membrane that is field applied using one layer of membrane material (either homogeneous or composite) rather than multiple layers.

SINGLE STATION SMOKE ALARM. An assembly incorporating the detector, control equipment and alarm sounding device in one unit that is operated from a power supply either in the unit or obtained at the point of installation.

SKYLIGHT AND SLOPED GLAZING. See Section 308.6.1.

SKYLIGHT, UNIT. See Section 308.6.1.

SLIP JOINT. A mechanical-type joint used primarily on fixture traps. The joint tightness is obtained by compressing a friction-type washer such as rubber, nylon, neoprene, lead or special packing material against the pipe by the tightening of a (slip) nut.

SLOPE. The fall (pitch) of a line of pipe in reference to a horizontal plane. In drainage, the slope is expressed as the fall in units vertical per units horizontal (percent) for a length of pipe.

SMOKE-DEVELOPED INDEX. A comparative measure, expressed as a dimensionless number, derived from measurements of smoke obscuration versus time for a material tested in accordance with ASTM E 84.

SOIL STACK OR PIPE. A pipe that conveys sewage containing fecal material.

SOLAR HEAT GAIN COEFFICIENT (SHGC). The solar heat gain through a fenestration or glazing assembly relative to the incident solar radiation (Btu/h· ft^2· °F).

SOLID MASONRY. Load-bearing or nonload-bearing construction using masonry units where the net cross-sectional area of each unit in any plane parallel to the bearing surface is not less than 75 percent of its gross cross-sectional area. Solid masonry units shall conform to ASTM C 55, C 62, C 73, C 145 or C 216.

SPLINE. A strip of wood structural panel cut from the same material used for the panel facings, used to connect two structural insulated panels. The strip (spline) fits into a groove cut into the vertical edges of the two structural insulated panels to be joined. Splines are used behind each facing of the structural insulated panels being connected as shown in Figure 613.8.

STACK. Any main vertical DWV line, including offsets, that extends one or more stories as directly as possible to its vent terminal.

STACK BOND. The placement of masonry units in a bond pattern is such that head joints in successive courses are vertically aligned. For the purpose of this code, requirements for stack bond shall apply to all masonry laid in other than running bond.

STACK VENT. The extension of soil or waste stack above the highest horizontal drain connected.

STACK VENTING. A method of venting a fixture or fixtures through the soil or waste stack without individual fixture vents.

STAIR. A change in elevation, consisting of one or more risers.

STAIRWAY. One or more flights of stairs, either interior or exterior, with the necessary landings and platforms connecting them to form a continuous and uninterrupted passage from one level to another within or attached to a building, porch or deck.

STANDARD TRUSS. Any construction that does not permit the roof/ceiling insulation to achieve the required R-value over the exterior walls.

STATIONARY FUEL CELL POWER PLANT. A self-contained package or factory-matched packages which constitute an automatically-operated assembly of integrated systems for generating useful electrical energy and recoverable thermal energy that is permanently connected and fixed in place.

STORM SEWER, DRAIN. A pipe used for conveying rainwater, surface water, subsurface water and similar liquid waste.

STORY. That portion of a building included between the upper surface of a floor and the upper surface of the floor or roof next above.

STORY ABOVE GRADE PLANE. Any story having its finished floor surface entirely above grade plane, except that a basement shall be considered as a story above grade plane where the finished surface of the floor above the basement meets any one of the following:

1. Is more than 6 feet (1829 mm) above grade plane.

2. Is more than 6 feet (1829 mm) above the finished ground level for more than 50 percent of the total building perimeter.

3. Is more than 12 feet (3658 mm) above the finished ground level at any point.

STRUCTURAL INSULATED PANEL (SIP). A structural sandwich panel that consists of a light-weight foam plastic core securely laminated between two thin, rigid wood structural panel facings.

STRUCTURE. That which is built or constructed.

SUBSOIL DRAIN. A drain that collects subsurface water or seepage water and conveys such water to a place of disposal.

SUMP. A tank or pit that receives sewage or waste, located below the normal grade of the gravity system and that must be emptied by mechanical means.

SUMP PUMP. A pump installed to empty a sump. These pumps are used for removing storm water only. The pump is selected for the specific head and volume of the load and is usually operated by level controllers.

SUNROOM. A one-story structure attached to a dwelling with a glazing area in excess of 40 percent of the gross area of the structure's exterior walls and roof.

SUPPLY AIR. Air delivered to a conditioned space through ducts or plenums from the heat exchanger of a heating, cooling or ventilating system.

SUPPORTS. Devices for supporting, hanging and securing pipes, fixtures and equipment.

SWEEP. A drainage fitting designed to provide a change in direction of a drain pipe of less than the angle specified by the amount necessary to establish the desired slope of the line. Sweeps provide a longer turning radius than bends and a less turbulent flow pattern (see "Bend" and "Elbow").

TEMPERATURE-AND-PRESSURE-RELIEF (T AND P) VALVE. A combination relief valve designed to function as both a temperature-relief and pressure-relief valve.

TEMPERATURE-RELIEF VALVE. A temperature-actuated valve designed to discharge automatically at the temperature at which it is set.

TERMITE-RESISTANT MATERIAL. Pressure-preservative treated wood in accordance with the AWPA standards in Section 318.1, naturally durable termite-resistant wood, steel, concrete, masonry or other approved material.

THERMAL ISOLATION. Physical and space conditioning separation from conditioned space(s) consisting of existing or new walls, doors and/or windows. The conditioned space(s) shall be controlled as separate zones for heating and cooling or conditioned by separate equipment.

THERMAL RESISTANCE, R-VALUE. The inverse of the time rate of heat flow through a body from one of its bounding surfaces to the other for a unit temperature difference between the two surfaces, under steady state conditions, per unit area ($h \cdot ft^2 \cdot °F/Btu$).

THERMAL TRANSMITTANCE, U-FACTOR. The coefficient of heat transmission (air to air) through a building envelope component or assembly,

equal to the time rate of heat flow per unit area and unit temperature difference between the warm side and cold side air films (Btu/h· ft^2· °F).

TOWNHOUSE. A single-family dwelling unit constructed in a group of three or more attached units in which each unit extends from foundation to roof.

TRAP. A fitting, either separate or built into a fixture, that provides a liquid seal to prevent the emission of sewer gases without materially affecting the flow of sewage or waste water through it.

TRAP ARM. That portion of a fixture drain between a trap weir and the vent fitting.

TRAP PRIMER. A device or system of piping to maintain a water seal in a trap, typically installed where infrequent use of the trap would result in evaporation of the trap seal, such as floor drains.

TRAP SEAL. The trap seal is the maximum vertical depth of liquid that a trap will retain, measured between the crown weir and the top of the dip of the trap.

TRIM. Picture molds, chair rails, baseboards, handrails, door and window frames, and similar decorative or protective materials used in fixed applications.

TRUSS DESIGN DRAWING. The graphic depiction of an individual truss, which describes the design and physical characteristics of the truss.

TYPE L VENT. A listed and labeled vent conforming to UL 641 for venting oil-burning appliances listed for use with Type L vents or with gas appliances listed for use with Type B vents.

U-FACTOR, THERMAL TRANSMITTANCE. The coefficient of heat transmission (air to air) through a building envelope component or assembly, equal to the time rate of heat flow per unit area and unit temperature difference between the warm side and cold side air films (Btu/h· ft^2· °F).

UNDERLAYMENT. One or more layers of felt, sheathing paper, nonbituminous saturated felt, or other approved material over which a roof covering, with a slope of 2 to 12 (17-percent slope) or greater, is applied.

VACUUM BREAKERS. A device which prevents backsiphonage of water by admitting atmospheric pressure through ports to the discharge side of the device.

VAPOR PERMEABLE MEMBRANE. A material or covering having a permeance rating of 5 perms ($2.9 \cdot 10^{-10}$ kg/Pa· s· m^2) or greater, when tested in accordance with the desiccant method using Procedure A of ASTM E 96. A vapor permeable material permits the passage of moisture vapor.

VAPOR RETARDER CLASS. A measure of the ability of a material or assembly to limit the amount of moisture that passes through that material or assembly. Vapor retarder class shall be defined using the desiccant method with Procedure A of ASTM E 96 as follows:

Class I: 0.1 perm or less

Class II: 0.1 < perm ≤ 1.0 perm

Class III: 1.0 < perm ≤ 10 perm

VEHICULAR ACCESS DOOR. A door that is used primarily for vehicular traffic at entrances of buildings such as garages and parking lots, and that is not generally used for pedestrian traffic.

VENT. A passageway for conveying flue gases from fuel-fired appliances, or their vent connectors, to the outside atmosphere.

VENT COLLAR. See “Flue collar.”

VENT CONNECTOR. That portion of a venting system which connects the flue collar or draft hood of an appliance to a vent.

VENT DAMPER DEVICE, AUTOMATIC. A device intended for installation in the venting system, in the outlet of an individual, automatically operated fuel burning appliance and that is designed to open the venting system automatically when the appliance is in operation and to close off the venting system automatically when the appliance is in a standby or shutdown condition.

VENT GASES. Products of combustion from fuel-burning appliances, plus excess air and dilution air, in the venting system above the draft hood or draft regulator.

VENT STACK. A vertical vent pipe installed to provide circulation of air to and from the drainage system and which extends through one or more stories.

VENT SYSTEM. Piping installed to equalize pneumatic pressure in a drainage system to prevent trap seal loss or blow-back due to siphonage or back pressure.

VENTILATION. The natural or mechanical process of supplying conditioned or unconditioned air to, or removing such air from, any space.

VENTING. Removal of combustion products to the outdoors.

VENTING SYSTEM. A continuous open passageway from the flue collar of an appliance to the outside atmosphere for the purpose of removing flue or vent gases. A venting system is usually composed of a vent or a chimney and vent connector, if used, assembled to form the open passageway.

VERTICAL PIPE. Any pipe or fitting that makes an angle of 45 degrees (0.79 rad) or more with the horizontal.

VINYL SIDING. A shaped material, made principally from rigid polyvinyl chloride (PVC), that is used to cover exterior walls of buildings.

WALL, RETAINING. A wall not laterally supported at the top, that resists lateral soil load and other imposed loads.

WALLS. Walls shall be defined as follows:

Load-bearing wall is a wall supporting any vertical load in addition to its own weight.

Nonbearing wall is a wall which does not support vertical loads other than its own weight.

WASTE. Liquid-borne waste that is free of fecal matter.

WASTE PIPE OR STACK. Piping that conveys only liquid sewage not containing fecal material.

WATER-DISTRIBUTION SYSTEM. Piping which conveys water from the service to the plumbing fixtures, appliances, appurtenances, equipment, devices or other systems served, including fittings and control valves.

WATER HEATER. Any heating appliance or equipment that heats potable water and supplies such water to the potable hot water distribution system.

WATER MAIN. A water-supply pipe for public use.

WATER OUTLET. A valved discharge opening, including a hose bibb, through which water is removed from the potable water system supplying water to a plumbing fixture or plumbing appliance that requires either an air gap or backflow prevention device for protection of the supply system.

WATER-RESISTIVE BARRIER. A material behind an exterior wall covering that is intended to resist liquid water that has penetrated behind the exterior covering from further intruding into the exterior wall assembly.

WATER-SERVICE PIPE. The outside pipe from the water main or other source of potable water supply to the water-distribution system inside the building, terminating at the service valve.

WATER-SUPPLY SYSTEM. The water-service pipe, the water-distributing pipes and the necessary connecting pipes, fittings, control valves and all appurtenances in or adjacent to the building or premises.

WEATHER-RESISTIVE. Protection of exterior wall and roof assemblies of a building providing resistance to wind, precipitation and other weather conditions.

WET VENT. A vent that also receives the discharge of wastes from other fixtures.

WIND-BORNE DEBRIS REGION. *Deleted.*

WINDER. A tread with nonparallel edges.

WOOD/PLASTIC COMPOSITE. A composite material made primarily from wood or cellulose-based materials and plastic.

WOOD STRUCTURAL PANEL. A panel manufactured from veneers; or wood strands or wafers; bonded together with waterproof synthetic resins or other suitable bonding systems. Examples of wood structural panels are plywood, OSB or composite panels.

YARD. An open space, other than a court, unobstructed from the ground to the sky, except where specifically provided by this code, on the lot on which a building is situated.

4101:8-3-01 Building planning.

[Comment: When a reference is made within this rule to a federal statutory provision, an industry consensus standard, or any other technical publication, the specific date and title of the publication as well as the name and address of the promulgating agency are listed in rule 4101:8-44-01 of the Administrative Code. The application of the referenced standards shall be limited and as prescribed in section 102.5 of rule 4101:8-1-01 of the Administrative Code.]

SECTION 301
DESIGN CRITERIA

301.1 Application. Buildings and structures, and all parts thereof, shall be constructed to safely support all loads, including dead loads, live loads, roof loads, flood loads, snow loads, wind loads and seismic loads as prescribed by this code. The construction of buildings and structures in accordance with the provisions of this code shall result in a system that provides a complete load path that meets all requirements for the transfer of all loads from their point of origin through the load-resisting elements to the foundation. Buildings and structures constructed as prescribed by this code are deemed to comply with the requirements of this section.

301.1.1 Alternative provisions. As an alternative to the requirements in Section 301.1 the following standards are permitted subject to the limitations of this code and the limitations therein. Where engineered design is used in conjunction with these standards, the design shall comply with the *Ohio* Building Code.

1. American Forest and Paper Association (AF&PA) Wood Frame Construction Manual (WFCM).

2. American Iron and Steel Institute (AISI) Standard for Cold-Formed Steel Framing—Prescriptive Method for One- and Two-Family Dwellings (AISI S230).

3. ICC-400 Standard on the Design and Construction of Log Structures.

301.1.2 Construction systems. The requirements of this code are based on platform and balloon-frame construction for light-frame buildings. The requirements for concrete and masonry buildings are based on a balloon

framing system. Other systems must have equivalent detailing to ensure force transfer, continuity and compatible deformations.

301.1.3 Engineered design. When a building of otherwise conventional construction contains structural elements exceeding the limits of Section 301 or otherwise not conforming to this code, these elements shall be designed in accordance with accepted engineering practice. The extent of such design need only demonstrate compliance of nonconventional elements with other applicable provisions and shall be compatible with the performance of the conventional framed system. Engineered design in accordance with the *Ohio* Building Code is permitted for all buildings and structures, and parts thereof, included in the scope of this code.

301.2 Climatic and geographic design criteria. Buildings shall be constructed in accordance with the provisions of this code as limited by the provisions of this section. Additional criteria shall be established by the local jurisdiction and set forth in Table 301.2(1).

301.2.1 Wind limitations. Buildings and portions thereof shall be limited by wind speed, as defined in Table 301.2(1) and construction methods in accordance with this code. Basic wind speeds shall be determined from Figure 301.2(4). Where different construction methods and structural materials are used for various portions of a building, the applicable requirements of this section for each portion shall apply. Where loads for wall coverings, curtain walls, roof coverings, exterior windows, skylights, garage doors and exterior doors are not otherwise specified, the loads listed in Table 301.2(2) adjusted for height and exposure using Table 301.2(3) shall be used to determine design load performance requirements for wall coverings, curtain walls, roof coverings, exterior windows, skylights, garage doors and exterior doors. Asphalt shingles shall be designed for wind speeds in accordance with Section 905.2.6.

301.2.1.1 Design criteria. In regions where the basic wind speeds from Figure 301.2(4) equal or exceed 100 miles per hour (45 m/s) in hurricane-prone regions, or 110 miles per hour (49 m/s) elsewhere, the design of buildings shall be in accordance with one of the following methods. The elements of design not addressed by those documents in Items 1 through 4 shall be in accordance with this code.

1. American Forest and Paper Association (AF&PA) Wood Frame Construction Manual for One-and Two-Family Dwellings (WFCM); or

2. International Code Council (ICC) Standard for Residential Construction in High Wind Regions (ICC-600); or

3. Minimum Design Loads for Buildings and Other Structures (ASCE-7); or

4. American Iron and Steel Institute (AISI), Standard for Cold-Formed Steel Framing—Prescriptive Method For One-and Two-Family Dwellings (AISI S230).

5. Concrete construction shall be designed in accordance with the provisions of this code.

6. Structural insulated panel (SIP) walls shall be designed in accordance with the provisions of this code.

TABLE 301.2(1)
CLIMATIC AND GEOGRAPHIC DESIGN CRITERIA

GROUND SNOW LOAD	WIND DESIGN		SEISMIC DESIGN CATEGORY[f]	SUBJECT TO DAMAGE FROM			WINTER DESIGN TEMP[e]	ICE BARRIER UNDERLAYMENT REQUIRED[h]	FLOOD HAZARDS[g]	AIR FREEZING INDEX[i]	MEAN ANNUAL TEMP[j]
	Speed[d] (mph)	Topographic effects[k]		Weathering[a]	Frost line depth[b]	Termite[c]					
Refer to Figure 301.2(5)	90		A or B per Section 301.2.2.1	Severe		Moderate to Heavy	Refer to table in footnote.	Yes		Refer to Figure 403.3(2) or Table 403.3(2)	

For SI: 1 pound per square foot = 0.0479 kPa, 1 mile per hour = 0.447 m/s.

a. Weathering may require a higher strength concrete or grade of masonry than necessary to satisfy the structural requirements of this code. The grade of masonry units shall be determined from ASTM C 34, C 55, C 62, C 73, C 90, C 129, C 145, C 216 or C 652.

b. The jurisdiction shall fill in the frost line depth column with the minimum depth of footing below finish grade.

c. *I*ndicates the need for protection depending on whether there has been a history of local subterranean termite damage.

d. Wind exposure category shall be determined on a site-specific basis in accordance with Section 301.2.1.4.

e. The outdoor design dry-bulb temperature *shall be determined from the following table:*

STATION	*HEATING DEGREE DAYS (Yearly Total)*	*DESIGN TEMPERATURES*	*DEGREES NORTH LATITUDE*
Akron-Canton	*6,037*	*6º*	*41º00'*
Cincinnati	*4,410*	*6º*	*39º10'*
Cleveland	*6,351*	*5º*	*41º20'*
Columbus	*5,660*	*5º*	*41º00'*
Dayton	*5,622*	*4º*	*39º50'*
Mansfield	*6,403*	*5º*	*41º50'*
Sandusky	*5,796*	*6º*	*41º30'*

Toledo	*6,494*	*1º*	*41º40'*
Youngstown	*6,417*	*4º*	*41º20'*

from the *tabulated* temperatures shall be permitted to reflect local climates or local weather experience as *documented* by the building official.

f. *T*he seismic design category *shall be* determined from Section 301.2.2.1.

g. The jurisdiction shall fill in this part of the table with (a) the date of the jurisdiction's entry into the National Flood Insurance Program (date of adoption of the first code or ordinance for management of flood hazard areas), (b) the date(s) of the Flood Insurance Study and (c) the panel numbers and dates of all currently effective FIRMs and FBFMs or other flood hazard map adopted by the authority having jurisdiction, as amended.

h. In accordance with Sections 905.2.7.1, 905.4.3.1, 905.5.3.1, 905.6.3.1, 905.7.3.1 and 905.8.3.1.

i. *T*he air freezing index *shall also be permitted to be determined* from the 100-year (99%) value on the National Climatic Data Center data table "Air Freezing Index- USA Method (Base 32°)" at www.ncdc.noaa.gov/fpsf.html.

j. The jurisdiction shall fill in this part of the table with the mean annual temperature from the National Climatic Data Center data table "Air Freezing Index-USA Method (Base 32°F)" at www.ncdc.noaa.gov/fpsf.html.

k. In accordance with Section 301.2.1.*4*, where there is local historical data documenting structural damage to buildings due to topographic wind speed-up effects, the jurisdiction shall fill in this part of the table with "YES." Otherwise, the jurisdiction shall indicate "NO" in this part of the table.

TABLE 301.2(2)
COMPONENT AND CLADDING LOADS FOR A BUILDING WITH A MEAN ROOF HEIGHT OF 30 FEET LOCATED IN EXPOSURE B (psf)[a, b, c, d, e]

	ZONE	EFFECTIVE WIND AREA (feet^2)	BASIC WIND SPEED (mph—3-second gust)																							
			85		90		100		105		110		120		125		130		140		145		150		170	
Roof > 0 to 10 degrees	1	10	10.0	-13.0	10.0	-14.6	10.0	-18.0	10.0	-19.8	10.0	-21.8	10.5	-25.9	11.4	-28.1	12.4	-30.4	14.3	-35.3	15.4	-37.8	16.5	-40.5	21.1	-52.0
	1	20	10.0	-12.7	10.0	-14.2	10.0	-17.5	10.0	-19.3	10.0	-21.2	10.0	-25.2	10.7	-27.4	11.6	-29.6	13.4	-34.4	14.4	-36.9	15.4	-39.4	19.8	-50.7
	1	50	10.0	-12.2	10.0	-13.7	10.0	-16.9	10.0	-18.7	10.0	-20.5	10.0	-24.4	10.0	-26.4	10.6	-28.6	12.3	-33.2	13.1	-35.6	14.1	-38.1	18.1	-48.9
	1	100	10.0	-11.9	10.0	-13.3	10.0	-18.5	10.0	-18.2	10.0	-19.9	10.0	-23.7	10.0	-25.7	10.0	-27.8	11.4	-32.3	12.2	-34.6	13.0	-37.0	16.7	-47.6
	2	10	10.0	-21.8	10.0	-24.4	10.0	-30.2	10.0	-33.3	10.0	-36.5	10.5	-43.5	11.4	-47.2	12.4	-51.0	14.3	-59.2	15.4	-63.5	16.5	-67.9	21.1	-87.2
	2	20	10.0	-19.5	10.0	-21.8	10.0	-27.0	10.0	-29.7	10.0	-32.6	10.0	-38.8	10.7	-42.1	11.6	-45.6	13.4	-52.9	14.4	-56.7	15.4	-60.7	19.8	-78.0
	2	50	10.0	-16.4	10.0	-18.4	10.0	-22.7	10.0	-25.1	10.0	-27.5	10.0	-32.7	10.0	-35.5	10.6	-38.4	12.3	-44.5	13.1	-47.8	14.1	-51.1	18.1	-65.7
	2	100	10.0	-14.1	10.0	-15.8	10.0	-19.5	10.0	-21.5	10.0	-23.6	10.0	-28.1	10.0	-30.5	10.0	-33.0	11.4	-38.2	12.2	-41.0	13.0	-43.9	16.7	-56.4
	3	10	10.0	-32.8	10.0	-36.8	10.0	-45.4	10.0	-50.1	10.0	-55.0	10.5	-65.4	11.4	-71.0	12.4	-76.8	14.3	-89.0	15.4	-95.5	16.5	-102.2	21.1	-131.3
	3	20	10.0	-27.2	10.0	-30.5	10.0	-37.6	10.0	-41.5	10.0	-45.5	10.0	-54.2	10.7	-58.8	11.6	-63.6	13.4	-73.8	14.4	-79.1	15.4	-84.7	19.8	-108.7
	3	50	10.0	-19.7	10.0	-22.1	10.0	-27.3	10.0	-30.1	10.0	-33.1	10.0	-39.3	10.0	-42.7	10.6	-46.2	12.3	-53.5	13.1	-57.4	14.1	-61.5	18.1	-78.9
	3	100	10.0	-14.1	10.0	-15.8	10.0	-19.5	10.0	-21.5	10.0	-23.6	10.0	-28.1	10.0	-30.5	10.0	-33.0	11.4	-38.2	12.2	-41.0	13.0	-43.9	16.7	-56.4
Roof > 10 to 30 degrees	1	10	10.0	-11.9	10.0	-13.3	10.4	-16.5	11.4	-18.2	12.5	-19.9	14.9	-23.7	16.2	-25.7	17.5	-27.8	20.3	-32.3	21.8	-34.6	23.3	-37.0	30.0	-47.6
	1	20	10.0	-11.6	10.0	-13.0	10.0	-16.0	10.4	-17.6	11.4	-19.4	13.6	-23.0	14.8	-25.0	16.0	-27.0	18.5	-31.4	19.9	-33.7	21.3	-36.0	27.3	-46.3
	1	50	10.0	-11.1	10.0	-12.5	10.0	-15.4	10.0	-17.0	10.0	-18.6	11.9	-22.2	12.9	-24.1	13.9	-26.0	16.1	-30.2	17.3	-32.4	18.5	-34.6	23.8	-44.5
	1	100	10.0	-10.8	10.0	-12.1	10.0	-14.9	10.0	-16.5	10.0	-18.1	10.5	-21.5	11.4	-23.3	12.4	-25.2	14.3	-29.3	15.4	-31.4	16.5	-33.6	21.1	-43.2
	2	10	10.0	-25.1	10.0	-28.2	10.4	-34.8	11.4	-38.3	12.5	-42.1	14.9	-50.1	16.2	-54.3	17.5	-58.7	20.3	-68.1	21.8	-73.1	23.3	-78.2	30.0	-100.5
	2	20	10.0	-22.8	10.0	-25.6	10.0	-31.5	10.4	-34.8	11.4	-38.2	13.6	-45.4	14.8	-49.3	16.0	-53.3	18.5	-61.8	19.9	-66.3	21.3	-71.0	27.3	-91.2
	2	50	10.0	-19.7	10.0	-22.1	10.0	-27.3	10.0	-30.1	10.0	-33.0	11.9	-39.3	12.9	-42.7	13.9	-46.1	16.1	-53.5	17.3	-57.4	18.5	-61.4	23.8	-78.9
	2	100	10.0	-17.4	10.0	-19.5	10.0	-24.1	10.0	-26.6	10.0	-29.1	10.5	-34.7	11.4	-37.6	12.4	-40.7	14.3	-47.2	15.4	-50.6	16.5	-54.2	21.1	-69.6
	3	10	10.0	-25.1	10.0	-28.2	10.4	-34.8	11.4	-38.3	12.5	-42.1	14.9	-50.1	16.2	-54.3	17.5	-58.7	20.3	-68.1	21.8	-73.1	23.3	-78.2	30.0	-100.5
	3	20	10.0	-22.8	10.0	-25.6	10.0	-31.5	10.4	-34.8	11.4	-38.2	13.6	-45.4	14.8	-49.3	16.0	-53.3	18.5	-61.8	19.9	-66.3	21.3	-71.0	27.3	-91.2

	3	50	10.0	-19.7	10.0	-22.1	10.0	-27.3	10.0	-30.1	10.0	-33.0	11.9	-39.3	12.9	-42.7	13.9	-46.1	16.1	-53.5	17.3	-57.4	18.5	-61.4	23.8	-78.9
	3	100	10.0	-17.4	10.0	-19.5	10.0	-24.1	10.0	-26.6	10.0	-29.1	10.5	-34.7	11.4	-37.6	12.4	-40.7	14.3	-47.2	15.4	-50.6	16.5	-54.2	21.1	-69.6
Roof > 30 to 45 degrees	1	10	11.9	-13.0	13.3	-14.6	16.5	-18.0	18.2	-19.8	19.9	-21.8	23.7	-25.9	25.7	-28.1	27.8	-30.4	32.3	-35.3	34.6	-37.8	37.0	-40.5	47.6	-52.0
	1	20	11.6	-12.3	13.0	-13.8	16.0	-17.1	17.6	-18.8	19.4	-20.7	23.0	-24.6	25.0	-26.7	27.0	-28.9	31.4	-33.5	33.7	-35.9	36.0	-38.4	46.3	-49.3
	1	50	11.1	-11.5	12.5	-12.8	15.4	-15.9	17.0	-17.5	18.6	-19.2	22.2	-22.8	24.1	-24.8	26.0	-25.8	30.2	-31.1	32.4	-33.3	34.6	-35.7	44.5	-45.8
	1	100	10.8	-10.8	12.1	-12.1	14.9	-14.9	16.5	-16.5	18.1	-18.1	21.5	-21.5	23.3	-23.3	25.2	-25.2	29.3	-29.3	31.4	-31.4	33.6	-33.6	43.2	-43.2
	2	10	11.9	-15.2	13.3	-17.0	16.5	-21.0	18.2	-23.2	19.9	-25.5	23.7	-30.3	25.7	-32.9	27.8	-35.6	32.3	-41.2	34.6	-44.2	37.0	-47.3	47.6	-60.8
	2	20	11.6	-14.5	13.0	-16.3	16.0	-20.1	17.6	-22.2	19.4	-24.3	23.0	-29.0	25.0	-31.4	27.0	-34.0	31.4	-39.4	33.7	-42.3	36.0	-45.3	46.3	-58.1
	2	50	11.1	-13.7	12.5	-15.3	15.4	-18.9	17.0	-20.8	18.6	-22.9	22.2	-27.2	24.1	-29.5	26.0	-32.0	30.2	-37.1	32.4	-39.8	34.6	-42.5	44.5	-54.6
	2	100	10.8	-13.0	12.1	-14.6	14.9	-18.0	16.5	-19.8	18.1	-21.8	21.5	-25.9	23.3	-28.1	25.2	-30.4	29.3	-35.3	31.4	-37.8	33.6	-40.5	43.2	-52.0
	3	10	11.9	-15.2	13.3	-17.0	16.5	-21.0	18.2	-23.2	19.9	-25.5	23.7	-30.3	25.7	-32.9	27.8	-35.6	32.3	-41.2	34.6	-44.2	37.0	-47.3	47.6	-60.8
	3	20	11.6	-14.5	13.0	-16.3	16.0	-20.1	17.6	-22.2	19.4	-24.3	23.0	-29.0	25.0	-31.4	27.0	-34.0	31.4	-39.4	33.7	-42.3	36.0	-45.3	46.3	-58.1
	3	50	11.1	-13.7	12.5	-15.3	15.4	-18.9	17.0	-20.8	18.6	-22.9	22.2	-27.2	24.1	-29.5	26.0	-32.0	30.2	-37.1	32.4	-39.8	34.6	-42.5	44.5	-54.5
	3	100	10.8	-13.0	12.1	-14.6	14.9	-18.0	16.5	-19.8	18.1	-21.8	21.5	-25.9	23.3	-28.1	25.2	-30.4	29.3	-35.3	31.4	-37.8	33.6	-40.5	43.2	-52.0
Wall	4	10	13.0	-14.1	14.6	-15.8	18.0	-19.5	19.8	-21.5	21.8	-23.6	25.9	-28.1	28.1	-30.5	30.4	-33.0	35.3	-38.2	37.8	-41.0	40.5	-43.9	52.0	-56.4
	4	20	12.4	-13.5	13.9	-15.1	17.2	-18.7	18.9	-20.6	20.8	-22.6	24.7	-26.9	26.8	-29.2	29.0	-31.6	33.7	-36.7	36.1	-39.3	38.7	-42.1	49.6	-54.1
	4	50	11.6	-12.7	13.0	-14.3	16.1	-17.6	17.8	-19.4	19.5	-21.3	23.2	-25.4	25.2	-27.5	27.2	-29.8	31.6	-34.6	33.9	-37.1	36.2	-39.7	46.6	-51.0
	4	100	11.1	-12.2	12.4	-13.6	15.3	-16.8	16.9	-18.5	18.5	-20.4	22.0	-24.2	23.9	-26.3	25.9	-28.4	30.0	-33.0	32.2	-35.4	34.4	-37.8	44.2	-48.6
	5	10	13.0	-17.4	14.6	-19.5	18.0	-24.1	19.8	-26.6	21.8	-29.1	25.9	-34.7	28.1	-37.6	30.4	-40.7	35.3	-47.2	37.8	-50.6	40.5	-54.2	52.0	-69.6
	5	20	12.4	-16.2	13.9	-18.2	17.2	-22.5	18.9	-24.8	20.8	-27.2	24.7	-32.4	26.8	-35.1	29.0	-38.0	33.7	-44.0	36.1	-47.2	38.7	-50.5	49.6	-64.9
	5	50	11.6	-14.7	13.0	-16.5	16.1	-20.3	17.8	-22.4	19.5	-24.6	23.2	-29.3	25.2	-31.8	27.2	-34.3	31.6	-39.8	33.9	-42.7	36.2	-45.7	46.6	-58.7
	5	100	11.1	-13.5	12.4	-15.1	15.3	-18.7	16.9	-20.6	18.5	-22.6	22.0	-26.9	23.9	-29.2	25.9	-31.6	30.0	-36.7	32.2	-39.3	34.4	-42.1	44.2	-54.1

For SI: 1 foot = 304.8 mm, 1 square foot = 0.0929 m^2, 1 mile per hour = 0.447 m/s, 1 pound per square foot = 0.0479 kPa.

Notes:

a. The effective wind area shall be equal to the span length multiplied by an effective width. This width shall be permitted to be not be less than one-third the span length. For cladding fasteners, the effective wind area shall not be greater than the area that is tributary to an individual fastener.

b. For effective areas between those given above, the load may be interpolated; otherwise, use the load associated with the lower effective area.

c. Table values shall be adjusted for height and exposure by multiplying by the adjustment coefficient in Table 301.2(3).

d. See Figure 301.2(7) for location of zones.

e. Plus and minus signs signify pressures acting toward and away from the building surfaces.

TABLE 301.2(3)
HEIGHT AND EXPOSURE ADJUSTMENT COEFFICIENTS FOR TABLE 301.2(2)

MEAN ROOF HEIGHT	EXPOSURE		
	B	C	D
15	1.00	1.21	1.47
20	1.00	1.29	1.55
25	1.00	1.35	1.61
30	1.00	1.40	1.66
35	1.05	1.45	1.70
40	1.09	1.49	1.74
45	1.12	1.53	1.78

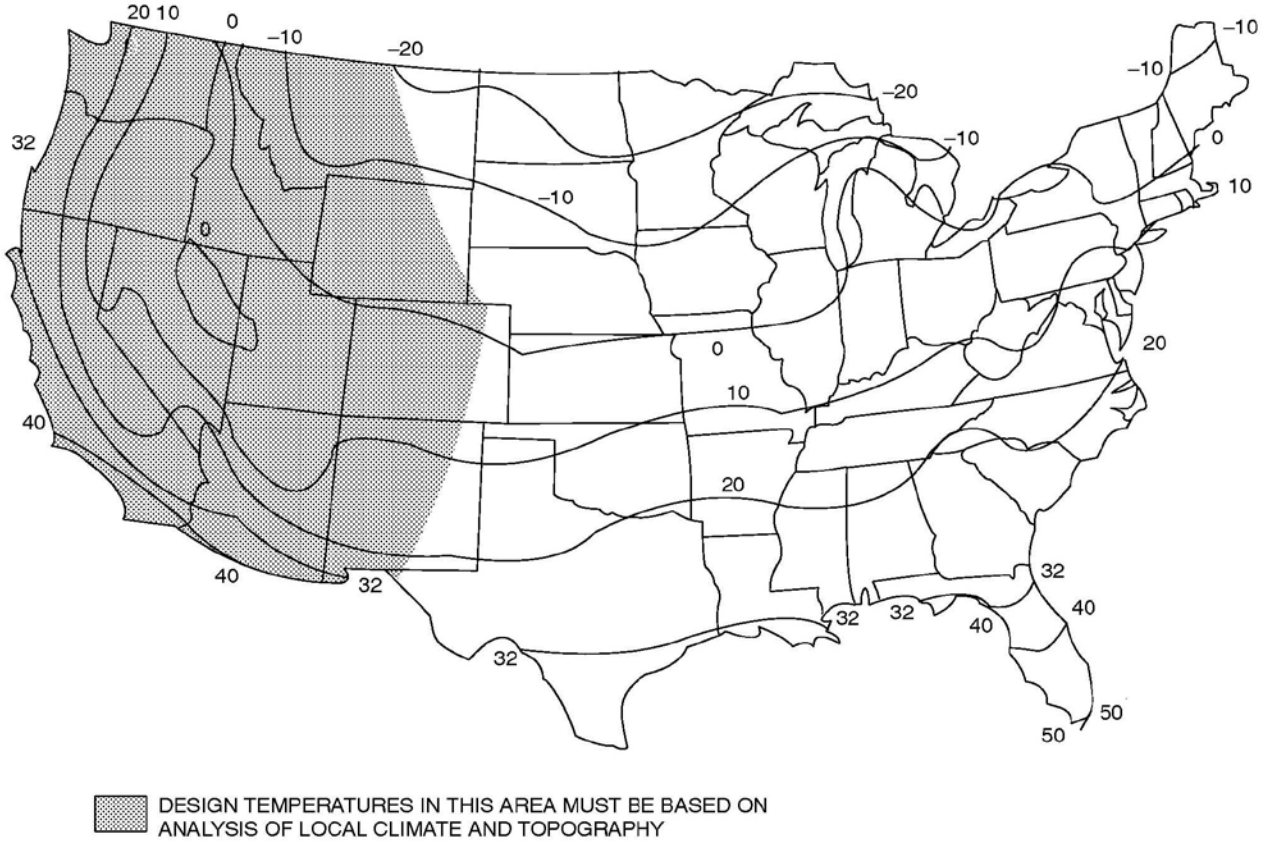

50	1.16	1.56	1.81
55	1.19	1.59	1.84
60	1.22	1.62	1.87

For SI: °C = [(°F)-32]/1.8.

FIGURE 301.2(1)
ISOLINES OF THE 97½ PERCENT WINTER (DECEMBER, JANUARY AND FEBRUARY) DESIGN TEMPERATURES (°F)

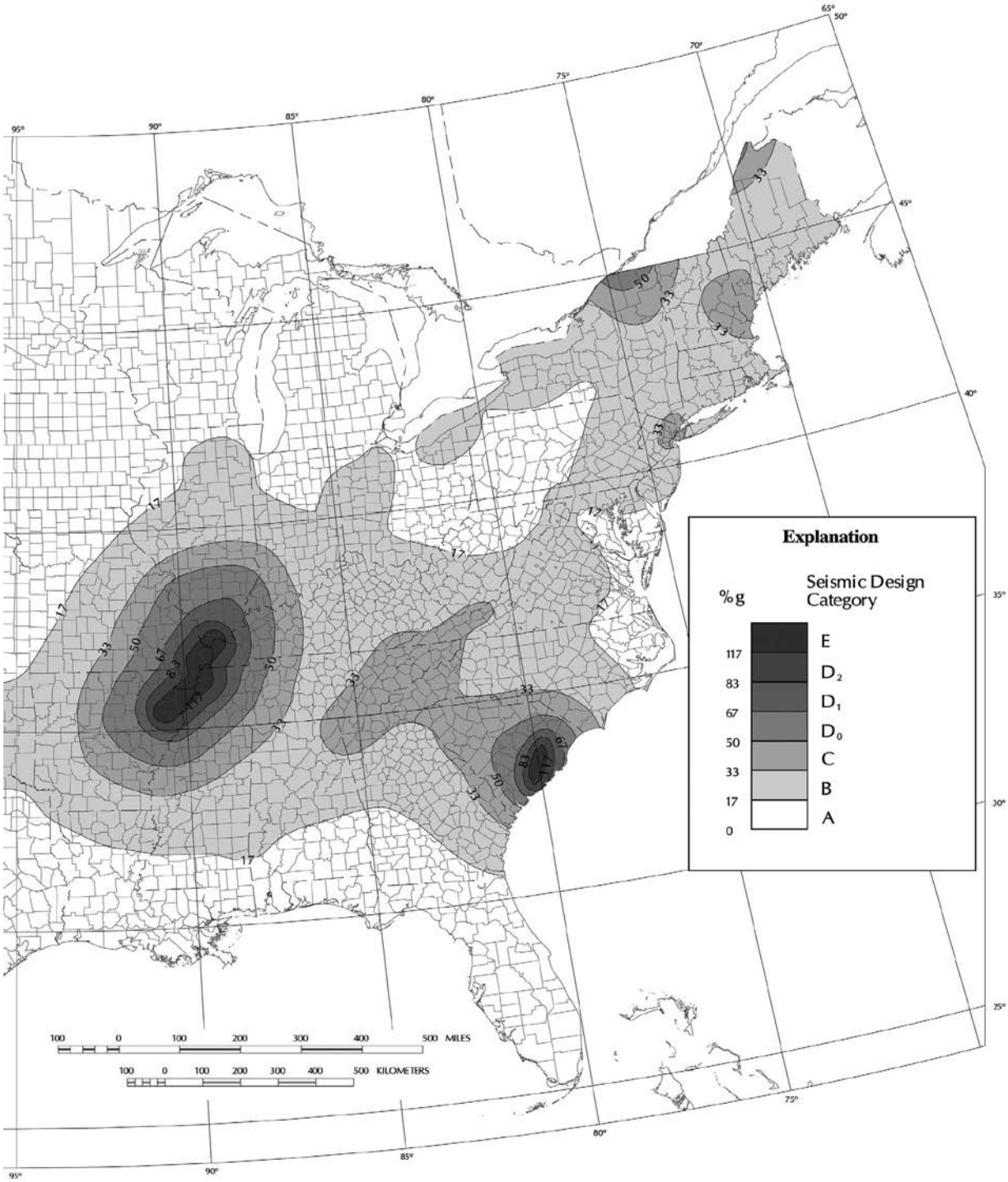

FIGURE 301.2(2)
SEISMIC DESIGN CATEGORIES—SITE CLASS D

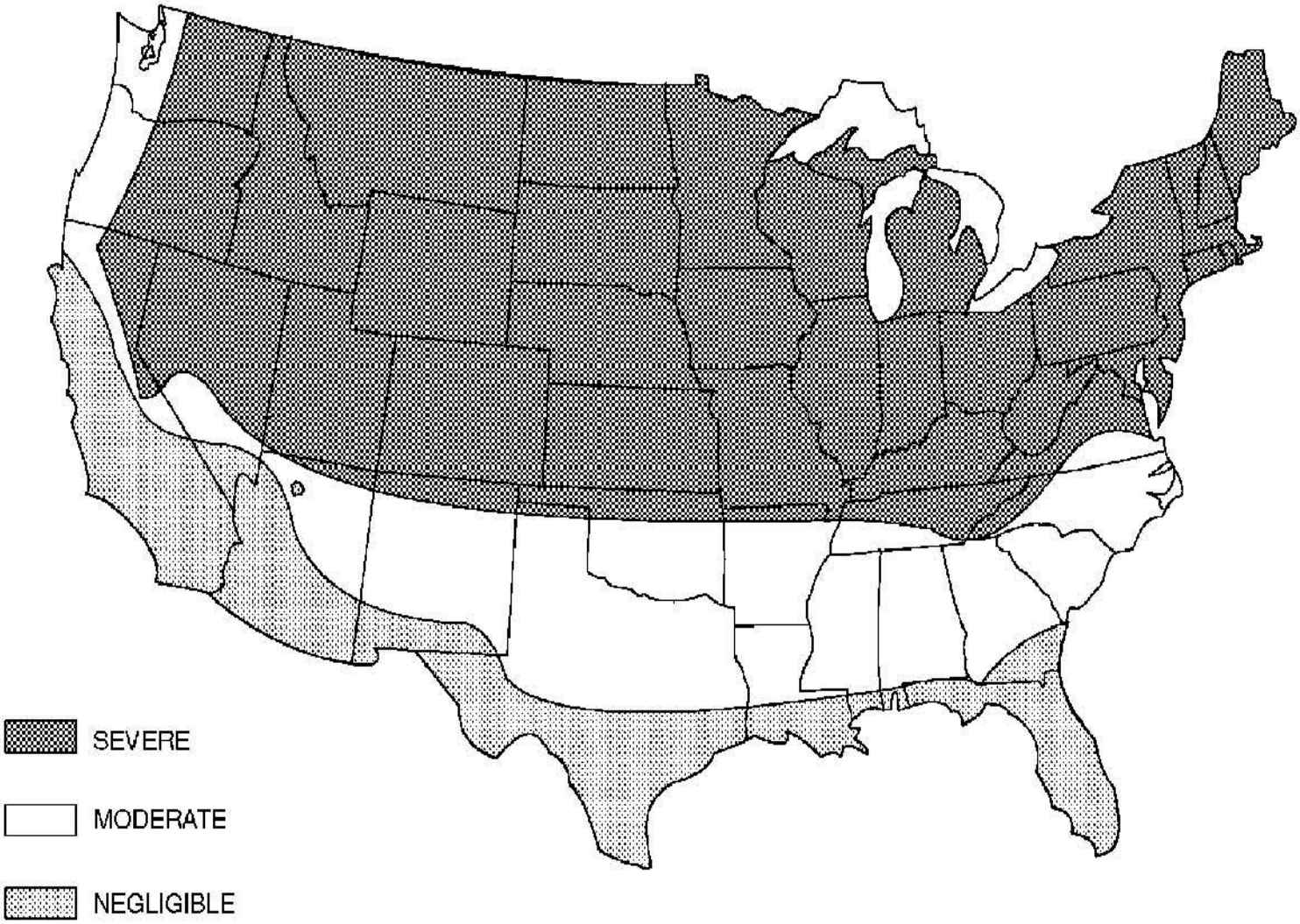

a. Note: Lines defining areas are approximate only. Local conditions may be more or less severe than indicated by the regional classification. A severe classification is where weather conditions result in significant snowfall combined with extended periods during which there is little or no natural thawing causing deicing salts to be used extensively.

FIGURE 301.2(3)
WEATHERING PROBABILITY MAP FOR CONCRETE

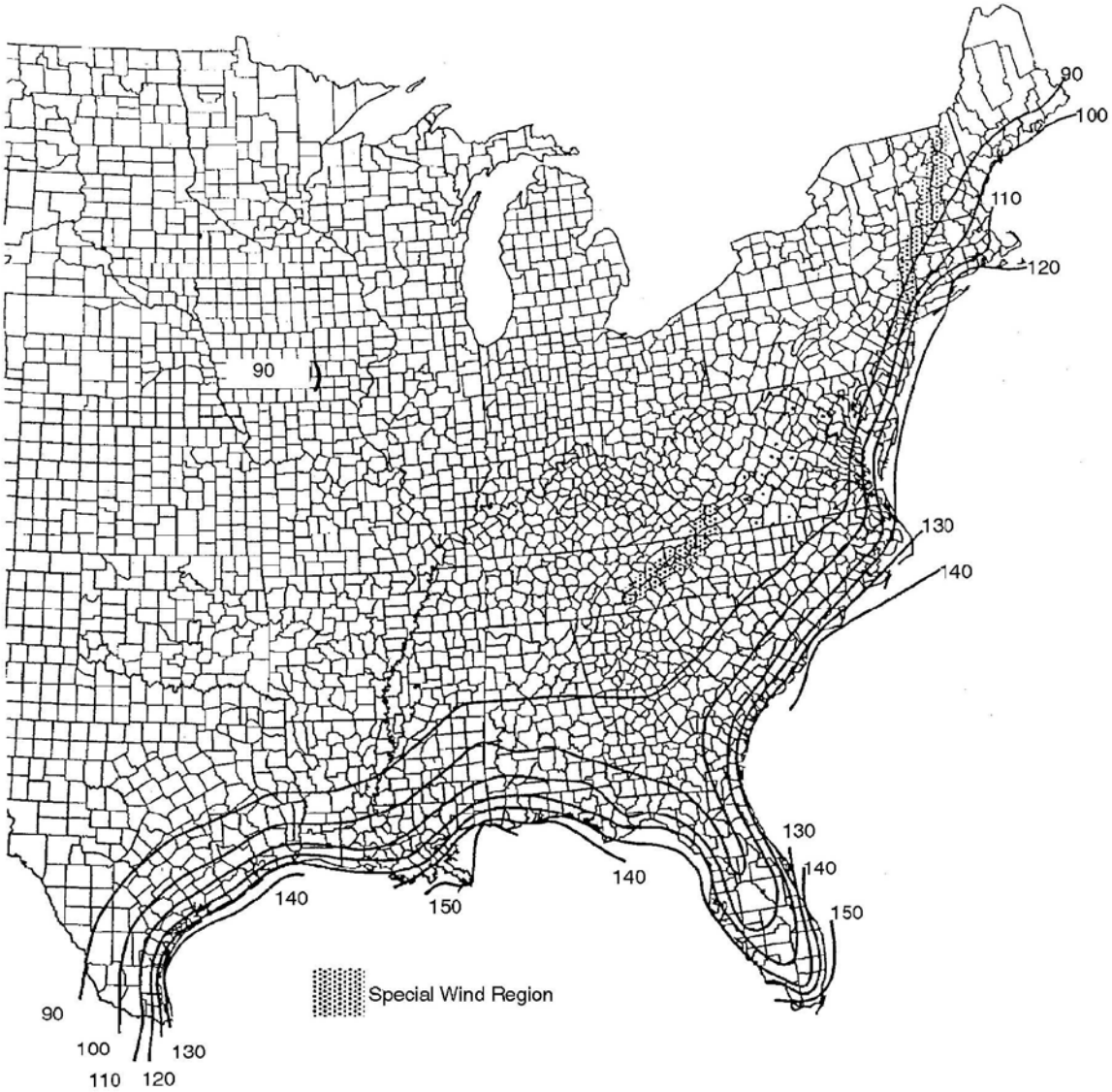

Location	*V* mph
Hawaii	105
Puerto Rico	145
Guam	170
Virgin Islands	145
American Samoa	125

FIGURE 301.2(4)
BASIC WIND SPEEDS FOR 50-YEAR MEAN RECURRENCE INTERVAL

For SI: 1 foot = 304.8 mm, 1 mile per hour = 0.447 m/s.

a. Values are nominal design 3-second gust wind speeds in miles per hour at 33 feet above ground for Exposure C category.

b. Linear interpolation between wind contours is permitted.

c. Islands and coastal areas outside the last contour shall use the last wind speed contour of the coastal area.

d. Mountainous terrain, gorges, ocean promontories and special wind regions shall be examined for unusual wind conditions.

e. Enlarged view of Eastern and Southern seaboards are on the following pages.

For SI: 1 foot = 304.8 mm, 1 pound per square foot = 0.0479 kPa, 1 mile = 1.61 km

a. In CS areas, site-specific Case Studies are required to establish ground snow loads. Extreme local variations in the ground snow loads in areas preclude mapping at this scale.
b. Numbers in parentheses represent the upper elevation limits in feet for the ground snow load values presented below. Site-specific case studies are required to establish ground snow loads at elevations not covered.

To convert lb/sq ft to kN/m^2, multiply by 0.0479.
To convert feet to meters, multiply by 0.3048.

FIGURE 301.2(5)
GROUND SNOW LOADS, P_g, FOR THE UNITED STATES (lb/ft^2)

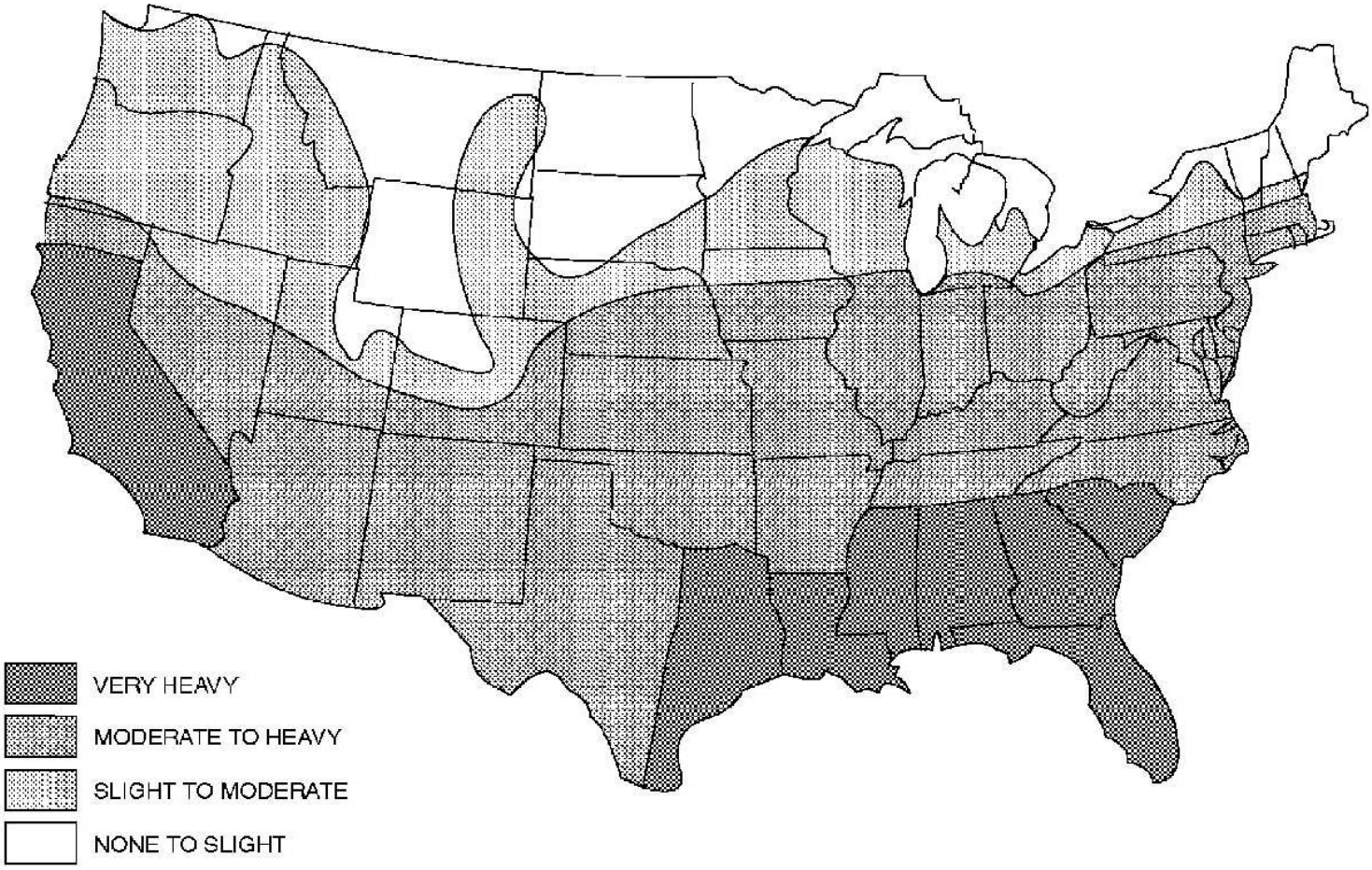

Note: Lines defining areas are approximate only. Local conditions may be more or less severe than indicated by the regional classification.

FIGURE 301.2(6)
TERMITE INFESTATION PROBABILITY MAP

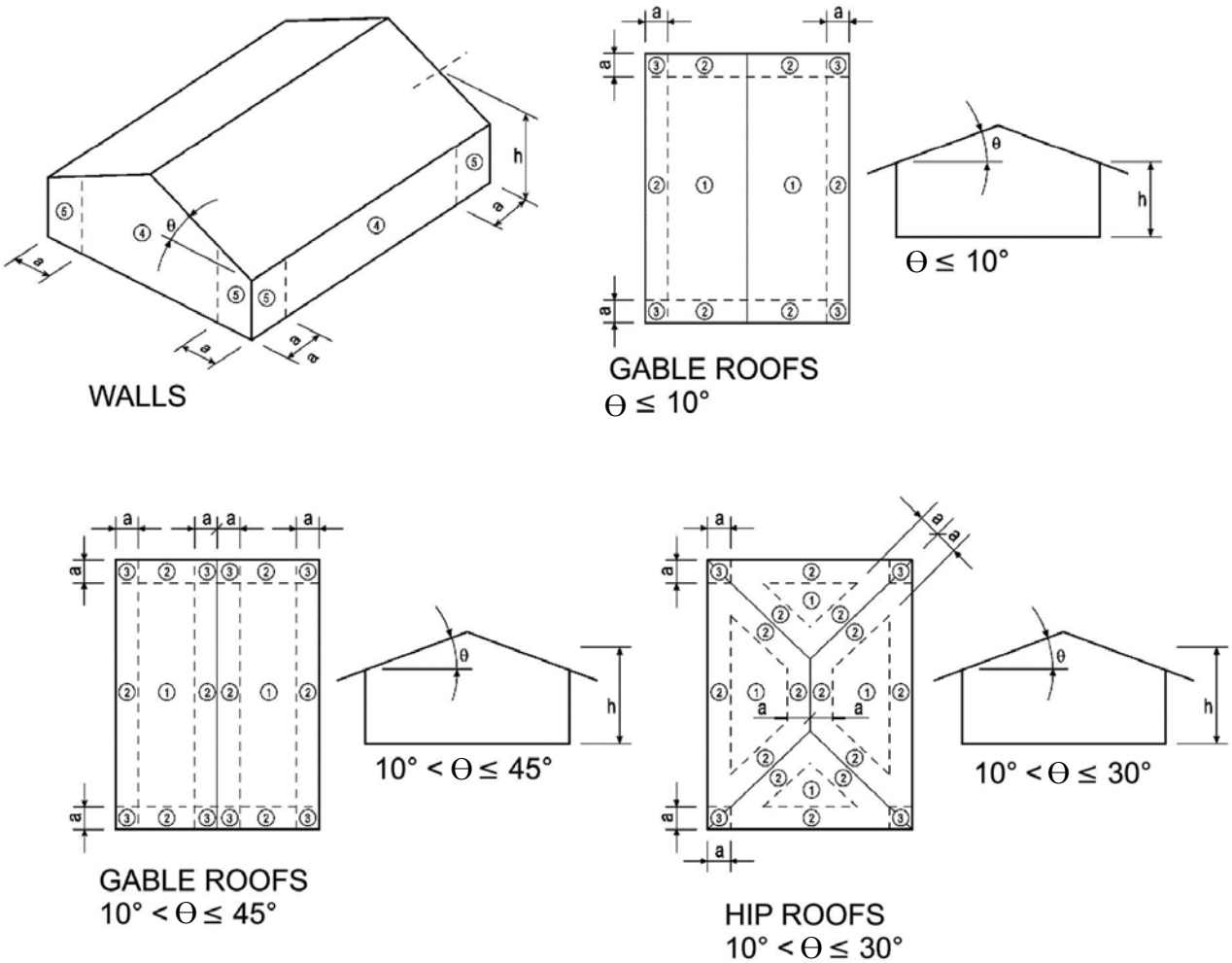

For SI: 1 foot = 304.8 mm, 1 degree = 0.0175 rad.
Note: a = 4 feet in all cases.

FIGURE 301.2(7)
COMPONENT AND CLADDING PRESSURE ZONES

301.2.1.2 Protection of openings. Windows in buildings located in windborne debris regions shall have glazed openings protected from windborne debris. Glazed opening protection for windborne debris shall meet the requirements of the Large Missile Test of ASTM E 1996 and ASTM E 1886 referenced therein. Garage door glazed opening protection for windborne debris shall meet the requirements of an approved impact resisting standard or ANSI/DASMA 115.

Exception: Wood structural panels with a minimum thickness of $^{7}/_{16}$ inch (11 mm) and a maximum span of 8 feet (2438 mm) shall be permitted for opening protection in one-and two-story buildings. Panels shall be precut and so that they can be attached to the framing surrounding the opening containing the product with the glazed opening. Panels shall be predrilled as required for the anchorage method and shall be secured with the attachment hardware provided. Attachments shall be designed to resist the component and cladding loads determined in accordance with either Table 301.2(2) or ASCE 7, with the permanent corrosion-resistant attachment hardware provided and anchors permanently installed on the building. Attachment in accordance with Table 301.2.1.2 is permitted for buildings with a mean roof height of 33 feet (10 058 mm) or less where windspeeds do not exceed 130 miles per hour (58 m/s).

TABLE 301.2.1.2
WINDBORNE DEBRIS PROTECTION FASTENING SCHEDULE FOR WOOD STRUCTURAL PANELS[a, b, c, d]

FASTENER TYPE	FASTENER SPACING (inches)[a, b]		
	Panel span ≤ 4 feet	**4 feet < panel span ≤ 6 feet**	**6 feet < panel span≤ 8 feet**
No. 8 wood screw based anchor with 2-inch embedment length	16	10	8
No. 10 wood screw based anchor with 2-inch embedment length	16	12	9
¼-inch lag screw based anchor with 2-inch embedment length	16	16	16

For SI: 1 inch = 25.4 mm, 1 foot = 304.8 mm, 1 pound = 4.448 N, 1 mile per hour = 0.447 m/s.

a. This table is based on 130 mph wind speeds and a 33-foot mean roof height.

b. Fasteners shall be installed at opposing ends of the wood structural panel. Fasteners shall be located a minimum of 1 inch from the edge of the panel.

c. Anchors shall penetrate through the exterior wall covering with an embedment length of 2 inches minimum into the building frame. Fasteners shall be located a minimum of 2½ inches from the edge of concrete block or concrete.

d. Where panels are attached to masonry or masonry/stucco, they shall be attached using vibration-resistant anchors having a minimum ultimate withdrawal capacity of 1500 pounds.

301.2.1.3 Wind speed conversion. When referenced documents are based on fastest mile wind speeds, the three-second gust wind *velocities* of

Figure 301.2(4) shall be converted to fastest mile wind *velocities* using Table 301.2.1.3.

TABLE 301.2.1.3
EQUIVALENT BASIC WIND SPEEDS[a]

3-second gust	85	90	100	105	110	120	125	130	140	145	150	160	170
Fastest mile	*70*	*75*	*80*	*85*	*90*	*100*	*105*	*110*	*120*	*125*	*130*	*140*	*150*

For SI: 1 mile per hour = *1.609 km/h*.
a. Linear interpolation is permitted.

301.2.1.4 Exposure category. For each wind direction considered, an exposure category that adequately reflects the characteristics of ground surface irregularities shall be determined for the site at which the building or structure is to be constructed. For a site located in the transition zone between categories, the category resulting in the largest wind forces shall apply. Account shall be taken of variations in ground surface roughness that arise from natural topography and vegetation as well as from constructed features. For any given wind direction, the exposure in which a specific building or other structure is sited shall be assessed as being one of the following categories:

1. Exposure A. Large city centers with at least 50 percent of the buildings having a height in excess of 70 feet (21 336 mm). Use of this exposure category shall be limited to those areas for which terrain representative of Exposure A prevails in the upwind direction for a distance of at least 0.5 mile (0.8 km) or 10 times the height of the building or other structure, whichever is greater. Possible channeling effects or increased velocity pressures due to the building or structure being located in the wake of adjacent buildings shall be taken into account.

2. Exposure B. Urban and suburban areas, wooded areas, or other terrain with numerous closely spaced obstructions having the size of single-family dwellings or larger. Exposure B shall be assumed unless the site meets the definition of another type exposure.

3. Exposure C. Open terrain with scattered obstructions, including surface undulations or other irregularities, having heights generally less than 30 feet (9144 mm) extending more than 1,500 feet (457 m) from the building site in any quadrant. This exposure shall also apply to any building located within Exposure B type terrain where the building is directly adjacent to open areas of Exposure C type

terrain in any quadrant for a distance of more than 600 feet (183 m). This category includes flat open country, grasslands and shorelines in hurricane prone regions.

4. Exposure D. Flat, unobstructed areas exposed to wind flowing over open water (excluding shorelines in hurricane prone regions) for a distance of at least 1 mile (1.61 km). Shorelines in Exposure D include inland waterways, the Great Lakes, and coastal areas of California, Oregon, Washington and Alaska. This exposure shall apply only to those buildings and other structures exposed to the wind coming from over the water. Exposure D extends inland from the shoreline a distance of 1500 feet (457 m) or 10 times the height of the building or structure, whichever is greater

301.2.1.5 *Deleted.*

301.2.1.5.1 *Deleted.*

301.2.2 Seismic provisions. The seismic provisions of this code shall apply to buildings constructed in Seismic Design Categories C, D_0, D_1 and D_2, as determined in accordance with this section.

Exception: Detached one-, two, *and three*-family dwellings located in Seismic Design Category C are exempt from the seismic requirements of this code.

301.2.2.1 Determination of seismic design category. Buildings shall be assigned a seismic design category in accordance with Figure 301.2(2).

301.2.2.1.1 Alternate determination of seismic design category. The Seismic Design Categories and corresponding Short Period Design Spectral Response Accelerations, S_{DS} shown in Figure 301.2(2) are based on soil Site Class D, as defined in Section 1613.5.2 of the *Ohio* Building Code. If soil conditions are other than Site Class D, the Short Period Design Spectral Response Accelerations, S_{DS}, for a site can be determined according to Section 1613.5 of the *Ohio* Building Code. The value of S_{DS} determined according to Section 1613.5 of the *Ohio* Building Code is permitted to be used to set the seismic design category according to Table 301.2.2.1.1, and to interpolate between values in Tables *602.10.3(3), 603.9.2(1)* and other seismic design requirements of this code.

TABLE 301.2.2.1.1
SEISMIC DESIGN CATEGORY DETERMINATION

CALCULATED S_{DS}	SEISMIC DESIGN CATEGORY
$S_{DS} \leq 0.17g$	A
$0.17g < S_{DS} \leq 0.33g$	B
$0.33g < S_{DS} \leq 0.50g$	C
$0.50g < S_{DS} \leq 0.67g$	D_0
$0.67g < S_{DS} \leq 0.83g$	D_1
$0.83g < S_{DS} \leq 1.17g$	D_2
$1.17g < S_{DS}$	E

301.2.2.1.2 Alternative determination of Seismic Design Category E. Buildings located in Seismic Design Category E in accordance with Figure 301.2(2) are permitted to be reclassified as being in Seismic Design Category D2 provided one of the following is done:

1. A more detailed evaluation of the seismic design category is made in accordance with the provisions and maps of the *Ohio* Building Code. Buildings located in Seismic Design Category E per Table R301.2.2.1.1, but located in Seismic Design Category D per the *Ohio* Building Code, may be designed using the Seismic Design Category D_2 requirements of this code.

2. Buildings located in Seismic Design Category E that conform to the following additional restrictions are permitted to be constructed in accordance with the provisions for Seismic Design Category D_2 of this code:

   2.1. All exterior shear wall lines or braced wall panels are in one plane vertically from the foundation to the uppermost story.

   2.2. Floors shall not cantilever past the exterior walls.

   2.3. The building is within all of the requirements of Section 301.2.2.2.5 for being considered as regular.

301.2.2.2 Seismic Design Category C. Structures assigned to Seismic Design Category C shall conform to the requirements of this section.

301.2.2.2.1 Weights of materials. Average dead loads shall not exceed 15 pounds per square foot (720 Pa) for the combined roof and ceiling assemblies (on a horizontal projection) or 10 pounds per square foot (480 Pa) for floor assemblies, except as further limited by Section 301.2.2. Dead loads for walls above grade shall not exceed:

1. Fifteen pounds per square foot (720 Pa) for exterior light-frame wood walls.

2. Fourteen pounds per square foot (670 Pa) for exterior light-frame cold-formed steel walls.

3. Ten pounds per square foot (480 Pa) for interior light-frame wood walls.

4. Five pounds per square foot (240 Pa) for interior light-frame cold-formed steel walls.

5. Eighty pounds per square foot (3830 Pa) for 8-inch-thick (203 mm) masonry walls.

6. Eighty-five pounds per square foot (4070 Pa) for 6-inch-thick (152 mm) concrete walls.

7. Ten pounds per square foot (480 Pa) for SIP walls.

Exceptions:

1. Roof and ceiling dead loads not exceeding 25 pounds per square foot (1190 Pa) shall be permitted provided the wall bracing amounts in Chapter 6 are increased in accordance with Table 301.2.2.2.1.

2. Light-frame walls with stone or masonry veneer shall be permitted in accordance with the provisions of Sections 702.1 and 703.

3. Fireplaces and chimneys shall be permitted in accordance with Chapter 10.

TABLE 301.2.2.2.1
WALL BRACING ADJUSTMENT FACTORS BY ROOF COVERING DEAD LOAD[a]

WALL SUPPORTING	ROOF/CEILING DEAD LOAD	
	15 psf or less	25 psf
Roof only	1.0	1.2
Roof plus one or two stories	1.0	1.1

For SI: 1 pound per square foot = 0.0479 kPa.
a. Linear interpolation shall be permitted.

301.2.2.2.2 Stone and masonry veneer. Anchored stone and masonry veneer shall comply with the requirements of Sections 702.1 and 703.

301.2.2.2.3 Masonry construction. Masonry construction shall comply with the requirements of Section 606.11.2.

301.2.2.2.4 Concrete construction. Detached one-, two *and three*-family dwellings with exterior above-grade concrete walls shall comply with the requirements of Section 611, PCA 100 or shall be designed in accordance with ACI 318. Townhouses with above-grade exterior concrete walls shall comply with the requirements of PCA 100 or shall be designed in accordance with ACI 318.

301.2.2.2.5 Irregular buildings. Prescriptive construction as regulated by this code shall not be used for irregular structures located in Seismic Design Categories C, D_0, D_1 and D_2. Irregular portions of structures shall be designed in accordance with accepted engineering practice to the extent the irregular features affect the performance of the remaining structural system. When the forces associated with the irregularity are resisted by a structural system designed in accordance with accepted engineering practice, design of the remainder of the building shall be permitted using the provisions of this code. A building or portion of a building shall be considered to be irregular when one or more of the following conditions occur:

1. When exterior shear wall lines or braced wall panels are not in one plane vertically from the foundation to the uppermost story in which they are required.

Exception: For wood light-frame construction, floors with cantilevers or setbacks not exceeding four times the nominal depth of the wood floor joists are permitted to support braced wall panels that are out of plane with braced wall panels below provided that:

1. Floor joists are nominal 2 inches by 10 inches (51 mm by 254 mm) or larger and spaced not more than 16 inches (406 mm) on center.

2. The ratio of the back span to the cantilever is at least 2 to 1.

3. Floor joists at ends of braced wall panels are doubled.

4. For wood-frame construction, a continuous rim joist is connected to ends of all cantilever joists. When spliced, the rim joists shall be spliced using a galvanized metal tie not less than 0.058 inch (1.5 mm) (16 gage) and 1½ inches (38 mm) wide fastened with six 16d nails on each side of the splice or a block of the same size as the rim joist of sufficient length to fit securely between the joist space at which the splice occurs fastened with eight 16d nails on each side of the splice; and

5. Gravity loads carried at the end of cantilevered joists are limited to uniform wall and roof loads and the reactions from headers having a span of 8 feet (2438 mm) or less.

2. When a section of floor or roof is not laterally supported by shear walls or braced wall lines on all edges.

   Exception: Portions of floors that do not support shear walls or braced wall panels above, or roofs, shall be permitted to extend no more than 6 feet (1829 mm) beyond a shear wall or braced wall line.

3. When the end of a braced wall panel occurs over an opening in the wall below and ends at a horizontal distance greater than 1 foot (305 mm) from the edge of the opening. This provision is applicable to shear walls and braced wall panels offset in plane and to braced wall panels offset out of plane as permitted by the exception to Item 1 above.

   Exception: For wood light-frame wall construction, one end of a braced wall panel shall be permitted to extend more than 1 foot (305 mm) over an opening not more than 8 feet (2438 mm) wide in the wall below provided that the opening includes a header in accordance with the following:

   1. The building width, loading condition and framing member species limitations of Table 502.5(1) shall apply; and

   2. Not less than one 2 ×12 or two 2 ×10 for an opening not more than 4 feet (1219 mm) wide; or

   3. Not less than two 2 ×12 or three 2 ×10 for an opening not more than 6 feet (1829 mm) wide; or

   4. Not less than three 2 ×12 or four 2 ×10 for an opening not more than 8 feet (2438 mm) wide; and

   5. The entire length of the braced wall panel does not occur over an opening in the wall below.

4. When an opening in a floor or roof exceeds the lesser of 12 feet (3658 mm) or 50 percent of the least floor or roof dimension.

5. When portions of a floor level are vertically offset.

   Exceptions:

   1. Framing supported directly by continuous foundations at the perimeter of the building.

2. For wood light-frame construction, floors shall be permitted to be vertically offset when the floor framing is lapped or tied together as required by Section 502.6.1.

6. When shear walls and braced wall lines do not occur in two perpendicular directions.

7. When stories above-grade partially or completely braced by wood wall framing in accordance with Section 602 or steel wall framing in accordance with Section 603 include masonry or concrete construction. When this irregularity applies, the entire story shall be designed in accordance with accepted engineering practice.

   Exception: Fireplaces, chimneys and masonry veneer as permitted by this code.

301.2.2.3 Seismic Design Categories D_0, D_1 and D_2. Structures assigned to Seismic Design Categories D_0, D_1 and D_2 shall conform to the requirements for Seismic Design Category C and the additional requirements of this section.

301.2.2.3.1 Height limitations. Wood framed buildings shall be limited to three stories above grade or the limits given in Table 602.10.3(3). Cold-formed steel framed buildings shall be limited to less than or equal to three stories above grade in accordance with AISI S230. Mezzanines as defined in Section 202 shall not be considered as stories. Structural insulated panel buildings shall be limited to two stories above grade.

301.2.2.3.2 Stone and masonry veneer. Anchored stone and masonry veneer shall comply with the requirements of Sections 702.1 and 703.

301.2.2.3.3 Masonry construction. Masonry construction in Seismic Design Categories D_0 and D_1 shall comply with the requirements of Section 606.12.3. Masonry construction in Seismic Design Category D_2 shall comply with the requirements of Section 606.12.4.

301.2.2.3.4 Concrete construction. Buildings with exterior above-grade concrete walls shall comply with PCA 100 or shall be designed in accordance with ACI 318.

301.2.2.3.5 Cold-formed steel framing in Seismic Design Categories D_0, D_1 and D_2. In Seismic Design Categories D_0, D_1 and D_2 in addition to the requirements of this code, cold-formed steel framing shall comply with the requirements of AISI S230.

301.2.2.3.6 Masonry chimneys. Masonry chimneys shall be reinforced and anchored to the building in accordance with Sections 1003.3 and 1003.4.

301.2.2.3.7 Anchorage of water heaters. Water heaters shall be anchored against movement and overturning in accordance with Section 1307.2.

301.2.2.4 Seismic Design Category E. Buildings in Seismic Design Category E shall be designed in accordance with the *Ohio* Building Code, except when the seismic design category is reclassified to a lower seismic design category in accordance with Section 301.2.2.1.

301.2.3 Snow loads. Wood framed construction, cold-formed steel framed construction and masonry and concrete construction, and structural insulated panel construction in regions with ground snow loads 70 pounds per square foot (3.35 kPa) or less, shall be in accordance with Chapters 5, 6 and 8. Buildings in regions with ground snow loads greater than 70 pounds per square foot (3.35 kPa) shall be designed in accordance with accepted engineering practice.

301.2.4 Floodplain construction. Buildings and structures constructed in whole or in part in flood hazard areas (including A or V Zones) as established in Table 301.2(1) shall be designed and constructed in accordance with Section 322.

Exception: Buildings and structures located in whole or in part in identified floodways shall be designed and constructed in accordance with ASCE 24.

301.2.4.1 Alternative provisions. As an alternative to the requirements in Section 322.3 for buildings and structures located in

whole or in part in coastal high hazard areas (V Zones), ASCE 24 is permitted subject to the limitations of this code and the limitations therein.

301.3 Story height. Buildings constructed in accordance with these provisions shall be limited to story heights of not more than the following:

1. For wood wall framing, the laterally unsupported bearing wall stud height permitted by Table 602.3(5) plus a height of floor framing not to exceed 16 inches (406 mm).

   Exception: For wood framed wall buildings with bracing in accordance with Tables 602.10.3(1) and 602.10.3(2), the wall stud clear height used to determine the maximum permitted story height may be increased to 12 feet (3658 mm) without requiring an engineered design for the building wind and seismic force resisting systems provided that the length of bracing required by Table 602.10.3(1) is increased by multiplying by a factor of 1.10 and the length of bracing required by Table 602.10.3(2) is increased by multiplying by a factor of 1.20. Wall studs are still subject to the requirements of this section.

2. For steel wall framing, a stud height of 10 feet (3048 mm), plus a height of floor framing not to exceed 16 inches (406 mm).

3. For masonry walls, a maximum bearing wall clear height of 12 feet (3658 mm) plus a height of floor framing not to exceed 16 inches (406 mm).

   Exception: An additional 8 feet (2438 mm) is permitted for gable end walls.

4. For insulating concrete form walls, the maximum bearing wall height per story as permitted by Section 611 tables plus a height of floor framing not to exceed 16 inches (406 mm).

5. For structural insulated panel (SIP) walls, the maximum bearing wall height per story as permitted by Section 614 tables shall not exceed 10 feet (3048 mm) plus a height of floor framing not to exceed 16 inches (406 mm).

Individual walls or walls studs shall be permitted to exceed these limits as permitted by Chapter 6 provisions, provided story heights are not exceeded. Floor framing height shall be permitted to exceed these limits provided the story height does not exceed 11 feet 7 inches (3531 mm). An engineered design shall be provided for the wall or wall framing members when they exceed the limits of Chapter 6. Where the story height limits are exceeded, an engineered design shall be provided in accordance with the *Ohio* Building Code for the overall wind and seismic force resisting systems.

301.4 Dead load. The actual weights of materials and construction shall be used for determining dead load with consideration for the dead load of fixed service equipment.

301.5 Live load. The minimum uniformly distributed live load shall be as provided in Table 301.5.

TABLE 301.5
MINIMUM UNIFORMLY DISTRIBUTED LIVE LOADS
(in pounds per square foot)

USE	LIVE LOAD
Attics without storage[b]	10
Attics with limited storage[b, g]	20
Habitable attics and attics served with fixed stairs	30
Balconies (exterior) and decks[e]	40
Fire escapes	40
Guardrails and handrails[d]	200[h]
Guardrail in-fill components[f]	50[h]
Passenger vehicle garages[a]	50[a]
Rooms other than sleeping room	40
Sleeping rooms	30
Stairs	40[c]

For SI: 1 pound per square foot = 0.0479 kPa, 1 square inch = 645 mm^2, 1 pound = 4.45 N.

a. Elevated garage floors shall be capable of supporting a 2,000-pound load applied over a 20-square-inch area.

b. Attics without storage are those where the maximum clear height between joist and rafter is less than 42 inches, or where there are not two or more adjacent trusses with the same web configuration capable of containing a rectangle 42 inches high by 2 feet wide, or greater, located within the plane of the truss. For attics without storage, this live load need not be assumed to act concurrently with any other live load requirements.

c. Individual stair treads shall be designed for the uniformly distributed live load or a 300-pound concentrated load acting over an area of 4 square inches, whichever produces the greater stresses.

d. A single concentrated load applied in any direction at any point along the top.

e. See Section 502.2.2 for decks attached to exterior walls.

f. Guard in-fill components (all those except the handrail), balusters and panel fillers shall be designed to withstand a horizontally applied normal load of 50 pounds on an area equal to 1 square foot. This load need not be assumed to act concurrently with any other live load requirement.

g. For attics with limited storage and constructed with trusses, this live load need be applied only to those portions of the bottom chord where there are two or more adjacent trusses with the same web configuration capable of containing a rectangle 42 inches high or greater by 2 feet wide or greater, located within the plane of the truss. The rectangle shall fit between the top of the bottom chord and the bottom of any other truss member, provided that each of the following criteria is met.

1. The attic area is accessible by a pull-down stairway or framed opening in accordance with Section 807.1.
2. The truss has a bottom chord pitch less than 2:12.
3. Required insulation depth is less than the bottom chord member depth.

The bottom chords of trusses meeting the above criteria for limited storage shall be designed for the greater of the actual imposed dead load or 10 psf, uniformly distributed over the entire span.

h. Glazing used in handrail assemblies and guards shall be designed with a safety factor of 4. The safety factor shall be applied to each of the concentrated loads applied to the top of the rail, and to the load on the in-fill components. These loads shall be determined independent of one another, and loads are assumed not to occur with any other live load.

301.6 Roof load. The roof shall be designed for the live load indicated in Table 301.6 or the snow load indicated in Table 301.2(1), whichever is greater.

TABLE 301.6
MINIMUM ROOF LIVE LOADS IN POUNDS-FORCE PER SQUARE FOOT OF HORIZONTAL PROJECTION

ROOF SLOPE	TRIBUTARY LOADED AREA IN SQUARE FEET FOR ANY STRUCTURAL MEMBER		
	0 to 200	201 to 600	Over 600
Flat or rise less than 4 inches per foot (1:3)	20	16	12
Rise 4 inches per foot (1:3) to less than 12 inches per foot (1:1)	16	14	12
Rise 12 inches per foot (1:1) and greater	12	12	12

For SI: 1 square foot = 0.0929 m^2, 1 pound per square foot = 0.0479 kPa, 1 inch per foot = 83.3 mm/m.

301.7 Deflection. The allowable deflection of any structural member under the live load listed in Sections 301.5 and 301.6 shall not exceed the values in Table 301.7.

TABLE 301.7
ALLOWABLE DEFLECTION OF STRUCTURAL MEMBERS[a, b, c, d, e]

STRUCTURAL MEMBER	ALLOWABLE DEFLECTION
Rafters having slopes greater than 3:12 with no finished ceiling attached to rafters	L/180
Interior walls and partitions	H/180
Floors and plastered ceilings	L/360
All other structural members	L/240
Exterior walls with plaster or stucco finish	H/360
Exterior walls—wind loads[a] with brittle finishes	H/240
Exterior walls—wind loads[a] with flexible finishes	L/120[d]
Lintels supporting masonry veneer walls[e]	L/600

Note: L = span length, H = span height.

a. The wind load shall be permitted to be taken as 0.7 times the Component and Cladding loads for the purpose of the determining deflection limits herein.
b. For cantilever members, L shall be taken as twice the length of the cantilever.
c. For aluminum structural members or panels used in roofs or walls of sunroom additions or patio covers, not supporting edge of glass or sandwich panels, the total load deflection shall not exceed L/60. For continuous aluminum structural members supporting edge of glass, the total load deflection shall not exceed L/175 for each glass lite or L/60 for the entire length of the member, whichever is more stringent. For sandwich panels used in roofs or walls of sunroom additions or patio covers, the total load deflection shall not exceed L/120.
d. Deflection for exterior walls with interior gypsum board finish shall be limited to an allowable deflection of H/180.
e. Refer to Section 703.7.2.

301.8 Nominal sizes. For the purposes of this code, where dimensions of lumber are specified, they shall be deemed to be nominal dimensions unless specifically designated as actual dimensions.

SECTION 302
FIRE-RESISTANT CONSTRUCTION

302.1 Exterior walls. Construction, projections, openings and penetrations of exterior walls of dwellings and accessory buildings shall comply with Table 302.1.

Exceptions:

1. Walls, projections, openings or penetrations in walls perpendicular to the line used to determine the fire separation distance.

2. Walls of dwellings and accessory structures located on the same lot.

3. Detached tool sheds and storage sheds, playhouses and similar structures exempted from *approval by Section 102.10* are not required to provide wall protection based on location on the lot. Projections beyond the exterior wall shall not extend over the lot line.

4. Detached garages accessory to a dwelling located within 2 feet (610 mm) of a lot line are permitted to have roof eave projections not exceeding 4 inches (102 mm).

5. Foundation vents installed in compliance with this code are permitted.

6. *Detached garages accessory to a dwelling with an exterior wall located greater than or equal to 3 feet from a lot line.*

Where referenced in this code, an unoccupied space on an adjoining property may be included in the required fire separation distance, provided that the adjoining property is dedicated or deeded so as to preclude, for the life of the structure, the erection of any building or structure on such space (see section 3781.02 of the Revised Code).

302.2 Residential structures with more than two dwelling units. *In structures with more than two dwelling units, each grouping of two dwelling units shall be separated from an adjacent dwelling unit or an adjacent grouping of two dwelling units by two wall assemblies, each having a fire resistance rating of one hour when tested in accordance with ASTM E119 or UL 263 and/or a floor ceiling assembly having a fire resistance rating of two hours when tested in accordance with ASTM E119 or UL 263 .*

Alternatively, each grouping of two dwelling units shall be separated from an adjacent dwelling unit or an adjacent grouping of two dwelling units by a common wall assembly having a fire resistance rating of not less than two hours when tested in accordance with ASTM E119 or UL 263 and/or a floor ceiling assembly having a fire resistance rating of two hours when tested in accordance with ASTM E119 or UL 263. This option is only permissible if the common wall does not contain plumbing or mechanical equipment, ducts or vents in the cavity of the common wall. The common wall shall be rated for fire exposure from both sides and shall extend to and be tight against exterior walls and the underside of the roof sheathing. Penetrations of electrical outlet boxes shall be in accordance with Section 302.4.

Additionally, within any grouping of two dwelling units, separated as indicated above, the individual dwelling units shall be separated vertically and horizontally from adjacent dwelling units by wall and/or floor assemblies having a fire resistance rating of not less than one hour when tested in accordance with ASTM E119 or UL 263 .

When assemblies are required to be fire-resistance-rated, the supporting construction of such assemblies shall have an equal or greater fire-resistive rating.

302.2.1 Continuity. The fire-resistance-rated wall or assembly separating townhouses shall be continuous from the foundation to the underside of the roof sheathing, deck or slab. The fire-resistance rating shall extend the full length of the wall or assembly, including wall extensions through and separating attached enclosed accessory structures.

302.2.2 Parapets. Parapets constructed in accordance with Section 302.2.3 shall be constructed for townhouses as an extension of exterior walls or common walls in accordance with the following:

1. Where roof surfaces adjacent to the wall or walls are at the same elevation, the parapet shall extend not less than 30 inches (762 mm) above the roof surfaces.

2. Where roof surfaces adjacent to the wall or walls are at different elevations and the higher roof is not more than 30 inches (762 mm) above the lower roof, the parapet shall extend not less than 30 inches (762 mm) above the lower roof surface.

   Exception: A parapet is not required in the two cases above when the roof is covered with a minimum class C roof covering, and the roof decking or sheathing is of noncombustible materials or approved fire-retardant-treated wood for a distance of 4 feet (1219 mm) on each side of the wall or walls, or one layer of $^{5}/_{8}$-inch (15.9 mm) Type X gypsum board is installed directly beneath the roof decking or sheathing, supported by a minimum of nominal 2-inch (51 mm) ledgers attached to the sides of the roof framing members, for a minimum distance of 4 feet (1219 mm) on each side of the wall or walls.

3. A parapet is not required where roof surfaces adjacent to the wall or walls are at different elevations and the higher roof is more than 30 inches (762 mm) above the lower roof. The common wall construction from the lower roof to the underside of the higher roof deck shall have not less than a 1-hour fire-resistance rating. The wall shall be rated for exposure from both sides.

TABLE 302.1
EXTERIOR WALLS

EXTERIOR WALL ELEMENT		MINIMUM FIRE-RESISTANCE RATING	MINIMUM FIRE SEPARATION DISTANCE
Walls	(Fire-resistance rated)	1 hour-tested in accordance with ASTM E 119 or UL 263 with exposure *from* both sides	< 5 feet
	(Not fire-resistance rated)	0 hours	≥ 5 feet
Projections	(Fire-resistance rated)	1 hour on the underside	≥ 2 feet to 5 feet
	(Not fire-resistance rated)	0 hours	5 feet
Openings in walls	Not allowed	N/A	< 3 feet
	25% maximum of wall area	0 hours	3 feet
	Unlimited	0 hours	5 feet
Penetrations	All	Comply with Section *302.4*	< 5 feet
		None required	5 feet

For SI: 1 foot = 304.8 mm.
N/A = Not Applicable.

302.2.3 Parapet construction. Parapets shall have the same fire-resistance rating as that required for the supporting wall or walls. On any side adjacent to a roof surface, the parapet shall have noncombustible faces for the uppermost 18 inches (457 mm), to include counterflashing and coping materials. Where the roof slopes toward a parapet at slopes greater than 2 units vertical in 12 units horizontal (16.7-percent slope), the parapet shall extend to the same height as any portion of the roof within a distance of 3 feet (914 mm), but in no case shall the height be less than 30 inches (762 mm).

302.2.4 Structural independence. Each individual *dwelling unit* shall be structurally independent.

Exceptions:

1. Foundations supporting exterior walls or common walls.

2. Structural roof and wall sheathing from each unit may fasten to the common wall framing.

3. Nonstructural wall and roof coverings.

4. Flashing at termination of roof covering over common wall.

5. *Dwelling units* separated by a common *2*-hour fire-resistance-rated wall as provided in Section 302.2 .

6. *Dwelling units stacked vertically.*

302.3 Two-family dwellings. Dwelling units in two-family dwellings shall be separated from each other by wall and/or floor assemblies having not less than a 1-hour fire-resistance rating when tested in accordance with ASTM E 119 or UL 263. Fire-resistance-rated floor-ceiling and wall assemblies shall extend to and be tight against the exterior wall, and wall assemblies shall extend from the foundation to the underside of the roof sheathing.

Exceptions:

A fire-resistance rating of ½ hour shall be permitted in buildings equipped throughout with an automatic sprinkler system installed in accordance with NFPA 13.

302.3.1 Supporting construction. When floor assemblies are required to be fire-resistance rated, the supporting construction of such assemblies shall have an equal or greater fire-resistance rating.

302.4 Dwelling unit rated penetrations. Penetrations of wall or floor/ceiling assemblies required to be fire-resistance rated in accordance with Section 302.2 or 302.3 shall be protected in accordance with this section.

302.4.1 Through penetrations. Through penetrations of fire-resistance-rated wall or floor assemblies shall comply with Section 302.4.1.1 or 302.4.1.2.

Exception: Where the penetrating items are steel, ferrous or copper pipes, tubes or conduits, the annular space shall be protected as follows:

1. In concrete or masonry wall or floor assemblies, concrete, grout or mortar shall be permitted where installed to the full thickness of

the wall or floor assembly or the thickness required to maintain the fire-resistance rating, provided:

1.1 The nominal diameter of the penetrating item is a maximum of 6 inches (152 mm); and

1.2 The area of the opening through the wall does not exceed 144 square inches (92 900 mm^2).

2 The material used to fill the annular space shall prevent the passage of flame and hot gases sufficient to ignite cotton waste where subjected to ASTM E 119 or UL 263 time temperature fire conditions under a minimum positive pressure differential of 0.01 inch of water (3 Pa) at the location of the penetration for the time period equivalent to the fire resistance rating of the construction penetrated.

302.4.1.1 Fire-resistance-rated assembly. Penetrations shall be installed as tested in the approved fire-resistance-rated assembly.

302.4.1.2 Penetration firestop system. Penetrations shall be protected by an approved penetration firestop system installed as tested in accordance with ASTM E 814 or UL 1479, with a minimum positive pressure differential of 0.01 inch of water (3 Pa) and shall have an F rating of not less than the required fire-resistance rating of the wall or floor/ceiling assembly penetrated.

302.4.2 Membrane penetrations. Membrane penetrations shall comply with Section 302.4.1. Where walls are required to have a fire-resistance rating, recessed fixtures shall be installed so that the required fire-resistance rating will not be reduced.

Exceptions:

1. Membrane penetrations of maximum 2-hour fire-resistance-rated walls and partitions by steel electrical boxes that do not exceed 16 square inches (0.0103 m^2) in area provided the aggregate area of the openings through the membrane does not exceed 100 square inches (0.0645 m^2) in any 100 square feet $(9.29\ m)^2$ of wall area. The annular space between the wall membrane and the box shall

not exceed $^{1}/_{8}$ inch (3.1 mm). Such boxes on opposite sides of the wall shall be separated by one of the following:

1.1. By a horizontal distance of not less than 24 inches (610 mm) where the wall or partition is constructed with individual noncommunicating stud cavities;

1.2. By a horizontal distance of not less than the depth of the wall cavity when the wall cavity is filled with cellulose loose-fill, rockwool or slag mineral wool insulation;

1.3. By solid fire blocking in accordance with Section 302.11;

1.4. By protecting both boxes with listed putty pads; or

1.5. By other listed materials and methods.

2. Membrane penetrations by listed electrical boxes of any materials provided the boxes have been tested for use in fire-resistance-rated assemblies and are installed in accordance with the instructions included in the listing. The annular space between the wall membrane and the box shall not exceed $^{1}/_{8}$ inch (3.1 mm) unless listed otherwise. Such boxes on opposite sides of the wall shall be separated by one of the following:

2.1.By the horizontal distance specified in the listing of the electrical boxes;

2.2. By solid fireblocking in accordance with Section 302.11;

2.3. By protecting both boxes with listed putty pads; or

2.4. By other listed materials and methods.

3. The annular space created by the penetration of a fire sprinkler provided it is covered by a metal escutcheon plate.

302.5 Dwelling/garage opening/penetration protection. Openings and penetrations through the walls or ceilings separating the dwelling from the garage shall be in accordance with Sections 302.5.1 through 302.5.3.

302.5.1 Opening protection. Openings from a private garage directly into a room used for sleeping purposes shall not be permitted. Other openings between the garage and residence shall be equipped with solid wood doors not less than $1^3/_8$ inches (35 mm) in thickness, solid or honeycomb core steel doors not less than $1^3/_8$ inches (35 mm) thick, or 20-minute fire-rated doors.

302.5.2 Duct penetration. Ducts in the garage and ducts penetrating the walls or ceilings separating the dwelling from the garage shall be constructed of a minimum No. 26 gage (0.48 mm) sheet steel or other approved material and shall have no openings into the garage.

302.5.3 Other penetrations. Penetrations through the separation required in Section 302.6 shall be protected as required by Section 302.11, Item 4.

302.6 Dwelling/garage fire separation. The garage shall be separated as required by Table 302.6. Openings in garage walls shall comply with Section 302.5. This provision does not apply to garage walls that are perpendicular to the adjacent dwelling unit wall.

TABLE 302.6
DWELLING/GARAGE SEPARATION *1.*

SEPARATION	MATERIAL
From the residence and attics	Not less than ½-inch gypsum board or equivalent applied to the garage side
From all habitable rooms above the garage	Not less than $^5/_8$-inch Type X gypsum board or equivalent
Structure(s) supporting floor/ceiling assemblies used for separation required by this section	Not less than ½-inch gypsum board or equivalent
Garages located less than 3 feet from a dwelling unit on the same lot	Not less than ½-inch gypsum board or equivalent applied to the interior side of exterior walls that are within this area

For SI: 1 inch = 25.4 mm, 1 foot = 304.8 mm.
1. To determine fire resistance equivalents, refer to section 302.14

302.7 Under-stair protection. Enclosed accessible space under stairs shall have walls, under-stair surface and any soffits protected on the enclosed side with ½-inch (12.7 mm) gypsum board.

302.8 Foam plastics. For requirements for foam plastics see Section 316.

302.9 Flame spread index and smoke-developed index for wall and ceiling finishes. Flame spread and smoke index for wall and ceiling finishes shall be in accordance with Sections 302.9.1 through 302.9.4.

302.9.1 Flame spread index. Wall and ceiling finishes shall have a flame spread index of not greater than 200.

> **Exception**: Flame spread index requirements for finishes shall not apply to trim defined as picture molds, chair rails, baseboards and handrails; to doors and windows or their frames; or to materials that are less than $^{1}/_{28}$ inch (0.91 mm) in thickness cemented to the surface of walls or ceilings if these materials exhibit flame spread index values no greater than those of paper of this thickness cemented to a noncombustible backing.

302.9.2 Smoke-developed index. Wall and ceiling finishes shall have a smoke-developed index of not greater than 450.

302.9.3 Testing. Tests shall be made in accordance with ASTM E 84 or UL 723.

302.9.4 Alternate test method. As an alternate to having a flame-spread index of not greater than 200 and a smoke developed index of not greater than 450 when tested in accordance with ASTM E 84 or UL 723, wall and ceiling finishes, other than textiles, shall be permitted to be tested in accordance with NFPA 286. Materials tested in accordance with NFPA 286 shall meet the following criteria:

During the 40 kW exposure, the interior finish shall comply with Item 1. During the 160 kW exposure, the interior finish shall comply with Item 2. During the entire test, the interior finish shall comply with Item 3.

1. During the 40 kW exposure, flames shall not spread to the ceiling.

2. During the 160 kW exposure, the interior finish shall comply with the following:

    2.1 Flame shall not spread to the outer extremity of the sample on any wall or ceiling.

    2.2 Flashover, as defined in NFPA 286, shall not occur.

3 The total smoke released throughout the NFPA 286 test shall not exceed 1,000 m^2.

302.10 Flame spread index and smoke developed index for insulation. Flame spread and smoke developed index for insulation shall be in accordance with Sections 302.10.1 through 302.10.5.

302.10.1 Insulation. Insulation materials, including facings, such as vapor retarders and vapor-permeable membranes installed within floor-ceiling assemblies, roof-ceiling assemblies, wall assemblies, crawl spaces and attics shall have a flame spread index not to exceed 25 with an accompanying smoke-developed index not to exceed 450 when tested in accordance with ASTM E 84 or UL 723.

Exceptions:

1. When such materials are installed in concealed spaces, the flame spread index and smoke-developed index limitations do not apply to the facings, provided that the facing is installed in substantial contact with the unexposed surface of the ceiling, floor or wall finish.

2. Cellulose loose-fill insulation, which is not spray applied, complying with the requirements of Section 302.10.3, shall only be required to meet the smoke-developed index of not more than 450.

302.10.2 Loose-fill insulation. Loose-fill insulation materials that cannot be mounted in the ASTM E 84 or UL 723 apparatus without a screen or artificial supports shall comply with the flame spread and smoke-developed limits of Section 302.10.1 when tested in accordance with CAN/ULC S102.2.

Exception: Cellulose loose-fill insulation shall not be required to be tested in accordance with CAN/ULC S102.2, provided such insulation complies with the requirements of Section 302.10.1 and Section 302.10.3.

302.10.3 Cellulose loose-fill insulation. Cellulose loose-fill insulation shall comply with CPSC 16 CFR, Parts 1209 and 1404. Each package of such insulating material shall be clearly labeled in accordance with CPSC 16 CFR, Parts 1209 and 1404.

302.10.4 Exposed attic insulation. All exposed insulation materials installed on attic floors shall have a critical radiant flux not less than 0.12 watt per square centimeter.

302.10.5 Testing. Tests for critical radiant flux shall be made in accordance with ASTM E 970.

302.11 Fireblocking. In combustible construction, fireblocking shall be provided to cut off all concealed draft openings (both vertical and horizontal) and to form an effective fire barrier between stories, and between a top story and the roof space.

Fireblocking shall be provided in wood-frame construction in the following locations:

1. In concealed spaces of stud walls and partitions, including furred spaces and parallel rows of studs or staggered studs, as follows:

   1.1 Vertically at the ceiling and floor levels.

   1.2 Horizontally at intervals not exceeding 10 feet (3048 mm).

2 At all interconnections between concealed vertical and horizontal spaces such as occur at soffits, drop ceilings and cove ceilings.

3 In concealed spaces between stair stringers at the top and bottom of the run. Enclosed spaces under stairs shall comply with Section 302.7.

4 At openings around vents, pipes, ducts, cables and wires at ceiling and floor level, with an approved material to resist the free passage of flame and products of combustion. The material filling this annular space shall not be required to meet the ASTM E 136 requirements.

5 For the fireblocking of chimneys and fireplaces, see Section 1003.19.

6 *In buildings or structures with more than one dwelling, fireblocking* of cornices is required at the line of dwelling unit separation.

302.11.1 Fireblocking materials. Except as provided in Section 302.11, Item 4, fireblocking shall consist of the following materials:

1. Two-inch (51 mm) nominal lumber.

2. Two thicknesses of 1-inch (25.4 mm) nominal lumber with broken lap joints.

3. One thickness of $^{23}/_{32}$-inch (18.3 mm) wood structural panels with joints backed by $^{23}/_{32}$-inch (18.3 mm) wood structural panels.

4. One thickness of ¾-inch (19.1 mm) particleboard with joints backed by ¾-inch (19.1 mm) particleboard.

5. One-half-inch (12.7 mm) gypsum board.

6. One-quarter-inch (6.4 mm) cement-based millboard.

7. Batts or blankets of mineral wool or glass fiber or other approved materials installed in such a manner as to be securely retained in place.

302.11.1.1 Batts or blankets of mineral or glass fiber. Batts or blankets of mineral or glass fiber or other approved nonrigid materials shall be permitted for compliance with the 10-foot (3048 mm) horizontal fireblocking in walls constructed using parallel rows of studs or staggered studs.

302.11.1.2 Unfaced fiberglass. Unfaced fiberglass batt insulation used as fireblocking shall fill the entire cross section of the wall cavity to a minimum height of 16 inches (406 mm) measured vertically. When piping, conduit or similar obstructions are encountered, the insulation shall be packed tightly around the obstruction.

302.11.1.3 Loose-fill insulation material. Loose-fill insulation material shall not be used as a fireblock unless specifically tested in the form and manner intended for use to demonstrate its ability to remain in place and to retard the spread of fire and hot gases.

302.11.2 Fireblocking integrity. The integrity of all fireblocks shall be maintained.

302.12 Draftstopping. In combustible construction where there is usable space both above and below the concealed space of a floor/ceiling assembly, draftstops shall be installed so that the area of the concealed space does not exceed 1,000 square feet (92.9 m^2). Draftstopping shall divide the concealed space into approximately equal areas. Where the assembly is enclosed by a floor membrane above and a ceiling membrane below, draftstopping shall be provided in floor/ceiling assemblies under the following circumstances:

1. Ceiling is suspended under the floor framing.

2. Floor framing is constructed of truss-type open-web or perforated members.

302.12.1 Materials. Draftstopping materials shall not be less than ½-inch (12.7 mm) gypsum board, $^{3}/_{8}$-inch (9.5 mm) wood structural panels or other approved materials adequately supported. Draftstopping shall be installed parallel to the floor framing members unless otherwise approved by the building official. The integrity of the draftstops shall be maintained.

302.13 Combustible insulation clearance. Combustible insulation shall be separated a minimum of 3 inches (76 mm) from recessed luminaires, fan motors and other heat-producing devices.

Exception: Where heat-producing devices are listed for lesser clearances, combustible insulation complying with the listing requirements shall be separated in accordance with the conditions stipulated in the listing.

Recessed luminaires installed in the building thermal envelope shall meet the requirements of Section 1102.4.5.

302.14 *Fire resistance determination for assemblies and materials.* *When this chapter requires a fire resistive assembly or component, and there is no available evidence matching the assembly or component to a rated assembly or component tested in accordance with ASTM E 119 or UL 263, the fire resistance rating of the assembly or component can be evaluated by using section 721 in the "Ohio Building Code" or "Resource A, Guidelines on Fire Ratings of Archaic Materials and Assemblies in the International Existing Buildings Code."*

When this code requires an assembly or component to serve in a fire resistive manner but the assembly or component is not required to be fire resistance rated, equivalent fire resistive values can be derived from section 721 in the "Ohio Building Code" or "Resource A, Guidelines on Fire Ratings of Archaic Materials and Assemblies in the International Existing Building Code."

SECTION 303
LIGHT, VENTILATION AND HEATING

303.1 Habitable rooms. All habitable rooms shall have an aggregate glazing area of not less than 8 percent of the floor area of such rooms. Natural ventilation shall be through windows, doors, louvers or other approved openings to the outdoor air. Such openings shall be provided with ready access or shall otherwise be readily controllable by the building occupants.

The minimum openable area to the outdoors shall be 4 percent of the floor area being ventilated.

Exceptions:

1. The glazed areas need not be openable where the opening is not required by Section 310 and an approved mechanical ventilation system capable of producing 0.35 air change per hour in the room is installed or a whole-house mechanical ventilation system is installed capable of supplying outdoor ventilation air of 15 cubic feet per minute (cfm) (78 L/s) per occupant computed on the basis of two occupants for the first bedroom and one occupant for each additional bedroom.

2. The glazed areas need not be installed in rooms where Exception 1 above is satisfied and artificial light is provided capable of producing an average illumination of 6 footcandles (65 lux) over the area of the room at a height of 30 inches (762 mm) above the floor level.

3. Use of sunroom additions and patio covers, as defined in Section 202, shall be permitted for natural ventilation if in excess of 40 percent of the exterior sunroom walls are open, or are enclosed only by insect screening.

303.2 Adjoining rooms. For the purpose of determining light and ventilation requirements, any room shall be considered as a portion of an adjoining room when at least one-half of the area of the common wall is open and unobstructed and provides an opening of not less than one-tenth of the floor area of the interior room but not less than 25 square feet (2.3 m^2).

Exception: Openings required for light and/or ventilation shall be permitted to open into a thermally isolated sunroom addition or patio cover, provided that there is an openable area between the adjoining room and the sunroom addition or patio cover of not less than one-tenth of the floor area of the

interior room but not less than 20 square feet (2 m^2). The minimum openable area to the outdoors shall be based upon the total floor area being ventilated.

303.3 Bathrooms. Bathrooms, water closet compartments and other similar rooms shall be provided with aggregate glazing area in windows of not less than 3 square feet (0.3 m^2), one-half of which must be openable.

Exception: The glazed areas shall not be required where artificial light and a mechanical ventilation system are provided. The minimum ventilation rates shall be 50 cubic feet per minute (24 L/s) for intermittent ventilation or 20 cubic feet per minute (10 L/s) for continuous ventilation. Ventilation air from the space shall be exhausted directly to the outside.

303.4 Opening location. Outdoor intake and exhaust openings shall be located in accordance with Sections 303.4.1 and 303.4.2.

303.4.1 Intake openings. Mechanical and gravity outdoor air intake openings shall be located a minimum of 10 feet (3048 mm) from any hazardous or noxious contaminant, such as vents, chimneys, plumbing vents, streets, alleys, parking lots and loading docks, except as otherwise specified in this code. Where a source of contaminant is located within 10 feet (3048 mm) of an intake opening, such opening shall be located a minimum of 2 feet (610 mm) below the contaminant source.

For the purpose of this section, the exhaust from dwelling unit toilet rooms, bathrooms and kitchens shall not be considered as hazardous or noxious.

303.4.2 Exhaust openings. Exhaust air shall not be directed onto walkways.

303.5 Outside opening protection. Air exhaust and intake openings that terminate outdoors shall be protected with corrosion-resistant screens, louvers or grilles having a minimum opening size of ¼ inch (6 mm) and a maximum opening size of ½ inch (13 mm), in any dimension. Openings shall be protected against local weather conditions. Outdoor air exhaust and intake openings shall meet the provisions for exterior wall opening protectives in accordance with this code.

303.6 Stairway illumination. All interior and exterior stairways shall be provided with a means to illuminate the stairs, including the landings and treads. Interior stairways shall be provided with an artificial light source located in the immediate vicinity of each landing of the stairway. For interior stairs the artificial light

sources shall be capable of illuminating treads and landings to levels not less than 1 foot-candle (11 lux) measured at the center of treads and landings. Exterior stairways shall be provided with an artificial light source located in the immediate vicinity of the top landing of the stairway. Exterior stairways providing access to a basement from the outside grade level shall be provided with an artificial light source located in the immediate vicinity of the bottom landing of the stairway.

Exception: An artificial light source is not required at the top and bottom landing, provided an artificial light source is located directly over each stairway section.

303.6.1 Light activation. Where lighting outlets are installed in interior stairways, there shall be a wall switch at each floor level to control the lighting outlet where the stairway has six or more risers. The illumination of exterior stairways shall be controlled from inside the dwelling unit.

Exception: Lights that are continuously illuminated or automatically controlled.

303.7 Required glazed openings. Required glazed openings shall open directly onto a street or public alley, or a yard or court located on the same lot as the building.

Exceptions:

1. Required glazed openings may face into a roofed porch where the porch abuts a street, yard or court and the longer side of the porch is at least 65 percent unobstructed and the ceiling height is not less than 7 feet (2134 mm).

2. Eave projections shall not be considered as obstructing the clear open space of a yard or court.

3. Required glazed openings may face into the area under a deck, balcony, bay or floor cantilever provided a clear vertical space at least 36 inches (914 mm) in height is provided.

303.7.1 Sunroom additions. Required glazed openings shall be permitted to open into sunroom additions or patio covers that abut a street, yard or court if in excess of 40 percent of the exterior sunroom walls are open, or are enclosed

only by insect screening, and the ceiling height of the sun-room is not less than 7 feet (2134 mm).

303.8 Required heating. When the winter design temperature in Table 301.2(1) is below 60°F (16°C), every dwelling unit shall be provided with heating facilities capable of maintaining a minimum room temperature of 68°F (20°C) at a point 3 feet (914 mm) above the floor and 2 feet (610 mm) from exterior walls in all habitable rooms at the design temperature. The installation of one or more portable space heaters shall not be used to achieve compliance with this section.

SECTION 304
MINIMUM ROOM AREAS

304.1 Minimum area. Every dwelling unit shall have at least one habitable room that shall have not less than 120 square feet (11 m^2) of gross floor area.

304.2 Other rooms. Other habitable rooms shall have a floor area of not less than 70 square feet (6.5 m^2).

Exception: Kitchens.

304.3 Minimum dimensions. Habitable rooms shall not be less than 7 feet (2134 mm) in any horizontal dimension.

Exception: Kitchens.

304.4 Height effect on room area. Portions of a room with a sloping ceiling measuring less than 5 feet (1524 mm) or a furred ceiling measuring less than 7 feet (2134 mm) from the finished floor to the finished ceiling shall not be considered as contributing to the minimum required habitable area for that room.

SECTION 305
CEILING HEIGHT

305.1 Minimum height. Habitable space, hallways, bathrooms, toilet rooms, laundry rooms and portions of basements containing these spaces shall have a ceiling height of not less than 7 feet (2134 mm).

Exceptions:

1. For rooms with sloped ceilings, at least 50 percent of the required floor area of the room must have a ceiling height of at least 7 feet (2134 mm) and no portion of the required floor area may have a ceiling height of less than 5 feet (1524 mm).
2. Bathrooms shall have a minimum ceiling height of 6 feet 8 inches (2032 mm) at the center of the front clearance area for fixtures as shown in Figure 307.1. The ceiling height above fixtures shall be such that the fixture is capable of being used for its intended purpose. A shower or tub equipped with a showerhead shall have a minimum ceiling height of 6 feet 8 inches (2032 mm) above a minimum area 30 inches (762 mm) by 30 inches (762 mm) at the showerhead.

305.1.1 Basements. Portions of basements that do not contain habitable space, hallways, bathrooms, toilet rooms and laundry rooms shall have a ceiling height of not less than 6 feet 8 inches (2032 mm).

Exceptions:

1. Beams, girders, ducts or other obstructions may project to within 6 feet 4 inches (1931 mm) of the finished floor.

2. Habitable spaces created in existing basements shall be permitted to have ceiling heights of not less than 6 feet 8 inches (2032 mm). Obstructions may project to within 6 feet, 4 inches of the basement floor.

SECTION 306
SANITATION

306.1 Toilet facilities. Every dwelling unit shall be provided with a water closet, lavatory, and a bathtub or shower.

306.2 Kitchen. Each dwelling unit shall be provided with a kitchen area and every kitchen area shall be provided with a sink.

306.3 Sewage disposal. All plumbing fixtures shall be connected to a sanitary sewer or to an approved private sewage disposal system.

306.4 Water supply to fixtures. All plumbing fixtures shall be connected to an approved water supply. Kitchen sinks, lavatories, bathtubs, showers, bidets,

laundry tubs and washing machine outlets shall be provided with hot and cold water.

SECTION 307
TOILET, BATH AND SHOWER SPACES

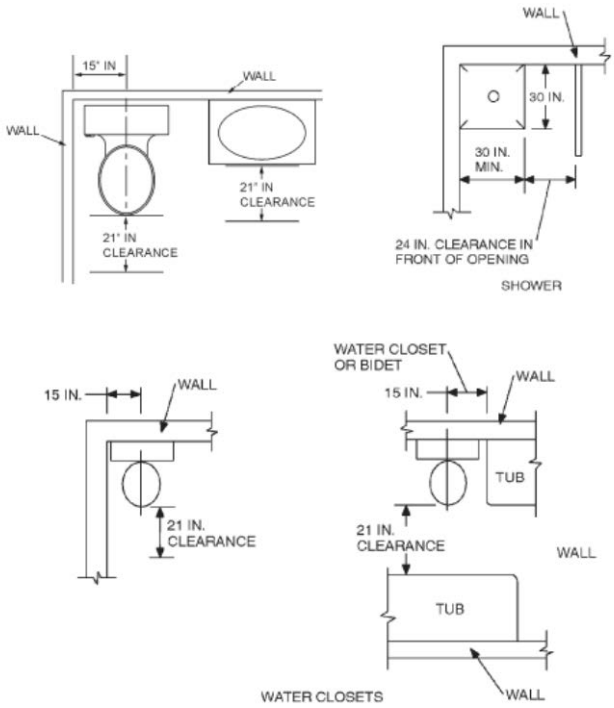

307.1 Space required. Fixtures shall be spaced in accordance with Figure 307.1, and in accordance with the requirements of *the plumbing code*.

For SI: 1 inch = 25.4 mm.

FIGURE 307.1
MINIMUM FIXTURE CLEARANCES

307.2 Bathtub and shower spaces. Bathtub and shower floors and walls above bathtubs with installed shower heads and in shower compartments shall be finished with a nonabsorbent surface. Such wall surfaces shall extend to a height of not less than 6 feet (1829 mm) above the floor.

SECTION 308
GLAZING

308.1 Identification. Except as indicated in Section 308.1.1 each pane of glazing installed in hazardous locations as defined in Section 308.4 shall be provided with a manufacturer's designation specifying who applied the designation, designating the type of glass and the safety glazing standard with which it complies, which is visible in the final installation. The designation shall be acid etched, sandblasted, ceramic-fired, laser etched, embossed, or be of a type which once applied cannot be removed without being destroyed. A label shall be permitted in lieu of the manufacturer's designation.

Exceptions:

1. For other than tempered glass, manufacturer's designations are not required provided the building official approves the use of a certificate, affidavit or other evidence confirming compliance with this code.
2. Tempered spandrel glass is permitted to be identified by the manufacturer with a removable paper designation.

308.1.1 Identification of multiple assemblies. Multipane assemblies having individual panes not exceeding 1 square foot (0.09 m^2) in exposed area shall have at least one pane in the assembly identified in accordance with Section 308.1. All other panes in the assembly shall be labeled "CPSC 16 CFR 1201" or "ANSI Z97.1" as appropriate.

308.2 Louvered windows or jalousies. Regular, float, wired or patterned glass in jalousies and louvered windows shall be no thinner than nominal $^{3}/_{16}$ inch (5 mm) and no longer than 48 inches (1219 mm). Exposed glass edges shall be smooth.

308.2.1 Wired glass prohibited. Wired glass with wire exposed on longitudinal edges shall not be used in jalousies or louvered windows.

308.3 Human impact loads. Individual glazed areas, including glass mirrors in hazardous locations such as those indicated as defined in Section 308.4, shall pass the test requirements of Section 308.3.1.

Exceptions:

1. Louvered windows and jalousies shall comply with Section 308.2.

2. Mirrors and other glass panels mounted or hung on a surface that provides a continuous backing support.

3. Glass unit masonry complying with Section 610.

308.3.1 Impact test. Where required by other sections of the code, glazing shall be tested in accordance with CPSC 16 CFR 1201. Glazing shall comply with the test criteria for Category I or II as indicated in Table 308.3.1(1).

Exception: Glazing not in doors or enclosures for hot tubs, whirlpools, saunas, steam rooms, bathtubs and showers shall be permitted to be tested in accordance with ANSI Z97.1. Glazing shall comply with the test criteria for Class A or B as indicated in Table 308.3.1(2).

TABLE 308.3.1(1)
MINIMUM CATEGORY CLASSIFICATION OF GLAZING USING CPSC 16 CFR 1201

EXPOSED SURFACE AREA OF ONE SIDE OF ONE LITE	GLAZING IN STORM OR COMBINATION DOORS (Category Class)	GLAZING IN DOORS (Category Class)	GLAZED PANELS REGULATED BY ITEM ~~7~~ 3 OF SECTION 308.4 (Category Class)	GLAZED PANELS REGULATED BY ITEM ~~6~~ 2 OF SECTION 308.4 (Category Class)	GLAZING IN DOORS AND ENCLOSURES REGULATED BY ITEM 5 OF SECTION 308.4 (Category Class)	SLIDING GLASS DOORS PATIO TYPE (Category Class)
9 square feet or less	I	I	NR	I	II	II
More than 9 square feet	II	II	II	II	II	II

For SI: 1 square foot = 0.0929 m^2.
NR means "No Requirement."

TABLE 308.3.1(2)
MINIMUM CATEGORY CLASSIFICATION OF GLAZING USING ANSI Z97.1

EXPOSED SURFACE AREA OF ONE SIDE OF ONE LITE	GLAZED PANELS REGULATED BY ITEM ~~7~~3 OF SECTION 308.4 (Category Class)	GLAZED PANELS REGULATED BY ITEM ~~6~~ 2 OF SECTION 308.4 (Category Class)	DOORS AND ENCLOSURES REGULATED BY ITEM 5 OF SECTION 308.4[a] (Category Class)
9 square feet or less	No requirement	B	A
More than 9 square feet	A	A	A

For SI: 1 square foot = 0.0929 m^2.
a. Use is permitted only by the exception to Section 308.3.1.

308.4 Hazardous locations. The following shall be considered specific hazardous locations for the purposes of glazing:

1. Glazing in all fixed and operable panels of swinging, sliding and bifold doors.

Exceptions:

1. Glazed openings of a size through which a 3-inch diameter (76 mm) sphere is unable to pass.

2. Decorative glazing.

2. Glazing in an individual fixed or operable panel adjacent to a door where the nearest vertical edge is within a 24-inch (610 mm) arc of the door in a closed position and whose bottom edge is less than 60 inches (1524 mm) above the floor or walking surface.

Exceptions:

1. Decorative glazing.

2. When there is an intervening wall or other permanent barrier between the door and the glazing.

3. Glazing in walls on the latch side of and perpendicular to the plane of the door in a closed position.

4. Glazing adjacent to a door where access through the door is to a closet or storage area 3 feet (914 mm) or less in depth.

5. Glazing that is adjacent to the fixed panel of patio doors.

3. Glazing in an individual fixed or operable panel that meets all of the following conditions:

3.1 The exposed area of an individual pane is larger than 9 square feet (0.836 m^2); and

3.2 The bottom edge of the glazing is less than 18 inches (457 mm) above the floor; and

3.3 The top edge of the glazing is more than 36 inches (914 mm) above the floor; and

3.4 One or more walking surfaces are within 36 inches (914 mm), measured horizontally and in a straight line, of the glazing.

Exceptions:

1. Decorative glazing.

2. When a horizontal rail is installed on the accessible side(s) of the glazing 34 to 38 inches (864 to 965) above the walking surface. The rail shall be capable of withstanding a horizontal load of 50 pounds per linear foot (730 N/m) without contacting the glass and be a minimum of 1½ inches (38 mm) in cross sectional height.

3. Outboard panes in insulating glass units and other multiple glazed panels when the bottom edge of the glass is 25 feet (7620 mm) or more above grade, a roof, walking surfaces or other horizontal [within 45 degrees (0.79 rad) of horizontal] surface adjacent to the glass exterior.

4. All glazing in railings regardless of area or height above a walking surface. Included are structural baluster panels and nonstructural infill panels.

5. Glazing in enclosures for or walls facing hot tubs, whirlpools, saunas, steam rooms, bathtubs and showers where the bottom exposed edge of the glazing is less than 60 inches (1524 mm) measured vertically above any standing or walking surface.

   Exception: Glazing that is more than 60 inches (1524 mm), measured horizontally and in a straight line, from the waters edge of a hot tub, whirlpool or bathtub.

6. Glazing in walls and fences adjacent to indoor and outdoor swimming pools, hot tubs and spas where the bottom edge of the glazing is less than 60 inches (1524 mm) above a walking surface and within 60 inches (1524 mm), measured horizontally and in a straight line, of the water's edge. This shall apply to single glazing and all panes in multiple glazing.

7. Glazing adjacent to stairways, landings and ramps within 36 inches (914 mm) horizontally of a walking surface when the exposed surface of the glazing is less than 60 inches (1524 mm) above the plane of the adjacent walking surface.

   Exceptions:

1. When a rail is installed on the accessible side(s) of the glazing 34 to 38 inches (864 to 965 mm) above the walking surface. The rail shall be capable of withstanding a horizontal load of 50 pounds per linear foot (730 N/m) without contacting the glass and be a minimum of 1½ inches (38 mm) in cross sectional height.

2. The side of the stairway has a guardrail or handrail, including balusters or in-fill panels, complying with Sections 311.7.7 and 312 and the plane of the glazing is more than 18 inches (457 mm) from the railing; or

3. When a solid wall or panel extends from the plane of the adjacent walking surface to 34 inches (863 mm) to 36 inches (914 mm) above the walking surface and the construction at the top of that wall or panel is capable of withstanding the same horizontal load as a guard.

8. Glazing adjacent to stairways within 60 inches (1524 mm) horizontally of the bottom tread of a stairway in any direction when the exposed surface of the glazing is less than 60 inches (1524 mm) above the nose of the tread.

Exceptions:

1. The side of the stairway has a guardrail or handrail, including balusters or in-fill panels, complying with Sections 311.7.7 and 312 and the plane of the glass is more than 18 inches (457 mm) from the railing; or

2. When a solid wall or panel extends from the plane of the adjacent walking surface to 34 inches (864 mm) to 36 inches (914 mm) above the walking surface and the construction at the top of that wall or panel is capable of withstanding the same horizontal load as a guard.

308.5 Site built windows. Site built windows shall comply with Section 2404 of the *Ohio* Building Code.

308.6 Skylights and sloped glazing. Skylights and sloped glazing shall comply with the following sections.

308.6.1 Definitions.

SKYLIGHTS AND SLOPED GLAZING. Glass or other transparent or translucent glazing material installed at a slope of 15 degrees (0.26 rad) or more from vertical. Glazing materials in skylights, including unit skylights, solariums, sunrooms, roofs and sloped walls are included in this definition.

UNIT SKYLIGHT. A factory assembled, glazed fenestration unit, containing one panel of glazing material, that allows for natural daylighting through an opening in the roof assembly while preserving the weather-resistant barrier of the roof.

308.6.2 Permitted materials. The following types of glazing may be used:

1. Laminated glass with a minimum 0.015-inch (0.38 mm) polyvinyl butyral interlayer for glass panes 16 square feet (1.5 m^2) or less in area located such that the highest point of the glass is not more than 12 feet (3658 mm) above a walking surface or other accessible area; for higher or larger sizes, the minimum interlayer thickness shall be 0.030 inch (0.76 mm).

2. Fully tempered glass.

3. Heat-strengthened glass.

4. Wired glass.

5. Approved rigid plastics.

308.6.3 Screens, general. For fully tempered or heat-strengthened glass, a retaining screen meeting the requirements of Section 308.6.7 shall be installed below the glass, except for fully tempered glass that meets either condition listed in Section 308.6.5.

308.6.4 Screens with multiple glazing. When the inboard pane is fully tempered, heat-strengthened or wired glass, a retaining screen meeting the requirements of Section 308.6.7 shall be installed below the glass, except for either condition listed in Section 308.6.5. All other panes in the multiple glazing may be of any type listed in Section 308.6.2.

308.6.5 Screens not required. Screens shall not be required when fully tempered glass is used as single glazing or the inboard pane in multiple glazing and either of the following conditions are met:

1. Glass area 16 square feet (1.49 m^2) or less. Highest point of glass not more than 12 feet (3658 mm) above a walking surface or other accessible area, nominal glass thickness not more than $^3/_{16}$ inch (4.8 mm), and (for multiple glazing only) the other pane or panes fully tempered, laminated or wired glass.

2. Glass area greater than 16 square feet (1.49 m^2). Glass sloped 30 degrees (0.52 rad) or less from vertical, and highest point of glass not more than 10 feet (3048 mm) above a walking surface or other accessible area.

308.6.6 Glass in greenhouses. Any glazing material is permitted to be installed without screening in the sloped areas of greenhouses, provided the greenhouse height at the ridge does not exceed 20 feet (6096 mm) above grade.

308.6.7 Screen characteristics. The screen and its fastenings shall be capable of supporting twice the weight of the glazing, be firmly and substantially fastened to the framing members, and have a mesh opening of no more than 1 inch by 1 inch (25 mm by 25 mm).

308.6.8 Curbs for skylights. All unit skylights installed in a roof with a pitch flatter than three units vertical in 12 units horizontal (25-percent slope) shall be mounted on a curb extending at least 4 inches (102 mm) above the plane of the roof unless otherwise specified in the manufacturer's installation instructions.

308.6.9 Testing and labeling. Unit skylights shall be tested by an approved independent laboratory, and bear a label identifying manufacturer, performance grade rating and approved inspection agency to indicate compliance with the requirements of AAMA/WDMA/CSA 101/I.S.2/A440.

SECTION 309
GARAGES AND CARPORTS

309.1 Floor surface. Garage floor surfaces shall be of approved noncombustible material.

The area of floor used for parking of automobiles or other vehicles shall be sloped to facilitate the movement of liquids to a drain or toward the main vehicle entry doorway.

309.2 Carports. Carports shall be open on at least two sides. Carport floor surfaces shall be of approved noncombustible material. Carports not open on at least two sides shall be considered a garage and shall comply with the provisions of this section for garages.

Exception: Asphalt surfaces shall be permitted at ground level in carports.

The area of floor used for parking of automobiles or other vehicles shall be sloped to facilitate the movement of liquids to a drain or toward the main vehicle entry doorway.

309.3 Flood hazard areas. For buildings located in flood hazard areas as established by Table 301.2(1), garage floors shall be:

1. Elevated to or above the design flood elevation as determined in Section 322; or

2. Located below the design flood elevation provided they are at or above grade on at least one side, are used solely for parking, building access or storage, meet the requirements of Section 322 and are otherwise constructed in accordance with this code.

309.4 Automatic garage door openers. Automatic garage door openers, if provided, shall be listed in accordance with UL 325.

SECTION 310
EMERGENCY ESCAPE AND RESCUE OPENINGS

310.1 Emergency escape and rescue required. Every sleeping room shall have at least one operable emergency escape and rescue opening. Where emergency escape and rescue openings are provided they shall have a sill height of not more than 44 inches (1118 mm) above the floor. Where a door opening having a threshold below the adjacent ground elevation serves as an emergency escape and rescue opening and is provided with a bulkhead enclosure, the bulkhead enclosure shall comply with Section 310.3. The net clear opening dimensions required by this section shall be obtained by the normal operation of the emergency escape

and rescue opening from the inside. Emergency escape and rescue openings with a finished sill height below the adjacent ground elevation shall be provided with a window well in accordance with Section 310.2.

310.1.1 Minimum opening area. All emergency escape and rescue openings shall have a minimum net clear opening of 5.7 square feet (0.530 m^2).

Exception: Grade floor openings shall have a minimum net clear opening of 5 square feet (0.465 m^2).

310.1.2 Minimum opening height. The minimum net clear opening height shall be 24 inches (610 mm).

310.1.3 Minimum opening width. The minimum net clear opening width shall be 20 inches (508 mm).

310.1.4 Operational constraints. Emergency escape and rescue openings shall be operational from the inside of the room without the use of keys, tools or special knowledge.

310.1.5. Replacement windows. *Replacement windows installed in accordance with Section 113.6.1 shall not be required to comply with sections 310.1.1 through 310.1.3.*

310.2 Window wells. The minimum horizontal area of the window well shall be 9 square feet (0.9 m^2), with a minimum horizontal projection and width of 36 inches (914 mm). The area of the window well shall allow the emergency escape and rescue opening to be fully opened.

Exception: The ladder or steps required by Section 310.2.1 shall be permitted to encroach a maximum of 6 inches (152 mm) into the required dimensions of the window well.

310.2.1 Ladder and steps. Window wells with a vertical depth greater than 44 inches (1118 mm) shall be equipped with a permanently affixed ladder or steps usable with the window in the fully open position. Ladders or steps required by this section shall not be required to comply with Sections 311.7 and 311.8. Ladders or rungs shall have an inside width of at least 12 inches (305 mm), shall project at least 3 inches (76 mm) from the wall and shall be spaced not more than 18 inches (457 mm) on center vertically for the full height of the window well.

310.3 Bulkhead enclosures. Bulkhead enclosures shall provide direct access to the basement. The bulkhead enclosure with the door panels in the fully open position shall provide the minimum net clear opening required by Section 310.1.1. Bulkhead enclosures shall also comply with Section 311.7.9.2.

310.4 Bars, grilles, covers and screens. Bars, grilles, covers, screens or similar devices are permitted to be placed over emergency escape and rescue openings, bulkhead enclosures, or window wells that serve such openings, provided the minimum net clear opening size complies with Sections 310.1.1 to 310.1.3, and such devices shall be releasable or removable from the inside without the use of a key, tool, special knowledge or force greater than that which is required for normal operation of the escape and rescue opening.

310.5 Emergency escape windows under decks and porches. Emergency escape windows are allowed to be installed under decks and porches provided the location of the deck allows the emergency escape window to be fully opened and provides a path not less than 36 inches (914 mm) in height to a yard or court.

SECTION 311
MEANS OF EGRESS

311.1 Means of egress. All dwellings shall be provided with a means of egress as provided in this section. The means of egress shall provide a continuous and unobstructed path of vertical and horizontal egress travel from all portions of the dwelling to the exterior of the dwelling at the required egress door without requiring travel through a garage.

311.2 Egress door. At least one egress door shall be provided for each dwelling unit. The egress door shall be side-hinged, and shall provide a minimum clear width of 32 inches (813 mm) when measured between the face of the door and the stop, with the door open 90 degrees (1.57 rad). The minimum clear height of the door opening shall not be less than 78 inches (1981 mm) in height measured from the top of the threshold to the bottom of the stop. Other doors shall not be required to comply with these minimum dimensions. Egress doors shall be readily openable from inside the dwelling without the use of a key or special knowledge or effort.

311.2.1 Garage access doors. *Garages shall be served by at least one side-hinged door not less than 2 feet 6 inches (760 mm) in width and 6 feet 8*

inches (2032 mm) in height. Such door located between a dwelling and an attached garage shall be acceptable for meeting this requirement.

311.3 Floors and landings at exterior doors. There shall be a landing or floor on each side of each exterior door. The width of each landing shall not be less than the door served. Every landing shall have a minimum dimension of 36 inches (914 mm) measured in the direction of travel. Exterior landings shall be permitted to have a slope not to exceed ¼ unit vertical in 12 units horizontal (2-percent).

Exception: Exterior balconies less than 60 square feet (5.6 m^2) and only accessible from a door are permitted to have a landing less than 36 inches (914 mm) measured in the direction of travel.

311.3.1 Floor elevations at the required egress doors. Landings or floors at the required egress door shall not be more than 1½ inches (38 mm) lower than the top of the threshold.

Exception: The exterior landing or floor shall not be more than *8 ¼* inches (196 mm) below the top of the threshold provided the door does not swing over the landing or floor.

When exterior landings or floors serving the required egress door are not at grade, they shall be provided with access to grade by means of a ramp in accordance with Section 311.8 or a stairway in accordance with Section 311.7.

311.3.2 Floor elevations for other exterior doors. Doors other than the required egress door shall be provided with landings or floors not more than *8 ¼* inches (196 mm) below the top of the threshold.

Exception: A landing is not required where a stairway of two or fewer risers is located on the exterior side of the door, provided the door does not swing over the stairway.

311.3.3 Storm and screen doors. Storm and screen doors shall be permitted to swing over all exterior stairs and landings.

311.4 Vertical egress. Egress from *finished* levels including attics and basements not provided with an egress door in accordance with Section 311.2 shall be by a ramp in accordance with Section 311.8 or a stairway in accordance with Section 311.7.

311.5 Construction.

311.5.1 Attachment. Exterior landings, decks, balconies, stairs and similar facilities shall be positively anchored to the primary structure to resist both vertical and lateral forces or shall be designed to be self-supporting. Attachment shall not be accomplished by use of toenails or nails subject to withdrawal.

311.6 Hallways. The minimum width of a hallway shall be not less than 3 feet (914 mm).

311.7 Stairways.

311.7.1 Width. Stairways shall not be less than 36 inches (914 mm) in clear width at all points above the permitted handrail height and below the required headroom height. Handrails shall not project more than 4.5 inches (114 mm) on either side of the stairway and the minimum clear width of the stairway at and below the handrail height, including treads and landings, shall not be less than 31½ inches (787 mm) where a handrail is installed on one side and 27 inches (698 mm) where handrails are provided on both sides.

Exception: The width of spiral stairways shall be in accordance with Section 311.7.9.1.

311.7.2 Headroom. The minimum headroom in all parts of the stairway shall not be less than 6 feet 8 inches (2032 mm) measured vertically from the sloped line adjoining the tread nosing or from the floor surface of the landing or platform on that portion of the stairway.

Exception: Where the nosings of treads at the side of a flight extend under the edge of a floor opening through which the stair passes, the floor opening shall be allowed to project horizontally into the required headroom a maximum of 4¾ inches (121 mm).

311.7.3 Walkline. The walkline across winder treads shall be concentric to the curved direction of travel through the turn and located 12 inches (305 mm) from the side where the winders are narrower. The 12-inch (305 mm) dimension shall be measured from the widest point of the clear stair width at the walking surface of the winder. If winders are adjacent within the flight, the point of the widest clear stair width of the adjacent winders shall be used.

311.7.4 Stair treads and risers. Stair treads and risers shall meet the requirements of this section. For the purposes of this section all dimensions and dimensioned surfaces shall be exclusive of carpets, rugs or runners.

311.7.4.1 Riser height. The maximum riser height shall be *8 ¼* inches (196 mm). The riser shall be measured vertically between leading edges of the adjacent treads. The greatest riser height within any flight of stairs shall not exceed the smallest by more than $^{3}/_{8}$ inch (9.5 mm).

311.7.4.2 Tread depth. The minimum tread depth shall be *9* inches (254 mm). The tread depth shall be measured horizontally between the vertical planes of the foremost projection of adjacent treads and at a right angle to the tread's leading edge. The greatest tread depth within any flight of stairs shall not exceed the smallest by more than $^{3}/_{8}$ inch (9.5 mm). Consistently shaped winders at the walkline shall be allowed within the same flight of stairs as rectangular treads and do not have to be within $^{3}/_{8}$ inch (9.5 mm) of the rectangular tread depth.

Winder treads shall have a minimum tread depth of *9* ~~10~~ inches (254 mm) measured between the vertical planes of the foremost projection of adjacent treads at the intersections with the walkline. Winder treads shall have a minimum tread depth of 6 inches (152 mm) at any point within the clear width of the stair. Within any flight of stairs, the largest winder tread depth at the walkline shall not exceed the smallest winder tread by more than $^{3}/_{8}$ inch (9.5 mm).

311.7.4.3 Profile. The radius of curvature at the nosing shall be no greater than $^{9}/_{16}$ inch (14 mm). A nosing not less than ¾ inch (19 mm) but not more than 1¼ inches (32 mm) shall be provided on stairways with solid risers. The greatest nosing projection shall not exceed the smallest nosing projection by more than $^{3}/_{8}$ inch (9.5 mm) between two stories, including the nosing at the level of floors and landings. Beveling of nosings shall not exceed ½ inch (12.7 mm). Risers shall be vertical or sloped under the tread above from the underside of the nosing above at an angle not more than 30 degrees (0.51 rad) from the vertical. Open risers are permitted, provided that the opening between treads does not permit the passage of a 4-inch diameter (102 mm) sphere.

Exceptions:

1. A nosing is not required where the tread depth is a minimum of 11 inches (279 mm).

2. The opening between adjacent treads is not limited on stairs with a total rise of 30 inches (762 mm) or less.

311.7.4.4 Exterior wood/plastic composite stair treads. Wood/plastic composite stair treads shall comply with the provisions of Section 317.4.

311.7.5 Landings for stairways. There shall be a floor or landing at the top and bottom of each stairway. A flight of stairs shall not have a vertical rise larger than 12 feet (3658 mm) between floor levels or landings. The width of each landing shall not be less than the width of the stairway served. Every landing shall have a minimum dimension of 36 inches (914 mm) measured in the direction of travel.

Exception: A floor or landing is not required at the top of an interior flight of stairs, including stairs in an enclosed garage, provided a door does not swing over the stairs.

311.7.6 Stairway walking surface. The walking surface of treads and landings of stairways shall be sloped no steeper than one unit vertical in 48 inches horizontal (2-percent slope).

311.7.7 Handrails. Handrails shall be provided on at least one side of each continuous run of treads or flight with four or more risers.

311.7.7.1 Height. Handrail height, measured vertically from the sloped plane adjoining the tread nosing, or finish surface of ramp slope, shall be not less than 34 inches (864 mm) and not more than 38 inches (965 mm).

Exceptions:

1. The use of a volute, turnout or starting easing shall be allowed over the lowest tread.

2. When handrail fittings or bendings are used to provide continuous transition between flights, the transition from handrail to guardrail, or used at the start of a flight, the handrail height at the fittings or bendings shall be permitted to exceed the maximum height.

311.7.7.2 Continuity. Handrails for stairways shall be continuous for the full length of the flight, from a point directly above the top riser of the flight to a point directly above the lowest riser of the flight. Handrail ends shall be returned or shall terminate in newel posts or safety terminals. Handrails adjacent to a wall shall have a space of not less than 1½ inch (38 mm) between the wall and the handrails.

Exceptions:

1. Handrails shall be permitted to be interrupted by a newel post at the turn.

2. The use of a volute, turnout, starting easing or starting newel shall be allowed over the lowest tread.

3. *Two or more separate rails shall be considered continuous if the termination of the rails occurs over a single tread and positioned within 4 inches of each other. If the transition occurs between a wall mounted handrail and handrail/guardrail combination, the wall mounted handrail shall return into the wall.*

311.7.7.3 Grip-size. All required handrails shall be of one of the following types or provide equivalent graspability.

1. Type I. Handrails with a circular cross section shall have an outside diameter of at least 1¼ inches (32 mm) and not greater than 2 inches (51 mm). If the handrail is not circular, it shall have a perimeter dimension of at least 4 inches (102 mm) and not greater than 6¼ inches (160 mm) with a maximum cross section of dimension of 2¼ inches (57 mm). Edges shall have a minimum radius of 0.01 inch (0.25 mm).

2. Type II. Handrails with a perimeter greater than 6¼ inches (160 mm) shall have a graspable finger recess area on both sides of the profile. The finger recess shall begin within a distance of ¾ inch (19 mm) measured vertically from the tallest portion of the profile and achieve a depth of at least $^{5}/_{16}$ inch (8 mm) within $^{7}/_{8}$ inch (22 mm) below the widest portion of the profile. This required depth shall continue for at least $^{3}/_{8}$ inch (10 mm) to a level that is not less

than 1¾ inches (45 mm) below the tallest portion of the profile. The minimum width of the handrail above the recess shall be 1¼ inches (32 mm) to a maximum of 2¾ inches (70 mm). Edges shall have a minimum radius of 0.01 inch (0.25 mm).

311.7.7.4 Exterior wood/plastic composite handrails. Wood/plastic composite handrails shall comply with the provisions of Section 317.4.

311.7.8 Illumination. All stairs shall be provided with illumination in accordance with Section 303.6.

311.7.9 Special stairways. Spiral stairways and bulkhead enclosure stairways shall comply with all requirements of Section 311.7 except as specified below.

311.7.9.1 Spiral stairways. Spiral stairways are permitted, provided the minimum clear width at and below the handrail shall be 26 inches (660 mm) with each tread having a 7½-inch (190 mm) minimum tread depth at 12 inches (914 mm) from the narrower edge. All treads shall be identical, and the rise shall be no more than 9½ inches (241 mm). A minimum headroom of 6 feet 6 inches (1982 mm) shall be provided.

311.7.9.2 Bulkhead enclosure stairways. Stairways serving bulkhead enclosures, not part of the required building egress, providing access from the outside grade level to the basement shall be exempt from the requirements of Sections 311.3 and 311.7 where the maximum height from the basement finished floor level to grade adjacent to the stairway does not exceed 8 feet (2438 mm) and the grade level opening to the stairway is covered by a bulkhead enclosure with hinged doors or other approved means.

311.8 Ramps.

311.8.1 Maximum slope. Ramps shall have a maximum slope of 1 unit vertical in *8* units horizontal (*12.5* percent slope).

311.8.2 Landings required. A minimum 3-foot-by-3-foot (914 mm by 914 mm) landing shall be provided:

1. At the top and bottom of ramps.

2. Where doors open onto ramps.

3. Where ramps change direction.

311.8.3 Handrails required. Handrails shall be provided on at least one side of all ramps exceeding a slope of one unit vertical in 12 units horizontal (8.33-percent slope).

311.8.3.1 Height. Handrail height, measured above the finished surface of the ramp slope, shall be not less than 34 inches (864 mm) and not more than 38 inches (965 mm).

311.8.3.2 Grip size. Handrails on ramps shall comply with Section 311.7.7.3.

311.8.3.3 Continuity. Handrails where required on ramps shall be continuous for the full length of the ramp. Handrail ends shall be returned or shall terminate in newel posts or safety terminals. Handrails adjacent to a wall shall have a space of not less than 1½ inches (38 mm) between the wall and the handrails.

SECTION 312
GUARDS

312.1 Where required. Guards shall be located along open-sided walking surfaces, including stairs, ramps and landings, that are located more than 30 inches (762 mm) measured vertically to the floor or grade below at any point within 36 inches (914 mm) horizontally to the edge of the open side. Insect screening shall not be considered as a guard.

Exception: *Guards are not required where a protective bar is installed 34 inches to 38 inches (864 mm to 965 mm) above the porch or deck on the interior side of the screening. The protective bar shall be capable of resisting a horizontal load of 50 pounds per lineal foot (730 N/m) without contacting the screen and be a minimum of 1½ inches (38 mm) in height.*

312.2 Height. Required guards at open-sided walking surfaces, including stairs, porches, balconies or landings, shall be not less than 36 inches (914 mm) high measured vertically above the adjacent walking surface, adjacent fixed seating or the line connecting the leading edges of the treads.

Exceptions:

1. Guards on the open sides of stairs shall have a height not less than 34 inches (864 mm) measured vertically from a line connecting the leading edges of the treads.

2. Where the top of the guard also serves as a handrail on the open sides of stairs, the top of the guard shall not be not less than 34 inches (864 mm) and not more than 38 inches (965 mm) measured vertically from a line connecting the leading edges of the treads.

312.3 Opening limitations. Required guards shall not have openings from the walking surface to the required guard height which allow passage of a sphere 4 inches (102 mm) in diameter.

Exceptions:

1. The triangular openings at the open side of a stair, formed by the riser, tread and bottom rail of a guard, shall not allow passage of a sphere 6 inches (153 mm) in diameter.

2. Guards on the open sides of stairs shall not have openings which allow passage of a sphere $4^3/_8$ inches (111 mm) in diameter.

312.4 Exterior woodplastic composite guards. Woodplastic composite guards shall comply with the provisions of Section 317.4.

SECTION 313
AUTOMATIC FIRE SPRINKLER SYSTEMS

313.1 Townhouse automatic fire sprinkler systems. An automatic residential fire sprinkler system *is not required to* be installed in townhouses *or other R-3 occupancy designs using this code.*

313.1.1 Design and installation *for non-required systems*. *When a non-required automatic* residential fire sprinkler *system is intended to be installed within a townhouse or a dwelling in another R-3 occupancy using this code, the system* shall be designed and installed in accordance with Section 2904, *NFPA 13, NFPA 13R* or NFPA 13D *as referenced in Chapter 44 of this code.*

313.2 One-, two- *and three*-family dwellings automatic fire systems. *An* automatic residential fire sprinkler system *is not required to* be installed in one-, two-, *or three*-family dwellings.

313.2.1 Design and installation *for non-required systems*. When an automatic residential fire sprinkler systems *is intended to be installed, it* shall be designed and installed in accordance with Section 2904, *NFPA 13, NFPA 13R* or NFPA 13D *as referenced in Chapter 44 of this code*.

313.3 Design and installation of non-required fire sprinkler systems. *Any full or partial fire sprinkler system not required by this code shall be permitted to be installed for partial or complete protection provided that such system meets the requirements of this code to the extent of the intended installation.*

SECTION 314
SMOKE ALARMS

314.1 ~~Smoke detection and notification~~ <u>Listing, Installation, and Technology</u>~~.~~ All smoke alarms shall be listed in accordance with UL 217 and installed in accordance with the provisions of this code and the household fire warning equipment provisions of NFPA 72. <u>On each level within each dwelling unit smoke alarms utilizing photoelectric and ionization technologies shall be installed. Separate or dual-sensing smoke alarms may be used. A smoke alarm located in accordance with section 314.3(2) shall include photoelectric technology.</u>

<u>**Exception:** A system meeting the requirements of Section 314.2 is not required to include both technologies.</u>

314.2 Smoke detection systems. Household fire alarm systems installed in accordance with NFPA 72 that include smoke alarms, or a combination of smoke detector and audible notification device installed as required by this section for smoke alarms, shall be permitted. The household fire alarm system shall provide the same level of smoke detection and alarm as required by this section for smoke alarms. Where a household fire warning system is installed using a combination of smoke detector and audible notification device(s), it shall become a permanent fixture of the occupancy and owned by the homeowner. The system shall be maintained in accordance with NFPA 72.

Exception: Where separate smoke alarms are provided meeting all other ~~the~~ requirements of ~~Section 314.4~~ this section, the smoke detection system is not required to be a permanent fixture of the occupancy or owned by the homeowner .

314.3 Location. Smoke alarms shall be installed in the following locations:

1. In each sleeping room.

2. Outside each separate sleeping area in the immediate vicinity of the *sleeping rooms*.

3. On each additional story of the dwelling, including basements and habitable attics but not including crawl spaces and uninhabitable attics. In dwellings or dwelling units with split levels and without an intervening door between the adjacent levels, a smoke alarm installed on the upper level shall suffice for the adjacent lower level provided that the lower level is less than one full story below the upper level.

When more than one smoke alarm is required to be installed within an individual dwelling unit the alarm devices shall be interconnected in such a manner that the actuation of one alarm will activate all of the alarms in the individual unit.

314.3.1 Alterations, repairs and additions. When alterations, repairs or additions requiring *an approval are made to the spaces described in items 1 and 2 of Section 314.3, smoke alarms shall be provided in those spaces as required for a new dwelling. When* one or more sleeping rooms are added or created in existing dwellings, the *new sleeping rooms and the immediate vicinity outside each sleeping room* shall be equipped with smoke alarms as required for new dwellings.

Exceptions:

1. Work involving the exterior surfaces of dwellings, such as the replacement of roofing or siding, or the addition or replacement of windows or doors, or the addition of a porch or deck are exempt from the requirements of this section.

2. Installation *or* alteration of plumbing or mechanical systems are exempt from the requirements of this section.

314.4 Power source. Smoke alarms shall receive their primary power from the building wiring when such wiring is served from a commercial source, and when primary power is interrupted, shall receive power from a battery. Wiring shall be permanent and without a disconnecting switch other than those required for overcurrent protection. Smoke alarms shall be interconnected.

Exceptions:

1. Smoke alarms shall be permitted to be battery operated when installed in buildings without commercial power.

2. Interconnection and hard-wiring of smoke alarms in existing areas shall not be required where the alterations or repairs do not result in the removal of interior wall or ceiling finishes exposing the structure, unless there is an attic, crawl space or basement available which could provide access for hard wiring and interconnection without the removal of interior finishes.

SECTION 315
CARBON MONOXIDE ALARMS

315.1 When required. *Carbon monoxide alarms are required to be installed only in new and existing dwelling units having fuel-fired appliances or having attached garages and only when any of the conditions described in this section apply.*

315.1.1 New dwelling units. *In new dwelling units, carbon monoxide alarms are required to be installed in the locations described in Section 315.2.*

315.1.2 Existing dwelling units. *In existing dwelling units, where an application for approval is required for work involving any of the following areas or systems within that dwelling unit, carbon monoxide alarms are required to be installed in the locations described in Section 315.2.*

1. *The addition or creation of a new sleeping room;*
2. *An alteration of a sleeping room;*
3. *An alteration in the immediate vicinity outside of a sleeping room;*
4. *An addition of, or an alteration to, an attached garage;*
5. *An addition, alteration, repair or replacement of a fuel-fired appliance.*

315.2 Where required. *In new dwelling units and in existing dwelling units meeting any of the conditions described in Section 315.1.2, an approved carbon monoxide alarm shall be installed outside of each separate sleeping area in the immediate vicinity of the sleeping rooms in those dwelling units.*

315.3 Alarm requirements. Single station carbon monoxide alarms shall be listed as complying with UL 2034 and shall be installed in accordance with this code and the manufacturer's installation instructions.

SECTION 316
FOAM PLASTIC

316.1 General. The provisions of this section shall govern the materials, design, application, construction and installation of foam plastic materials.

316.2 Labeling and identification. Packages and containers of foam plastic insulation and foam plastic insulation components delivered to the job site shall bear the label of an approved agency showing the manufacturer's name, the product listing, product identification and information sufficient to determine that the end use will comply with the requirements.

316.3 Surface burning characteristics. Unless otherwise allowed in Section 316.5 or 316.6, all foam plastic or foam plastic cores used as a component in manufactured assemblies used in building construction shall have a flame spread index of not more than 75 and shall have a smoke-developed index of not more than 450 when tested in the maximum thickness intended for use in accordance with ASTM E 84 or UL 723. Loose-fill type foam plastic insulation shall be tested as board stock for the flame spread index and smoke-developed index.

> **Exception:** Foam plastic insulation more than 4 inches (102 mm) thick shall have a maximum flame spread index of 75 and a smoke-developed index of 450 where tested at a minimum thickness of 4 inches (102 mm), provided the end use is approved in accordance with Section 316.6 using the thickness and density intended for use.

316.4 Thermal barrier. Unless otherwise allowed in Section 316.5 or Section 316.6, foam plastic shall be separated from the interior of a building by an approved thermal barrier of minimum ½ inch (12.7 mm) gypsum wallboard or an approved finish material equivalent to a thermal barrier material that will limit the average temperature rise of the unexposed surface to no more than 250°F (139°C) after 15 minutes of fire exposure complying with the ASTM E 119 or UL 263

standard time temperature curve. The thermal barrier shall be installed in such a manner that it will remain in place for 15 minutes based on NFPA 286 with the acceptance criteria of Section 302.9.4, FM 4880, UL 1040 or UL 1715.

316.5 Specific requirements. The following requirements shall apply to these uses of foam plastic unless specifically approved in accordance with Section 316.6 or by other sections of the code or the requirements of Sections 316.2 through 316.4 have been met.

316.5.1 Masonry or concrete construction. The thermal barrier specified in Section 316.4 is not required in a masonry or concrete wall, floor or roof when the foam plastic insulation is separated from the interior of the building by a minimum 1-inch (25 mm) thickness of masonry or concrete.

316.5.2 Roofing. The thermal barrier specified in Section 316.4 is not required when the foam plastic in a roof assembly or under a roof covering is installed in accordance with the code and the manufacturer's installation instructions and is separated from the interior of the building by tongue-and-groove wood planks or wood structural panel sheathing in accordance with Section 803, not less than $^{15}/_{32}$ inch (11.9 mm) thick bonded with exterior glue and identified as Exposure 1, with edges supported by blocking or tongue-and-groove joints or an equivalent material. The smoke-developed index for roof applications shall not be limited.

316.5.3 Attics. The thermal barrier specified in Section 316.4 is not required where all of the following apply:

1. Attic access is required by Section 807.1.

2. The space is entered only for purposes of maintenance.

3. The foam plastic insulation is protected against ignition using one of the following ignition barrier materials:

   3.1. 1½-inch-thick (38 mm) mineral fiber insulation;

   3.2. ¼-inch-thick (6.4 mm) wood structural panels;

   3.3. $^{3}/_{8}$-inch (9.5 mm) particleboard;

   3.4. ¼-inch (6.4 mm) hardboard;

3.5. $^{3}/_{8}$-inch (9.5 mm) gypsum board; or

3.6. Corrosion-resistant steel having a base metal thickness of 0.016 inch (0.406 mm).

The above ignition barrier is not required where the foam plastic insulation has been tested in accordance with Section 316.6.

316.5.4 Crawl spaces. The thermal barrier specified in Section 316.4 is not required where all of the following apply:

1. Crawlspace access is required by Section 408.4

2. Entry is made only for purposes of repairs or maintenance.

3. The foam plastic insulation is protected against ignition using one of the following ignition barrier materials:

   3.1. 1½-inch-thick (38 mm) mineral fiber insulation;

   3.2. ¼-inch-thick (6.4 mm) wood structural panels;

   3.3. $^{3}/_{8}$-inch (9.5 mm) particleboard;

   3.4. ¼-inch (6.4 mm) hardboard;

   3.5. $^{3}/_{8}$-inch (9.5 mm) gypsum board; or

   3.6. Corrosion-resistant steel having a base metal thickness of 0.016 inch (0.406 mm).

The above ignition barrier is not required where the foam plastic insulation has been tested in accordance with Section 316.6.

316.5.5 Foam-filled exterior doors. Foam-filled exterior doors are exempt from the requirements of Sections 316.3 and 316.4.

316.5.6 Foam-filled garage doors. Foam-filled garage doors in attached or detached garages are exempt from the requirements of Sections 316.3 and 316.4.

316.5.7 Foam backer board. The thermal barrier specified in Section 316.4 is not required where siding backer board foam plastic insulation has a maximum thickness of inch (12.7 mm) and a potential heat of not more than 2000 Btu per square foot (22 720 kJ/m^2) when tested in accordance with NFPA 259 provided that:

1. The foam plastic insulation is separated from the interior of the building by not less than 2 inches (51 mm) of mineral fiber insulation or

2. The foam plastic insulation is installed over existing exterior wall finish in conjunction with re-siding or

3. The foam plastic insulation has been tested in accordance with Section 316.6.

316.5.8 Re-siding. The thermal barrier specified in Section 316.4 is not required where the foam plastic insulation is installed over existing exterior wall finish in conjunction with re-siding provided the foam plastic has a maximum thickness of 0.5 inch (12.7 mm) and a potential heat of not more than 2000 Btu per square foot (22 720 kJ/m^2) when tested in accordance with NFPA 259.

316.5.9 Interior trim. The thermal barrier specified in Section 316.4 is not required for exposed foam plastic interior trim, provided all of the following are met:

1. The minimum density is 20 pounds per cubic foot (320 kg/m^3).

2. The maximum thickness of the trim is 0.5 inch (12.7 mm) and the maximum width is 8 inches (204 mm).

3. The interior trim shall not constitute more than 10 percent of the aggregate wall and ceiling area of any room or space.

4. The flame spread index does not exceed 75 when tested per ASTM E 84. The smoke-developed index is not limited.

316.5.10 Interior finish. Foam plastics shall be permitted as interior finish where approved in accordance with Section 316.6. Foam plastics that are used

as interior finish shall also meet the flame spread index and smoke-developed index requirements of Sections 302.9.1 and 302.9.2.

316.5.11 Sill plates and headers. Foam plastic shall be permitted to be spray applied to a sill plate and header without the thermal barrier specified in Section 316.4 subject to all of the following:

1. The maximum thickness of the foam plastic shall be 3¼ inches (83 mm).

2. The density of the foam plastic shall be in the range of 0.5 to 2.0 pounds per cubic foot (8 to 32 kg/m^3).

3. The foam plastic shall have a flame spread index of 25 or less and an accompanying smoke developed index of 450 or less when tested in accordance with ASTM E 84.

316.5.12 Sheathing. Foam plastic insulation used as sheathing shall comply with Section 316.3 and Section 316.4. Where the foam plastic sheathing is exposed to the attic space at a gable or kneewall, the provisions of Section 316.5.3 shall apply.

316.6 Specific approval. Foam plastic not meeting the requirements of Sections 316.3 through 316.5 shall be specifically approved on the basis of one of the following approved tests: NFPA 286 with the acceptance criteria of Section 302.9.4, FM4880, UL 1040 or UL 1715, or fire tests related to actual end-use configurations. The specific approval shall be based on the actual end use configuration and shall be performed on the finished foam plastic assembly in the maximum thickness intended for use. Assemblies tested shall include seams, joints and other typical details used in the installation of the assembly and shall be tested in the manner intended for use.

316.7 Termite damage. The use of foam plastics in areas of “very heavy” termite infestation probability shall be in accordance with Section 318.4.

SECTION 317
PROTECTION OF WOOD AND WOOD BASED PRODUCTS AGAINST DECAY

317.1 Location required. Protection of wood and wood based products from decay shall be provided in the following locations by the use of naturally durable wood or wood that is preservative-treated in accordance with AWPA U1 for the

species, product, preservative and end use. Preservatives shall be listed in Section 4 of AWPA U1.

1. Wood joists or the bottom of a wood structural floor when closer than 18 inches (457 mm) or wood girders when closer than 12 inches (305 mm) to the exposed ground in crawl spaces or unexcavated area located within the periphery of the building foundation.

2. All wood framing members that rest on concrete or masonry exterior foundation walls and are less than 8 inches (203 mm) from the exposed ground.

3. Sills and sleepers on a concrete or masonry slab that is in direct contact with the ground unless separated from such slab by an impervious moisture barrier.

4. The ends of wood girders entering exterior masonry or concrete walls having clearances of less than ½ inch (12.7 mm) on tops, sides and ends.

5. Wood siding, sheathing and wall framing on the exterior of a building having a clearance of less than 6 inches (152 mm) from the ground or less than 2 inches (51 mm) measured vertically from concrete steps, porch slabs, patio slabs, and similar horizontal surfaces exposed to the weather.

6. Wood structural members supporting moisture-permeable floors or roofs that are exposed to the weather, such as concrete or masonry slabs, unless separated from such floors or roofs by an impervious moisture barrier.

7. Wood furring strips or other wood framing members attached directly to the interior of exterior masonry walls or concrete walls below grade except where an approved vapor retarder is applied between the wall and the furring strips or framing members.

317.1.1 Field treatment. *Deleted***.**

317.1.2 Ground contact. All wood in contact with the ground, embedded in concrete in direct contact with the ground or embedded in concrete exposed to the weather that supports permanent structures intended for human occupancy shall be approved pressure-preservative-treated wood suitable for ground contact use, except untreated wood may be used where entirely below groundwater level or continuously submerged in fresh water.

317.1.3 Geographical areas. In geographical areas where experience has demonstrated a specific need, approved naturally durable or pressure-preservative-treated wood shall be used for those portions of wood members that form the structural supports of buildings, balconies, porches or similar permanent building appurtenances when those members are exposed to the weather without adequate protection from a roof, eave, overhang or other covering that would prevent moisture or water accumulation on the surface or at joints between members. Depending on local experience, such members may include:

1. Horizontal members such as girders, joists and decking.

2. Vertical members such as posts, poles and columns.

3. Both horizontal and vertical members.

317.1.4 Wood columns. Wood columns shall be approved wood of natural decay resistance or approved pressure-preservative-treated wood.

Exceptions:

1. Columns exposed to the weather or in basements when supported by concrete piers or metal pedestals projecting 1 inch (25.4 mm) above a concrete floor or 6 inches (152 mm) above exposed earth and the earth is covered by an approved impervious moisture barrier.

2. Columns in enclosed crawl spaces or unexcavated areas located within the periphery of the building when supported by a concrete pier or metal pedestal at a height more than 8 inches (203mm) from exposed earth and the earth is covered by an impervious moisture barrier.

317.1.5 Exposed glued-laminated timbers. The portions of glued-laminated timbers that form the structural supports of a building or other structure and are exposed to weather and not properly protected by a roof, eave or similar covering shall be pressure treated with preservative, or be manufactured from naturally durable or preservative-treated wood.

317.2 Quality mark. Lumber and plywood required to be pressure-preservative-treated in accordance with Section 318.1 shall bear the quality mark of an approved inspection agency that maintains continuing supervision, testing and inspection over the quality of the product and that has been approved by an accreditation body that complies with the requirements of the American Lumber Standard Committee treated wood program.

317.2.1 Required information. The required quality mark on each piece of pressure-preservative-treated lumber or plywood shall contain the following information:

1. Identification of the treating plant.
2. Type of preservative.
3. The minimum preservative retention.
4. End use for which the product was treated.
5. Standard to which the product was treated.
6. Identity of the approved inspection agency.
7. The designation "Dry," if applicable.

Exception: Quality marks on lumber less than 1 inch (25.4 mm) nominal thickness, or lumber less than nominal 1 inch by 5 inches (25.4 mm by 127 mm) or 2 inches by 4 inches (51 mm by 102 mm) or lumber 36 inches (914 mm) or less in length shall be applied by stamping the faces of exterior pieces or by end labeling not less than 25 percent of the pieces of a bundled unit.

317.3 Fasteners and connectors in contact with preservative-treated and fire-retardant-treated wood. Fasteners and connectors in contact with preservative-treated wood and fire-retardant-treated wood shall be in accordance with this section. The coating weights for zinc-coated fasteners shall be in accordance with ASTM A 153.

317.3.1 Fasteners for preservative-treated wood. Fasteners for preservative-treated wood shall be of hot dipped zinc-coated galvanized steel, stainless steel, silicon bronze or copper. Coating types and weights for connectors in

contact with preservative-treated wood shall be in accordance with the connector manufacturer's recommendations. In the absence of manufacturer's recommendations, a minimum of ASTM A 653 type G185 zinc-coated galvanized steel, or equivalent, shall be used.

Exceptions:

1. One-half-inch (12.7 mm) diameter or greater steel bolts.

2. Fasteners other than nails and timber rivets shall be permitted to be of mechanically deposited zinc coated steel with coating weights in accordance with ASTM B 695, Class 55 minimum.

317.3.2 Fastenings for wood foundations. Fastenings for wood foundations shall be as required in AF&PA PWF.

317.3.3 Fasteners for fire-retardant-treated wood used in exterior applications or wet or damp locations. Fasteners for fire-retardant-treated wood used in exterior applications or wet or damp locations shall be of hot-dipped zinc-coated galvanized steel, stainless steel, silicon bronze or copper. Fasteners other than nails and timber rivets shall be permitted to be of mechanically deposited zinc-coated steel with coating weights in accordance with ASTM B 695, Class 55 minimum.

317.3.4 Fasteners for fire-retardant-treated wood used in interior applications. Fasteners for fire-retardant-treated wood used in interior locations shall be in accordance with the manufacturer's recommendations. In the absence of the manufacturer's recommendations, Section 317.3.3 shall apply.

317.4 Wood/plastic composites. Wood/plastic composites used in exterior deck boards, stair treads, handrails and guardrail systems shall bear a label indicating the required performance levels and demonstrating compliance with the provisions of ASTM D 7032.

317.4.1 Wood/plastic composites shall be installed in accordance with the manufacturer's instructions.

SECTION 318
PROTECTION AGAINST SUBTERRANEAN TERMITES

318.1 Subterranean termite control methods. In areas subject to damage from termites as indicated by Table 301.2(1), methods of protection shall be one of the following methods or a combination of these methods:

1. Chemical termiticide treatment, as provided in Section 318.2.

2. Termite baiting system installed and maintained according to the label.

3. Pressure-preservative-treated wood in accordance with the provisions of Section 317.1.

4. Naturally durable termite-resistant wood and used in locations as specified in Section 318.1.

5. Physical barriers as provided in Section 318.3.

6. Cold-formed steel framing in accordance with Sections 505.2.1 and 603.2.1.

318.1.1 Quality mark. Lumber and plywood required to be pressure-preservative-treated in accordance with Section 318.1 shall bear the quality mark of an approved inspection agency which maintains continuing supervision, testing and inspection over the quality of the product and which has been approved by an accreditation body which complies with the requirements of the American Lumber Standard Committee treated wood program.

318.1.2 Field treatment. *Deleted.*

318.2 Chemical termiticide treatment. Chemical termiticide treatment shall include soil treatment and/or field applied wood treatment. The concentration, rate of application and method of treatment of the chemical termiticide shall be in strict accordance with the termiticide label.

318.3 Barriers. Approved physical barriers, such as metal or plastic sheeting or collars specifically designed for termite prevention, shall be installed in a manner to prevent termites from entering the structure. Shields placed on top of an exterior foundation wall are permitted to be used only if in combination with another method of protection.

318.4 Foam plastic protection. In areas where the probability of termite infestation is "very heavy" as indicated in Figure 301.2(6), extruded and expanded polystyrene, polyisocyanurate and other foam plastics shall not be installed on the exterior face or under interior or exterior foundation walls or slab foundations located below grade. The clearance between foam plastics installed above grade and exposed earth shall be at least 6 inches (152 mm).

Exceptions:

1. Buildings where the structural members of walls, floors, ceilings and roofs are entirely of noncombustible materials or pressure-preservative-treated wood.

2. When in addition to the requirements of Section 318.1, an approved method of protecting the foam plastic and structure from subterranean termite damage is used.

3. On the interior side of basement walls.

SECTION 319
SITE ADDRESS

319.1 Address numbers. Buildings shall have approved address numbers, building numbers or approved building identification placed in a position that is plainly legible and visible from the street or road fronting the property.

SECTION 320
ACCESSIBILITY

320.1 Scope. *Where there are four or more dwelling units or sleeping units in a single structure, and the design qualifies for this code to apply, the provisions of section 320 shall apply.*

In structures with 1, 2 or 3 dwelling units, the accessibility provisions of this code are not required but when non-required accessibility components are intended to be installed inside the dwellings, they shall comply with the provisions for Type A, Type B, Type C (Visitable), or Accessible units in ICC/ANSI A117.1 listed in Chapter 44 to the extent of the installation.

320.2 Applicability. *Where there are four or more dwelling units or sleeping units intended to be occupied as residences in a single structure, every dwelling*

unit shall be a Type B unit designed and constructed for accessibility in accordance with section 320 and the provisions for Type B units in Chapter 10 of the ICC/ANSI A117.1 listed in Chapter 44.

> ***Exception**: The number of Type B units is permitted to be reduced in accordance with Section 320.4.*

When this code applies to structures of four or more dwellings and Type B units are required, the common and public use areas serving the Type B dwellings and the accessible route connecting the common and public use areas to the Type B units shall comply with ICC/ANSI A117.1 listed in Chapter 44.

***320.3 Accessible route**. At least one accessible route shall connect accessible building or facility entrances with the primary entrance of each Type B unit within the building or facility and with those exterior and interior spaces and facilities that serve the Type B units.*

Exception:

1. *If due to circumstances outside the control of the owner, either the slope of the finished ground level between accessible facilities and buildings exceeds one unit vertical in 12 units horizontal (1:12), or where physical barriers or legal restrictions prevent the installation of an accessible route, a vehicular route with parking that complies with ICC/ANSI A117.1 listed in Chapter 44 at each public or common use facility or building is permitted in place of the accessible route.*

***320.4 General exceptions.** The required number of Type B units is permitted to be reduced in accordance with Sections 320.4.1 through 320.4.5.*

> ***320.4.1 Structures without elevator service.** Where no elevator service is provided in a structure, only the dwelling units that are located on stories indicated in Sections 320.4.1.1 and 320.4.1.2 are required to be Type B units, respectively.*
>
> > ***320.4.1.1 One story with Type B units required**. At least one story containing dwelling units or sleeping units intended to be occupied as a residence shall be provided with an accessible entrance from the exterior of the structure and all units intended to be occupied as a residence on that story shall be Type B units.*

320.4.1.2 Additional stories with Type B units. *On all other stories that have a building entrance in proximity to arrival points intended to serve units on that story, as indicated in Items 1 and 2, all dwelling units intended to be occupied as a residence served by that entrance on that story shall be Type B units.*

1. *Where the slopes of the undisturbed site measured between the planned entrance and all vehicular or pedestrian arrival points within 50 feet (15 240 mm) of the planned entrance are 10 percent or less, and*

2. *Where the slopes of the planned finished grade measured between the entrance and all vehicular or pedestrian arrival points within 50 feet (15 240 mm) of the planned entrance are 10 percent or less.*

Where no such arrival points are within 50 feet (15 240 mm) of the entrance, the closest arrival point shall be used unless that arrival point serves the story required by Section 320.4.1.1.

320.4.2 Multistory units. *A multistory dwelling which is not provided with elevator service is not required to be a Type B unit. Where a multistory unit is provided with external elevator service to only one floor, the floor provided with elevator service shall be the primary entry to the unit, shall comply with the requirements for a Type B unit and a toilet facility shall be provided on that floor.*

For purposes of applying section 320, multistory units are dwellings with finished, habitable space on more than one level of the unit.

320.4.3 Elevator service to the lowest story with units. *Where elevator service in the building provides an accessible route only to the lowest story containing dwelling or sleeping units intended to be occupied as a residence, only the units on that story which are intended to be occupied as a residence are required to be Type B units.*

320.4.4 Site impracticality. *On a site with multiple non-elevator buildings, the number of units required by Section 320.4.1 to be Type B units is permitted to be reduced to a percentage which is equal to the percentage of the entire site having grades, prior to development, which are less than 10 percent, provided that all of the following conditions are met:*

1. *Not less than 20 percent of the units required by Section 320.4.1 on the site are Type B units;*

2. *Units required by Section 320.4.1, where the slope between the building entrance serving the units on that story and a pedestrian or vehicular arrival point is no greater than 8.33 percent, are Type B units;*

3. *Units required by Section 320.4.1, where an elevated walkway is planned between a building entrance serving the units on that story and a pedestrian or vehicular arrival point and the slope between them is 10 percent or less are Type B units; and*

4. *Units served by an elevator in accordance with Section 320.4.3 are Type B units.*

320.4.5 Design flood elevation. *The required number of Type B units shall not apply to a site where the required elevation of the lowest floor or the lowest horizontal structural building members of non-elevator buildings are at or above the design flood elevation resulting in:*

1. *A difference in elevation between the minimum required floor elevation at the primary entrances and vehicular and pedestrian arrival points within 50 feet (15 240 mm) exceeding 30 inches (762 mm), and*

2. *A slope exceeding 10 percent between the minimum required floor elevation at the primary entrances and vehicular and pedestrian arrival points within 50 feet (15.24 m).*

Where no such arrival points are within 50 feet (15.24 m) of the primary entrances, the closest arrival points shall be used.

SECTION 321
ELEVATORS AND PLATFORM LIFTS

321.1 Elevators. Where provided, passenger elevators, limited-use/limited-application elevators or private residence elevators shall comply with ASME A17.1.

321.2 Platform lifts. Where provided, platform lifts shall comply with ASME A18.1.

321.3 Accessibility. Elevators or platform lifts that are part of an accessible route, shall *also* comply with *ICC/ANSI A117.1*.

SECTION 322
FLOOD-RESISTANT CONSTRUCTION

322.1 General. *Except where approved by the Flood Plain Administrator having jurisdiction or by variance granted, buildings* and structures constructed in whole or in part in flood hazard areas (including A or V Zones) as established in Table 301.2(1) shall be designed and constructed in accordance with the provisions contained in this section.

Exception: Buildings and structures located in whole or in part in identified floodways shall be designed and constructed in accordance with ASCE 24.

322.1.1 Alternative provisions. As an alternative to the requirements in Section 322.3 for buildings and structures located in whole or in part in coastal high-hazard areas (V Zones), ASCE 24 is permitted subject to the limitations of this code and the limitations therein.

322.1.2 Structural systems. All structural systems of all buildings and structures shall be designed, connected and anchored to resist flotation, collapse or permanent lateral movement due to structural loads and stresses from flooding equal to the design flood elevation.

322.1.3 Flood-resistant construction. All buildings and structures erected in areas prone to flooding shall be constructed by methods and practices that minimize flood damage.

322.1.4 Establishing the design flood elevation. The design flood elevation shall be used to define areas prone to flooding. At a minimum, the design flood elevation is the higher of:

1. The base flood elevation at the depth of peak elevation of flooding (including wave height) which has a 1 percent (100-year flood) or greater chance of being equaled or exceeded in any given year, or

2. The elevation of the design flood associated with the area designated on a flood hazard map adopted by the community, or otherwise legally designated.

322.1.4.1 Determination of design flood elevations. If design flood elevations are not specified, the building official is authorized to require the applicant to:

1. Obtain and reasonably use data available from a federal, state or other source; or

2. Determine the design flood elevation in accordance with accepted hydrologic and hydraulic engineering practices used to define special flood hazard areas. Determinations shall be undertaken by a registered design professional who shall document that the technical methods used reflect currently accepted engineering practice. Studies, analyses and computations shall be submitted in sufficient detail to allow thorough review and approval.

322.1.4.2 Determination of impacts. In riverine flood hazard areas where design flood elevations are specified but floodways have not been designated, the applicant shall demonstrate that the effect of the proposed buildings and structures on design flood elevations, including fill, when combined with all other existing and anticipated flood hazard area encroachments, will not increase the design flood elevation more than 1 foot (305 mm) at any point within the jurisdiction.

322.1.5 Lowest floor. The lowest floor shall be the floor of the lowest enclosed area, including basement, but excluding any unfinished flood-resistant enclosure that is useable solely for vehicle parking, building access or limited storage provided that such enclosure is not built so as to render the building or structure in violation of this section.

322.1.6 Protection of mechanical and electrical systems. Electrical systems, equipment and components; heating, ventilating, air conditioning; plumbing appliances and plumbing fixtures; duct systems; and other service equipment shall be located at or above the elevation required in Section 322.2 (flood hazard areas including A Zones) or 322.3 (coastal high-hazard areas including V Zones). If replaced as part of a substantial improvement, electrical systems, equipment and components; heating, ventilating, air conditioning and plumbing appliances and plumbing fixtures; duct systems; and other service

equipment shall meet the requirements of this section. Systems, fixtures, and equipment and components shall not be mounted on or penetrate through walls intended to break away under flood loads.

Exception: Locating electrical systems, equipment and components; heating, ventilating, air conditioning; plumbing appliances and plumbing fixtures; duct systems; and other service equipment is permitted below the elevation required in Section 322.2 (flood hazard areas including A Zones) or 322.3 (coastal high-hazard areas including V Zones) provided that they are designed and installed to prevent water from entering or accumulating within the components and to resist hydrostatic and hydrodynamic loads and stresses, including the effects of buoyancy, during the occurrence of flooding to the design flood elevation in accordance with ASCE 24. Electrical wiring systems are permitted to be located below the required elevation provided they conform to the provisions of the electrical part of this code for wet locations.

322.1.7 Protection of water supply and sanitary sewage systems. New and replacement water supply systems shall be designed to minimize or eliminate infiltration of flood waters into the systems in accordance with the plumbing code. New and replacement sanitary sewage systems shall be designed to minimize or eliminate infiltration of floodwaters into systems and discharges from systems into floodwaters in accordance with the plumbing code.

322.1.8 Flood-resistant materials. Building materials used below the elevation required in Section 322.2 (flood hazard areas including A Zones) or 322.3 (coastal high-hazard areas including V Zones) shall comply with the following:

1. All wood, including floor sheathing, shall be pressure-preservative-treated in accordance with AWPA U1 for the species, product, preservative and end use or be the decay-resistant heartwood of redwood, black locust or cedars. Preservatives shall be listed in Section 4 of AWPA U1.

2. Materials and installation methods used for flooring and interior and exterior walls and wall coverings shall conform to the provisions of FEMA/FIA-TB-2.

322.1.9 Manufactured homes. *Deleted.*

322.1.10 As-built elevation documentation. A registered design professional shall prepare documentation of the elevations specified in Section 322.2 or 322.3.

322.2 Flood hazard areas (including A Zones). All areas that have been determined to be prone to flooding but not subject to high velocity wave action shall be designated as flood hazard areas. Flood hazard areas that have been delineated as subject to wave heights between 1½ feet (457 mm) and 3 feet (914 mm) shall be designated as Coastal A Zones. All building and structures constructed in whole or in part in flood hazard areas shall be designed and constructed in accordance with Sections 322.2.1 through 322.2.3.

322.2.1 Elevation requirements.

1. Buildings and structures in flood hazard areas not designated as Coastal A Zones shall have the lowest floors elevated to or above the design flood elevation.

2. Buildings and structures in flood hazard areas designated as Coastal A Zones shall have the lowest floors elevated to or above the base flood elevation plus 1 foot (305 mm), or to the design flood elevation, whichever is higher.

3. In areas of shallow flooding (AO Zones), buildings and structures shall have the lowest floor (including basement) elevated at least as high above the highest adjacent grade as the depth number specified in feet on the FIRM, or at least 2 feet (610 mm) if a depth number is not specified.

4. Basement floors that are below grade on all sides shall be elevated to or above the design flood elevation.

Exception: Enclosed areas below the design flood elevation, including basements whose floors are not below grade on all sides, shall meet the requirements of Section 322.2.2.

322.2.2 Enclosed area below design flood elevation. Enclosed areas, including crawl spaces, that are below the design flood elevation shall:

1. Be used solely for parking of vehicles, building access or storage.

2. Be provided with flood openings that meet the following criteria:

   There shall be a minimum of two openings on different sides of each enclosed area; if a building has more than one enclosed area below the design flood elevation, each area shall have openings on exterior walls.

   The total net area of all openings shall be at least 1 square inch (645 mm^2) for each square foot (0.093 m^2) of enclosed area, or the openings shall be designed and the construction documents shall include a statement by a registered design professional that the design of the openings will provide for equalization of hydrostatic flood forces on exterior walls by allowing for the automatic entry and exit of floodwaters as specified in Section 2.6.2.2 of ASCE 24.

   The bottom of each opening shall be 1 foot (305 mm) or less above the adjacent ground level.

   Openings shall be not less than 3 inches (76 mm) in any direction in the plane of the wall.

   Any louvers, screens or other opening covers shall allow the automatic flow of floodwaters into and out of the enclosed area.

   Openings installed in doors and windows, that meet requirements 2.1 through 2.5, are acceptable; however, doors and windows without installed openings do not meet the requirements of this section.

322.2.3 Foundation design and construction. Foundation walls for all buildings and structures erected in flood hazard areas shall meet the requirements of Chapter 4.

Exception: Unless designed in accordance with Section 404:

1. The unsupported height of 6-inch (152 mm) plain masonry walls shall be no more than 3 feet (914 mm).

2. The unsupported height of 8-inch (203 mm) plain masonry walls shall be no more than 4 feet (1219 mm).

3. The unsupported height of 8-inch (203 mm) reinforced masonry walls shall be no more than 8 feet (2438 mm).

For the purpose of this exception, unsupported height is the distance from the finished grade of the under-floor space and the top of the wall.

322.3 Coastal high-hazard areas (including V Zones). Areas that have been determined to be subject to wave heights in excess of 3 feet (914 mm) or subject to high-velocity wave action or wave-induced erosion shall be designated as coastal high-hazard areas. Buildings and structures constructed in whole or in part in coastal high-hazard areas shall be designed and constructed in accordance with Sections 322.3.1 through 322.3.6.

322.3.1 Location and site preparation.

1. New buildings and buildings that are determined to be substantially improved pursuant to Section *113.4*, shall be located landward of the reach of mean high tide.

2. For any alteration of sand dunes and *other coastal features* the building official shall require submission of an engineering analysis which demonstrates that the proposed alteration will not increase the potential for flood damage.

322.3.2 Elevation requirements.

1. All buildings and structures erected within coastal high hazard areas shall be elevated so that the lowest portion of all structural members supporting the lowest floor, with the exception of mat or raft foundations, piling, pile caps, columns, grade beams and bracing, is:

   1.1 Located at or above the design flood elevation, if the lowest horizontal structural member is oriented parallel to the direction of wave approach, where parallel shall mean less than or equal to 20 degrees (0.35 rad) from the direction of approach, or

1.2 Located at the base flood elevation plus 1 foot (305 mm), or the design flood elevation, whichever is higher, if the lowest horizontal structural member is oriented perpendicular to the direction of wave approach, where perpendicular shall mean greater than 20 degrees (0.35 rad) from the direction of approach.

2. Basement floors that are below grade on all sides are prohibited.

3. The use of fill for structural support is prohibited.

4. Minor grading, and the placement of minor quantities of fill, shall be permitted for landscaping and for drainage purposes under and around buildings and for support of parking slabs, pool decks, patios and walkways.

   Exception: Walls and partitions enclosing areas below the design flood elevation shall meet the requirements of Sections 322.3.4 and 322.3.5.

322.3.3 Foundations. Buildings and structures erected in coastal high-hazard areas shall be supported on pilings or columns and shall be adequately anchored to those pilings or columns. Pilings shall have adequate soil penetrations to resist the combined wave and wind loads (lateral and uplift). Water loading values used shall be those associated with the design flood. Wind loading values shall be those required by this code. Pile embedment shall include consideration of decreased resistance capacity caused by scour of soil strata surrounding the piling. Pile systems design and installation shall be certified in accordance with Section 322.3.6. Mat, raft or other foundations that support columns shall not be permitted where soil investigations that are required in accordance with Section 401.4 indicate that soil material under the mat, raft or other foundation is subject to scour or erosion from wave-velocity flow conditions. Slabs, pools, pool decks and walkways shall be located and constructed to be structurally independent of buildings and structures and their foundations to prevent transfer of flood loads to the buildings and structures during conditions of flooding, scour or erosion from wave-velocity flow conditions, unless the buildings and structures and their foundation are designed to resist the additional flood load.

322.3.4 Walls below design flood elevation. Walls and partitions are permitted below the elevated floor, provided that such walls and partitions are not part of the structural support of the building or structure and:

1. Electrical, mechanical, and plumbing system components are not to be mounted on or penetrate through walls that are designed to break away under flood loads; and

2. Are constructed with insect screening or open lattice; or

3. Are designed to break away or collapse without causing collapse, displacement or other structural damage to the elevated portion of the building or supporting foundation system. Such walls, framing and connections shall have a design safe loading resistance of not less than 10 (479 Pa) and no more than 20 pounds per square foot (958 Pa); or

4. Where wind loading values of this code exceed 20 pounds per square foot (958 Pa), the construction documents shall include documentation prepared by a registered design professional that:

   4.1. The walls and partitions below the design flood elevation have been designed to collapse from a water load less than that which would occur during the design flood.

   4.2. The elevated portion of the building and supporting foundation system have been designed to withstand the effects of wind and flood loads acting simultaneously on all building components (structural and nonstructural). Water loading values used shall be those associated with the design flood. Wind loading values shall be those required by this code.

322.3.5 Enclosed areas below design flood elevation. Enclosed areas below the design flood elevation shall be used solely for parking of vehicles, building access or storage.

322.3.6 Construction documents. The construction documents shall include documentation that is prepared by a registered design professional that the design and methods of construction to be used meet the applicable criteria of this section.

SECTION 323
STORM SHELTERS

323.1 General. This section applies to the construction of storm shelters when constructed as separate detached buildings or when constructed as safe rooms within buildings for the purpose of providing safe refuge from storms that produce high winds, such as tornados and hurricanes. In addition to other applicable requirements in this code, storm shelters shall be constructed in accordance with ICC/NSSA-500.

SECTION 324
POST FRAME ACCESSORY STRUCTURES

324.1 Post frame accessory structures. *The following requirements serve as minimum standards for post and frame structures within all of the following structural limitations:*

1. *Residential accessory structures,*
2. *Single story,*
3. *Solid exterior structural sheathing or metal roof, and solid wall panels,*
4. *No attic storage,*
5. *Maximum building width of thirty six feet including the overhang,*
6. *Maximum wall height of sixteen feet,*
7. *Maximum mean roof height of twenty feet, and*
8. *Maximum post spacing of eight feet.*

Post and frame structures and portions thereof outside the above structural limitations of this standard shall be accompanied by structural calculations as required by the residential building official or designed under the provisions of section 106.5 of the Residential Code of Ohio (RCO). Post and frame structures shall comply with the structural design requirements of section 301 of the RCO.

324.2 Definition. *Post frame accessory structures consist of primary members (wood posts, beams & single span roof trusses or ceiling joist and rafters) and secondary members (wood roof purlins, wall girts, bracing & sheathing) where all loads are transmitted from the sheathing and the secondary members to the*

primary members which transfer all combined loads to the soil through vertical posts bearing on footings embedded in the ground. See Figure 324.

324.3 Footings and foundations. *Footings and foundations shall comply with applicable provisions of 401. Post frame structures shall have poured in-place concrete footings installed below all posts. The top of the footing shall be a minimum of 48 inches below finished grade and have footing diameters complying with Table 324.3.*

TABLE 324.3
POST FRAME PIER FOOTING DIAMETERS [1,2,3,4]

	Building width (length of truss) including overhang (feet)			
	24	*28*	*32*	*36*
Diameter (inches) 20# roof snow load	*18*	*20*	*22*	*22*
Diameter (inches) 30# roof snow load	*18*	*22*	*24*	*26*

1. *Pier footing thickness shall be a minimum one-half of the diameter of the footing.*
2. *Based upon 2000 PSF soil bearing capacity and truss loads of 20 or 30 PSF live or snow load top chord, 10 PSF dead load top chord, 5 PSF dead load on the bottom chord and no live load on the bottom chord*
3. *Fractional widths shall be rounded to the next higher pier footing diameter.*
4. *Table not to be used in Ohio case study areas.*

324.4 Post and wall construction. *Posts shall be three (3) ply un-spliced, reinforced spliced or solid wood and shall not be less than 4 inch by 6 inch nominal size. Posts shall comply with the requirements of Section 317.*

324.4.1 Uplift protection: *Posts shall have uplift protection by one of the following methods:*

1. *Two 2x6x12 inch post uplift protection blocks attached to each side of the base of the post. The post uplift blocks shall be placed horizontally, attached per Table 324.7 and comply with Section 317;*

2. *12 inch high, concrete collar poured on top of footing around the post, with 2-#5x9 inch rebar placed through the post at 3 inches and 9 inches from bottom of post in opposite directions. The rebar ends must be 1 ½ inches from the soil. See Figure 324.1;*

324.4.2 Post Spacing. *The maximum spacing for posts shall be (eight) 8 feet on center.*

FIGURE 324
POST AND FRAME WALL SECTION.
(NO SCALE)

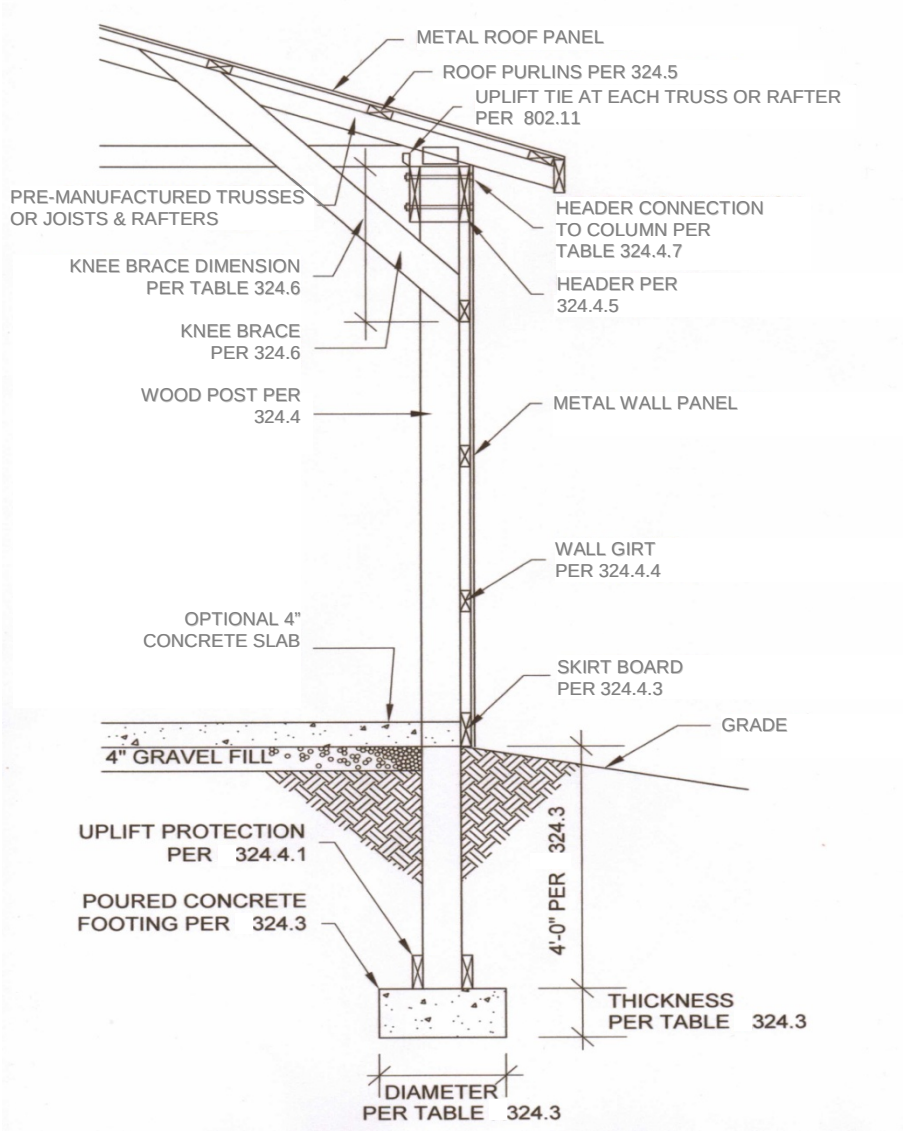

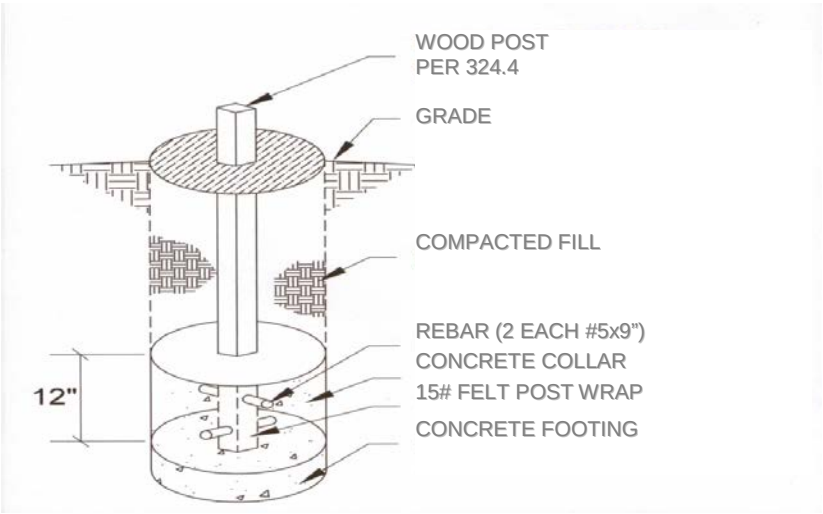

FIGURE 324.1
POST UPLIFT PROTECTION EXCEPTION
(NO SCALE)

324.4.3 Skirt Boards. *Skirt boards shall be treated lumber meeting the requirements of Section 317 and attached per Table 324.7.*

324.4.4 Wall girts. *Wall girts shall be not less than 2 x 4 inches nominal and spaced not more than twenty-four (24) inches on center.*

324.4.5 Load bearing beams and headers: *Load bearing beams and headers shall comply with Table 502.5(1).*

Exceptions.

1. *Bearing beams are not required if the trusses or ceiling joists and rafters bear directly on the posts.*

2. *Headers in the gable-end wall which do not support more than five square feet of wall area per lineal foot of header shall be sized per Table 324.4.5.*

TABLE 324.4.5
GABLE END HEADER SIZES.

Opening Width (feet)	*10*	*12*	*16*
Header Size (inches)	*2-2x8*	*2-2x10*	*2-2x12*

324.4.6 Bracing. *Wall bracing shall be provided to resist all racking and shearing forces and must comply with the applicable provisions of section*

602.10 or by installing 2x6 diagonal cross braces in the bays between adjacent posts as described in this section. The diagonal cross braces shall be placed from the top header or girt to the next adjacent post at the skirt board. The cross bracing shall be placed or installed on all sides of the building and shall be spaced at a maximum of 25 feet on center and within 12 feet of the corners of the building and attached per Table 324.7. Any splices of the diagonal brace required due to excessive length, must lap over two consecutive wall girts.

324.4.7 Beams supporting trusses or rafters and ceiling joists attachment to column. *Bearing beams supporting roof trusses or rafters and ceiling joists shall be connected to the posts by one of the following methods:*

1. *Bolts that are ½ inch diameter through-bolted to the side of the post;*
2. *Bolts that are ½ inch diameter, directly attached to a 3-ply post notch, enclosing the truss or rafter at the top of post; or*
3. *Other fasteners with minimum shear or withdraw values stated in Table 324.4.7*

324.4.7.1 Number of fasteners. *The minimum numbers of through bolts or other fasteners with minimum shears or withdraw values required per Table 324.4.7.*

TABLE 324.4.7
BEAM OR TRUSS CONNECTION AT POSTS MINIMUM FASTENERS OR TOTAL SHEAR OR WITHDRAW VALUES [a,b,c]

	Building Width (Length of Truss) including overhang (feet)			
	24	*28*	*32*	*36*
Shear or withdraw (pounds) 20 lb snow load	*3360*	*3920*	*4480*	*5040*
Number of Bolts, 20 lb roof snow load	*2*	*2*	*2*	*3*
Shear or withdraw (pounds) 30 lb roof snow load	*4320*	*5040*	*5760*	*6480*
Number of Bolts, 30 lb roof snow load	*2*	*3*	*3*	*3*

a. Based upon truss loads of 20 or 30 PSF live or snow load top chord, 10 PSF dead load top chord, 5 PSF live load on the bottom chord and no live load on the bottom chord.
b. Based upon post spacing at intervals not exceeding 8 feet.
c. When beams are attached at each side of the column and fasteners do not extend through both beams such as through-bolts, the required values are one-half the amount shown above for each beam.

324.5 Roof purlins. *Roof purlins shall be a minimum of 4x2 SPF#2 laid flat for spans up to 4 feet, and 4x2 SPF#2 laid on edge for spans up to 8 feet. Roof purlins shall be spaced not more than 24 inches on center.*

324.6 Knee bracing: *A 2x6 brace shall extend from the post to the top chord of the truss or rafter adjacent to the post at a 45 degree angle. The vertical distance down from the bottom chord of the truss or ceiling joist to the point where the brace attaches to the posts shall be in compliance with Table 324.6 as shown on Figure 324. Trusses or rafters must be spaced such that they align with the post intervals. Attachment of knee brace shall be per Table 324.7.*

TABLE 324.6
KNEE BRACE VERTICAL DISTANCE.

Wall Height	***Vertical Dimension***
8'-0" and 9'-0"	*1'-6"*
10'-0" and 11'-0"	*2'-0"*
12'-0" and 13'-0"	*3'-0"*
14'-0" through 16'-0"	*4'-0"*

324.7 Attachment details. *Structural fastener details for post and frame buildings shall comply with Table 324.7.*

TABLE 324.7
STRUCTURAL FASTENERS

Fastener Schedule for Structural Members		
Description of Building Element	***Number and Type of Fastener***	***Attachment type***
Uplift blocking to post	*5-16d Hot Dipped Galvanized*	*Each block*
Skirt board to post	*2-16d Hot Dipped Galvanized*	*Face nail*
Wall girt to post	*2-16d Hot Dipped Galvanized*	*Face nail*
Diagonal cross bracing to post	*2-16d Hot Dipped Galvanized*	*Face nail*
Diagonal cross bracing to skirt board	*2-10d Hot Dipped Galvanized*	*Face nail*
Diagonal cross bracing to wall girts, beam, or header	*2-10d*	*Face nail*
Knee brace to post	*3-16d Hot Dipped Galvanized*	*Face nail*
Knee brace to top chord of truss or rafter	*3-10d*	*Face nail*
Knee brace to bottom chord of truss or ceiling joist	*3-10d*	*Face nail*
Roof purlin to truss or rafter with span of 2' or 4'	*2-16d*	*Face nail*
Roof purlin to truss or rafter with span of 8'	*Mechanical fastener with uplift protection greater than 225 pounds.*	*Per manufacturer installation manual*

324.8 Roof trusses. *Engineered roof trusses, where used, shall be accompanied by drawings sealed by the registered design professional responsible for their preparation and shall be submitted to the residential building official for approval prior to the framing inspection. The truss design shall comply with Sections 802.10 and 802.11 and shall account for all loads imposed on the truss as a result of the prescriptive requirements of this section.*

4101:8-5-01 Floors.

[Comment: When a reference is made within this rule to a federal statutory provision, an industry consensus standard, or any other technical publication, the specific date and title of the publication as well as the name and address of the promulgating agency are listed in rule 4101:8-44-01 of the Administrative Code. The application of the referenced standards shall be limited and as prescribed in section 102.5 of rule 4101:8-1-01 of the Administrative Code.]

SECTION 501
GENERAL

501.1 Application. The provisions of this chapter shall control the design and construction of the floors for all buildings including the floors of attic spaces used to house mechanical or plumbing fixtures and equipment.

501.2 Requirements. Floor construction shall be capable of accommodating all loads according to Section 301 and of transmitting the resulting loads to the supporting structural elements.

SECTION 502
WOOD FLOOR FRAMING

502.1 Identification. Load-bearing dimension lumber for joists, beams and girders shall be identified by a grade mark of a lumber grading or inspection agency that has been approved by an accreditation body that complies with DOC PS 20. In lieu of a grade mark, a certificate of inspection issued by *an approved* lumber grading or inspection agency meeting the requirements of this section shall be accepted.

502.1.1 Preservative-treated lumber. Preservative treated dimension lumber shall also be identified as required by Section ~~319.1~~ 317.2.

502.1.2 Blocking and subflooring. Blocking shall be a minimum of utility grade lumber. Subflooring may be a minimum of utility grade lumber or No. 4 common grade boards.

502.1.3 End-jointed lumber. Approved end-jointed lumber identified by a grade mark conforming to Section 502.1 may be used interchangeably with solid-sawn members of the same species and grade.

502.1.4 Prefabricated wood I-joists. Structural capacities and design provisions for prefabricated wood I-joists shall be established and monitored in accordance with ASTM D 5055.

502.1.5 Structural glued laminated timbers. Glued laminated timbers shall be manufactured and identified as required in ANSI/AITC A190.1 and ASTM D 3737.

502.1.6 Structural log members. Stress grading of structural log members of nonrectangular shape, as typically used in log buildings, shall be in accordance with ASTM D 3957. Such structural log members shall be identified by the grade mark of an approved lumber grading or inspection agency. In lieu of a grade mark on the material, a certificate of inspection as to species and grade issued by *an approved* lumber-grading or inspection agency meeting the requirements of this section shall be accepted.

502.1.7 Exterior wood/plastic composite deck boards. Wood/plastic composites used in exterior deck boards shall comply with the provisions of Section 317.4.

502.2 Design and construction. Floors shall be designed and constructed in accordance with the provisions of this chapter, Figure 502.2 and Sections 317 and 318 or in accordance with AF&PA/NDS.

502.2.1 Framing at braced wall lines. A load path for lateral forces shall be provided between floor framing and braced wall panels located above or below a floor, as specified in Section ~~602.10.6~~ 602.10.8.

502.2.2 Decks. Where supported by attachment to an exterior wall, decks shall be positively anchored to the primary structure and designed for both vertical and lateral loads as applicable. Such attachment shall not be accomplished by the use of toenails or nails subject to withdrawal. Where positive connection to the primary building structure cannot be verified during inspection, decks shall be self-supporting. For decks with cantilevered framing members, connections to exterior walls or other framing members, shall be designed and constructed to resist uplift resulting from the full live load specified in Table 301.5 acting on the cantilevered portion of the deck.

502.2.2.1 Deck ledger connection to band joist. For decks supporting a total design load of 50 pounds per square foot (2394 Pa) [40 pounds per square foot (1915 Pa) live load plus 10 pounds per square foot (479 Pa)

dead load], the connection between a deck ledger of pressure-preservative-treated Southern Pine, incised pressure-preservative-treated Hem-Fir or approved decay-resistant species, and a 2-inch (51 mm) nominal lumber band joist bearing on a sill plate or wall plate shall be constructed with ½-inch (12.7 m) lag screws or bolts with washers in accordance with Table 502.2.2.1. Lag screws, bolts and washers shall be hot-dipped galvanized or stainless steel.

502.2.2.1.1 Placement of lag screws or bolts in deck ledgers. The lag screws or bolts shall be placed 2 inches (51 mm) in from the bottom or top of the deck ledgers and between 2 and 5 inches (51 and 127 mm) in from the ends. The lag screws or bolts shall be staggered from the top to the bottom along the horizontal run of the deck ledger.

502.2.2.2 Alternate deck ledger connections. Deck ledger connections not conforming to Table 502.2.2.1 shall be designed in accordance with accepted engineering practice. Girders supporting deck joists shall not be supported on deck ledgers or band joists. Deck ledgers shall not be supported on stone or masonry veneer.

502.2.2.3 Deck lateral load connection. ~~The lateral load connection required by Section 502.2.2 shall be permitted to be in accordance with Figure 502.2.2.3. Hold-down tension devices shall be installed in not less than two locations per deck, and each device shall have an allowable stress design capacity of not less than 1500 pounds (6672 N).~~ *Deleted.*

502.2.2.4 Exterior wood/plastic composite deck boards. Wood/plastic composite deck boards shall be installed in accordance with the manufacturer's instructions.

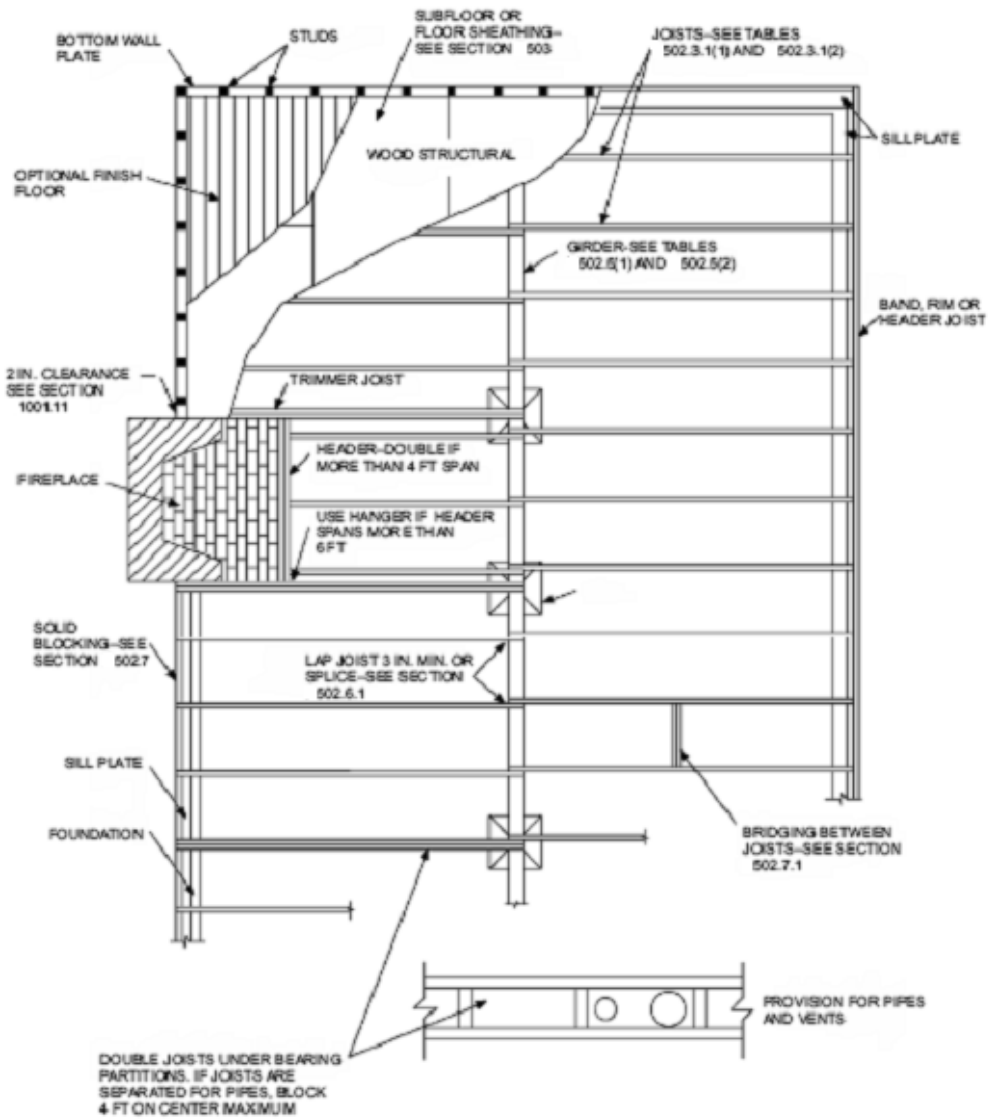

For SI: 1 inch = 25.4 mm.

FIGURE 502.2
FLOOR CONSTRUCTION

TABLE 502.2.2.1
FASTENER SPACING FOR A SOUTHERN PINE OR HEM-FIR DECK LEDGER AND A 2-INCH NOMINAL SOLID-SAWN SPRUCE-PINE-FIR BAND JOIST[c, f, g]
(Deck live load = 40 psf, deck dead load = 10 psf)

JOIST SPAN	**6' and less**	**6' 1" to 8'**	**8' 1" to 10'**	**10' 1" to 12'**	**12' 1 "to 14'**	**14' 1" to 16'**	**16' 1" to 18'**
Connection details	**On-center spacing of fasteners[d, e]**						
½ inch diameter lag screw with $^{15}/_{32}$ inch maximum sheathing[a]	30	23	18	15	13	11	10

½ inch diameter bolt with $^{15}/_{32}$ inch maximum sheathing	36	36	34	29	24	21	19
½ inch diameter bolt with $^{15}/_{32}$ inch maximum sheathing and ½ inch stacked washers[b, h]	36	36	29	24	21	18	16

For SI: 1 inch = 25.4 mm, 1 foot = 304.8 mm. 1 pound per square foot = 0.0479kPa.

a. The tip of the lag screw shall fully extend beyond the inside face of the band joist.

b. The maximum gap between the face of the ledger board and face of the wall sheathing shall be ½″.

c. Ledgers shall be flashed to prevent water from contacting the house band joist.

d. Lag screws and bolts shall be staggered in accordance with Section 502.2.2.1.1.

e. Deck ledger shall be minimum 2×8 pressure-preservative-treated No.2 grade lumber, or other approved materials as established by standard engineering practice.

f. When solid-sawn pressure-preservative-treated deck ledgers are attached to a minimum 1 inch thick engineered wood product (structural composite lumber, laminated veneer lumber or wood structural panel band joist), the ledger attachment shall be designed in accordance with accepted engineering practice.

g. A minimum 1 ×9½ Douglas Fir laminated veneer lumber rimboard shall be permitted in lieu of the 2-inch nominal band joist.

h. Wood structural panel sheathing, gypsum board sheathing or foam sheathing not exceeding 1 inch in thickness shall be permitted. The maximum distance between the face of the ledger board and the face of the band joist shall be 1 inch.

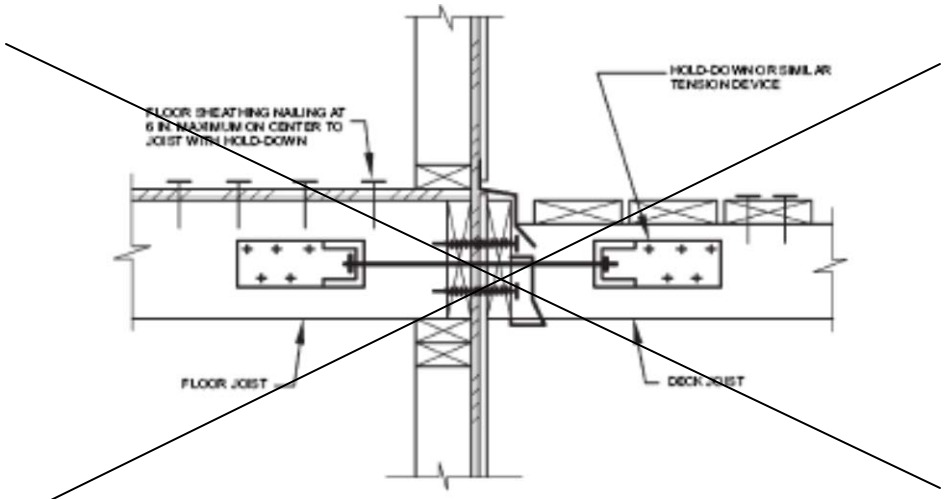

For SI: 1 inch = 25.4 mm.

FIGURE 502.2.2.3
~~DECK ATTACHMENT FOR LATERAL LOADS~~ *Deleted.*

502.3 Allowable joist spans. Spans for floor joists shall be in accordance with Tables 502.3.1(1) and 502.3.1(2). For other grades and species and for other loading conditions, refer to the AF&PA Span Tables for Joists and Rafters

502.3.1 Sleeping areas and attic joists. Table 502.3.1(1) shall be used to determine the maximum allowable span of floor joists that support sleeping areas and attics that are accessed by means of a fixed stairway in accordance with Section 311.7 provided that the design live load does not exceed 30 pounds per square foot (1.44. kPa) and the design dead load does not exceed 20 pounds per square foot (0.96 kPa). The allowable span of ceiling joists that support attics used for limited storage or no storage shall be determined in accordance with Section 802.4.

502.3.2 Other floor joists. Table 502.3.1(2) shall be used to determine the maximum allowable span of floor joists that support all other areas of the building, other than sleeping rooms and attics, provided that the design live load does not exceed 40 pounds per square foot (1.92 kPa) and the design dead load does not exceed 20 pounds per square foot (0.96 kPa).

502.3.3 Floor cantilevers. Floor cantilever spans shall not exceed the nominal depth of the wood floor joist. Floor cantilevers constructed in accordance with Table 502.3.3(1) shall be permitted when supporting a light-frame bearing wall and roof only. Floor cantilevers supporting an exterior balcony are permitted to be constructed in accordance with Table 502.3.3(2).

502.4 Joists under bearing partitions. Joists under parallel bearing partitions shall be of adequate size to support the load. Double joists, sized to adequately support the load, that are separated to permit the installation of piping or vents shall be full depth solid blocked with lumber not less than 2 inches (51 mm) in nominal thickness spaced not more than 4 feet (1219 mm) on center. Bearing partitions perpendicular to joists shall not be offset from supporting girders, walls or partitions more than the joist depth unless such joists are of sufficient size to carry the additional load.

502.5 Allowable girder spans. The allowable spans of girders fabricated of dimension lumber shall not exceed the values set forth in Tables 502.5(1) and 502.5(2).

502.6 Bearing. The ends of each joist, beam or girder shall have not less than 1.5 inches (38 mm) of bearing on wood or metal and not less than 3 inches (76 mm) on masonry or concrete except where supported on a 1-inch-by-4-inch (25.4 mm by 102 mm) ribbon strip and nailed to the adjacent stud or by the use of approved joist hangers.

502.6.1 Floor systems. Joists framing from opposite sides over a bearing support shall lap a minimum of 3 inches (76 mm) and shall be nailed together with a minimum three 10d face nails. A wood or metal splice with strength equal to or greater than that provided by the nailed lap is permitted.

502.6.2 Joist framing. Joists framing into the side of a wood girder shall be supported by approved framing anchors or on ledger strips not less than nominal 2 inches by 2 inches (51 mm by 51 mm).

502.7 Lateral restraint at supports. Joists shall be supported laterally at the ends by full-depth solid blocking not less than 2 inches (51 mm) nominal in thickness; or by attachment to a full-depth header, band or rim joist, or to an adjoining stud or shall be otherwise provided with lateral support to prevent rotation.

Exceptions:

1. Trusses, structural composite lumber, structural glued-laminated members and I-joists shall be supported laterally as required by the manufacturer's recommendations.

2. In Seismic Design Categories D_0, D_1 and D_2, lateral restraint shall also be provided at each intermediate support.

502.7.1 Bridging. Joists exceeding a nominal 2 inches by 12 inches (51 mm by 305 mm) shall be supported laterally by solid blocking, diagonal bridging (wood or metal), or a continuous 1-inch-by-3-inch (25.4 mm by 76 mm) strip nailed across the bottom of joists perpendicular to joists at intervals not exceeding 8 feet (2438 mm).

Exception: Trusses, structural composite lumber, structural glued-laminated members and I-joists shall be supported laterally as required by the manufacturer's recommendations.

502.8 Drilling and notching. Structural floor members shall not be cut, bored or notched in excess of the limitations specified in this section. See Figure 502.8.

502.8.1 Sawn lumber. Notches in solid lumber joists, rafters and beams shall not exceed one-sixth of the depth of the member, shall not be longer than one-third of the depth of the member and shall not be located in the middle one-third of the span. Notches at the ends of the member shall not exceed one-fourth the depth of the member. The tension side of members 4 inches (102

mm) or greater in nominal thickness shall not be notched except at the ends of the members. The diameter of holes bored or cut into members shall not exceed one-third the depth of the member. Holes shall not be closer than 2 inches (51 mm) to the top or bottom of the member, or to any other hole located in the member. Where the member is also notched, the hole shall not be closer than 2 inches (51 mm) to the notch.

502.8.2 Engineered wood products. Cuts, notches and holes bored in trusses, structural composite lumber, structural glue-laminated members or I-joists are prohibited except where permitted by the manufacturer's recommendations or where the effects of such alterations are specifically considered in the design of the member by a registered design professional.

502.9 Fastening. Floor framing shall be nailed in accordance with Table 602.3(1). Where posts and beam or girder construction is used to support floor framing, positive connections shall be provided to ensure against uplift and lateral displacement.

502.10 Framing of openings. Openings in floor framing shall be framed with a header and trimmer joists. When the header joist span does not exceed 4 feet (1219 mm), the header joist may be a single member the same size as the floor joist. Single trimmer joists may be used to carry a single header joist that is located within 3 feet (914 mm) of the trimmer joist bearing. When the header joist span exceeds 4 feet (1219 mm), the trimmer joists and the header joist shall be doubled and of sufficient cross section to support the floor joists framing into the header. Approved hangers shall be used for the header joist to trimmer joist connections when the header joist span exceeds 6 feet (1829 mm). Tail joists over 12 feet (3658 mm) long shall be supported at the header by framing anchors or on ledger strips not less than 2 inches by 2 inches (51 mm by 51 mm).

TABLE 502.3.1(1)
FLOOR JOIST SPANS FOR COMMON LUMBER SPECIES
(Residential sleeping areas, live load = 30 psf, L/△ = 360)[a]

JOIST SPACING (inches)	SPECIES AND GRADE	DEAD LOAD = 10 psf				DEAD LOAD = 20 psf			
		2×6	2×8	2×10	2×12	2×6	2×8	2×10	2×12
		Maximum floor joist spans							
		(ft - in.)	(ft - in.)	(ft - in.)	(ft - in.)	(ft - in.)	(ft - in.)	(ft - in.)	(ft - in.)

12	Douglas fir-larch	SS	12-6	16-6	21-0	25-7	12-6	16-6	21-0	25-7
	Douglas fir-larch	#1	12-0	15-10	20-3	24-8	12-0	15-7	19-0	22-0
	Douglas fir-larch	#2	11-10	15-7	19-10	23-0	11-6	14-7	17-9	20-7
	Douglas fir-larch	#3	9-8	12-4	15-0	17-5	8-8	11-0	13-5	15-7
	Hem-fir	SS	11-10	15-7	19-10	24-2	11-10	15-7	19-10	24-2
	Hem-fir	#1	11-7	15-3	19-5	23-7	11-7	15-2	18-6	21-6
	Hem-fir	#2	11-0	14-6	18-6	22-6	11-0	14-4	17-6	20-4
	Hem-fir	#3	9-8	12-4	15-0	17-5	8-8	11-0	13-5	15-7
	Southern pine	SS	12-3	16-2	20-8	25-1	12-3	16-2	20-8	25-1
	Southern pine	#1	12-0	15-10	20-3	24-8	12-0	15-10	20-3	24-8
	Southern pine	#2	11-10	15-7	19-10	24-2	11-10	15-7	18-7	21-9
	Southern pine	#3	10-5	13-3	15-8	18-8	9-4	11-11	14-0	16-8
	Spruce-pine-fir	SS	11-7	15-3	19-5	23-7	11-7	15-3	19-5	23-7
	Spruce-pine-fir	#1	11-3	14-11	19-0	23-0	11-3	14-7	17-9	20-7
	Spruce-pine-fir	#2	11-3	14-11	19-0	23-0	11-3	14-7	17-9	20-7
	Spruce-pine-fir	#3	9-8	12-4	15-0	17-5	8-8	11-0	13-5	15-7
16	Douglas fir-larch	SS	11-4	15-0	19-1	23-3	11-4	15-0	19-1	23-0
	Douglas fir-larch	#1	10-11	14-5	18-5	21-4	10-8	13-6	16-5	19-1
	Douglas fir-larch	#2	10-9	14-1	17-2	19-11	9-11	12-7	15-5	17-10
	Douglas fir-larch	#3	8-5	10-8	13-0	15-1	7-6	9-6	11-8	13-6
	Hem-fir	SS	10-9	14-2	18-0	21-11	10-9	14-2	18-0	21-11
	Hem-fir	#1	10-6	13-10	17-8	20-9	10-4	13-1	16-0	18-7
	Hem-fir	#2	10-0	13-2	16-10	19-8	9-10	12-5	15-2	17-7
	Hem-fir	#3	8-5	10-8	13-0	15-1	7-6	9-6	11-8	13-6
	Southern pine	SS	11-2	14-8	18-9	22-10	11-2	14-8	18-9	22-10
	Southern pine	#1	10-11	14-5	18-5	22-5	10-11	14-5	17-11	21-4
	Southern pine	#2	10-9	14-2	18-0	21-1	10-5	13-6	16-1	18-10
	Southern pine	#3	9-0	11-6	13-7	16-2	8-1	10-3	12-2	14-6
	Spruce-pine-fir	SS	10-6	13-10	17-8	21-6	10-6	13-10	17-8	21-4
	Spruce-pine-fir	#1	10-3	13-6	17-2	19-11	9-11	12-7	15-5	17-10
	Spruce-pine-fir	#2	10-3	13-6	17-2	19-11	9-11	12-7	15-5	17-10
	Spruce-pine-fir	#3	8-5	10-8	13-0	15-1	7-6	9-6	11-8	13-6
19.2	Douglas fir-larch	SS	10-8	14-1	18-0	21-10	10-8	14-1	18-0	21-0
	Douglas fir-larch	#1	10-4	13-7	16-9	19-6	9-8	12-4	15-0	17-5
	Douglas fir-larch	#2	10-1	12-10	15-8	18-3	9-1	11-6	14-1	16-3
	Douglas fir-larch	#3	7-8	9-9	11-10	13-9	6-10	8-8	10-7	12-4
	Hem-fir	SS	10-1	13-4	17-0	20-8	10-1	13-4	17-0	20-7
	Hem-fir	#1	9-10	13-0	16-4	19-0	9-6	12-0	14-8	17-0
	Hem-fir	#2	9-5	12-5	15-6	17-1	8-11	11-4	13-10	16-1
	Hem-fir	#3	7-8	9-9	11-10	13-9	6-10	8-8	10-7	12-4
	Southern pine	SS	10-6	13-10	17-8	21-6	10-6	13-10	17-8	21-6
	Southern pine	#1	10-4	13-7	17-4	21-1	10-4	13-7	16-4	19-6
	Southern pine	#2	10-1	13-4	16-5	19-3	9-6	12-4	14-8	17-2
	Southern pine	#3	8-3	10-6	12-5	14-9	7-4	9-5	11-1	13-2
	Spruce-pine-fir	SS	9-10	13-0	16-7	20-2	9-10	13-0	16-7	19-6
	Spruce-pine-fir	#1	9-8	12-9	15-8	18-3	9-1	11-6	14-1	16-3
	Spruce-pine-fir	#2	9-8	12-9	15-8	18-3	9-1	11-6	14-1	16-3
	Spruce-pine-fir	#3	7-8	9-9	11-10	13-9	6-10	8-8	10-7	12-4

24	Douglas fir-larch	SS	9-11	13-1	16-8	20-3	9-11	13-1	16-2	18-9
	Douglas fir-larch	#1	9-7	12-4	15-0	17-5	8-8	11-0	13-5	15-7
	Douglas fir-larch	#2	9-1	11-6	14-1	16-3	8-1	10-3	12-7	14-7
	Douglas fir-larch	#3	6-10	8-8	10-7	12-4	6-2	7-9	9-6	11-0
	Hem-fir	SS	9-4	12-4	15-9	19-2	9-4	12-4	15-9	18-5
	Hem-fir	#1	9-2	12-0	14-8	17-0	8-6	10-9	13-1	15-2
	Hem-fir	#2	8-9	11-4	13-10	16-1	8-0	10-2	12-5	14-4
	Hem-fir	#3	6-10	8-8	10-7	12-4	6-2	7-9	9-6	11-0
	Southern pine	SS	9-9	12-10	16-5	19-11	9-9	12-10	16-5	19-11
	Southern pine	#1	9-7	12-7	16-1	19-6	9-7	12-4	14-7	17-5
	Southern pine	#2	9-4	12-4	14-8	17-2	8-6	11-0	13-1	15-5
	Southern pine	#3	7-4	9-5	11-1	13-2	6-7	8-5	9-11	11-10
	Spruce-pine-fir	SS	9-2	12-1	15-5	18-9	9-2	12-1	15-0	17-5
	Spruce-pine-fir	#1	8-11	11-6	14-1	16-3	8-1	10-3	12-7	14-7
	Spruce-pine-fir	#2	8-11	11-6	14-1	16-3	8-1	10-3	12-7	14-7
	Spruce-pine-fir	#3	6-10	8-8	10-7	12-4	6-2	7-9	9-6	11-0

For SI: 1 inch = 25.4 mm, 1 foot = 304.8 mm, 1 pound per square foot = 0.0479 kPa.

Note: Check sources for availability of lumber in lengths greater than 20 feet.

a. Dead load limits for townhouses in Seismic Design Category C and all structures in Seismic Design Categories D_0, D_1 and D_2 shall be determined in accordance with Section 301.2.2.2.1.

TABLE 502.3.1(2)
FLOOR JOIST SPANS FOR COMMON LUMBER SPECIES
(Residential living areas, live load = 40 psf, L/Δ = 360)[b]

JOIST SPACING (inches)	SPECIES AND GRADE		DEAD LOAD = 10 psf				DEAD LOAD = 20 psf			
			2×6	2×8	2×10	2×12	2×6	2×8	2×10	2×12
			Maximum floor joist spans							
			(ft - in.)	(ft - in.)	(ft - in.)	(ft - in.)	(ft - in.)	(ft - in.)	(ft - in.)	(ft - in.)
12	Douglas fir-larch	SS	11-4	15-0	19-1	23-3	11-4	15-0	19-1	23-3
	Douglas fir-larch	#1	10-11	14-5	18-5	22-0	10-11	14-2	17-4	20-1
	Douglas fir-larch	#2	10-9	14-2	17-9	20-7	10-6	13-3	16-3	18-10
	Douglas fir-larch	#3	8-8	11-0	13-5	15-7	7-11	10-0	12-3	14-3
	Hem-fir	SS	10-9	14-2	18-0	21-11	10-9	14-2	18-0	21-11
	Hem-fir	#1	10-6	13-10	17-8	21-6	10-6	13-10	16-11	19-7
	Hem-fir	#2	10-0	13-2	16-10	20-4	10-0	13-1	16-0	18-6
	Hem-fir	#3	8-8	11-0	13-5	15-7	7-11	10-0	12-3	14-3
	Southern pine	SS	11-2	14-8	18-9	22-10	11-2	14-8	18-9	22-10
	Southern pine	#1	10-11	14-5	18-5	22-5	10-11	14-5	18-5	22-5
	Southern pine	#2	10-9	14-2	18-0	21-9	10-9	14-2	16-11	19-10
	Southern pine	#3	9-4	11-11	14-0	16-8	8-6	10-10	12-10	15-3
	Spruce-pine-fir	SS	10-6	13-10	17-8	21-6	10-6	13-10	17-8	21-6
	Spruce-pine-fir	#1	10-3	13-6	17-3	20-7	10-3	13-3	16-3	18-10
	Spruce-pine-fir	#2	10-3	13-6	17-3	20-7	10-3	13-3	16-3	18-10
	Spruce-pine-fir	#3	8-8	11-0	13-5	15-7	7-11	10-0	12-3	14-3

16	Douglas fir-larch	SS	10-4	13-7	17-4	21-1	10-4	13-7	17-4	21-0
	Douglas fir-larch	#1	9-11	13-1	16-5	19-1	9-8	12-4	15-0	17-5
	Douglas fir-larch	#2	9-9	12-7	15-5	17-10	9-1	11-6	14-1	16-3
	Douglas fir-larch	#3	7-6	9-6	11-8	13-6	6-10	8-8	10-7	12-4
	Hem-fir	SS	9-9	12-10	16-5	19-11	9-9	12-10	16-5	19-11
	Hem-fir	#1	9-6	12-7	16-0	18-7	9-6	12-0	14-8	17-0
	Hem-fir	#2	9-1	12-0	15-2	17-7	8-11	11-4	13-10	16-1
	Hem-fir	#3	7-6	9-6	11-8	13-6	6-10	8-8	10-7	12-4
	Southern pine	SS	10-2	13-4	17-0	20-9	10-2	13-4	17-0	20-9
	Southern pine	#1	9-11	13-1	16-9	20-4	9-11	13-1	16-4	19-6
	Southern pine	#2	9-9	12-10	16-1	18-10	9-6	12-4	14-8	17-2
	Southern pine	#3	8-1	10-3	12-2	14-6	7-4	9-5	11-1	13-2
	Spruce-pine-fir	SS	9-6	12-7	16-0	19-6	9-6	12-7	16-0	19-6
	Spruce-pine-fir	#1	9-4	12-3	15-5	17-10	9-1	11-6	14-1	16-3
	Spruce-pine-fir	#2	9-4	12-3	15-5	17-10	9-1	11-6	14-1	16-3
	Spruce-pine-fir	#3	7-6	9-6	11-8	13-6	6-10	8-8	10-7	12-4
19.2	Douglas fir-larch	SS	9-8	12-10	16-4	19-10	9-8	12-10	16-4	19-2
	Douglas fir-larch	#1	9-4	12-4	15-0	17-5	8-10	11-3	13-8	15-11
	Douglas fir-larch	#2	9-1	11-6	14-1	16-3	8-3	10-6	12-10	14-10
	Douglas fir-larch	#3	6-10	8-8	10-7	12-4	6-3	7-11	9-8	11-3
	Hem-fir	SS	9-2	12-1	15-5	18-9	9-2	12-1	15-5	18-9
	Hem-fir	#1	9-0	11-10	14-8	17-0	8-8	10-11	13-4	15-6
	Hem-fir	#2	8-7	11-3	13-10	16-1	8-2	10-4	12-8	14-8
	Hem-fir	#3	6-10	8-8	10-7	12-4	6-3	7-11	9-8	11-3
	Southern pine	SS	9-6	12-7	16-0	19-6	9-6	12-7	16-0	19-6
	Southern pine	#1	9-4	12-4	15-9	19-2	9-4	12-4	14-11	17-9
	Southern pine	#2	9-2	12-1	14-8	17-2	8-8	11-3	13-5	15-8
	Southern pine	#3	7-4	9-5	11-1	13-2	6-9	8-7	10-1	12-1
	Spruce-pine-fir	SS	9-0	11-10	15-1	18-4	9-0	11-10	15-1	17-9
	Spruce-pine-fir	#	8-9	11-6	14-1	16-3	8-3	10-6	12-10	14-10
	Spruce-pine-fir	#2	8-9	11-6	14-1	16-3	8-3	10-6	12-10	14-10
	Spruce-pine-fir	#3	6-10	8-8	10-7	12-4	6-3	7-11	9-8	11-3
24	Douglas fir-larch	SS	9-0	11-11	15-2	18-5	9-0	11-11	14-9	17-1
	Douglas fir-larch	#1	8-8	11-0	13-5	15-7	7-11	10-0	12-3	14-3
	Douglas fir-larch	#2	8-1	10-3	12-7	14-7	7-5	9-5	11-6	13-4
	Douglas fir-larch	#3	6-2	7-9	9-6	11-0	5-7	7-1	8-8	10-1
	Hem-fir	SS	8-6	11-3	14-4	17-5	8-6	11-3	14-4	16-10[a]
	Hem-fir	#1	8-4	10-9	13-1	15-2	7-9	9-9	11-11	13-10
	Hem-fir	#2	7-11	10-2	12-5	14-4	7-4	9-3	11-4	13-1
	Hem-fir	#3	6-2	7-9	9-6	11-0	5-7	7-1	8-8	10-1
	Southern pine	SS	8-10	11-8	14-11	18-1	8-10	11-8	14-11	18-1
	Southern pine	#1	8-8	11-5	14-7	17-5	8-8	11-3	13-4	15-11
	Southern pine	#2	8-6	11-0	13-1	15-5	7-9	10-0	12-0	14-0
	Southern pine	#3	6-7	8-5	9-11	11-10	6-0	7-8	9-1	10-9
	Spruce-pine-fir	SS	8-4	11-0	14-0	17-0	8-4	11-0	13-8	15-11
	Spruce-pine-fir	#1	8-1	10-3	12-7	14-7	7-5	9-5	11-6	13-4
	Spruce-pine-fir	#2	8-1	10-3	12-7	14-7	7-5	9-5	11-6	13-4
	Spruce-pine-fir	#3	6-2	7-9	9-6	11-0	5-7	7-1	-8	10-1

For SI: 1 inch = 25.4 mm, 1 foot = 304.8 mm, 1 pound per square foot = 0.0479 kPa.

Note: Check sources for availability of lumber in lengths greater than 20 feet.

a. End bearing length shall be increased to 2 inches.

b. Dead load limits for townhouses in Seismic Design Category C and all structures in Seismic Design Categories D_0, D_1, and D_2 shall be determined in accordance with Section 301.2.2.2.1.

TABLE 502.3.3(1)
CANTILEVER SPANS FOR FLOOR JOISTS SUPPORTING LIGHT-FRAME EXTERIOR BEARING WALL AND ROOF ONLY[a, b, c, f, g, h]
(Floor Live Load <40 psf, Roof Live Load <20 psf)

Member & Spacing	Maximum Cantilever Span (Uplift Force at Backspan Support in Lbs.)[d, e]											
	Ground Snow Load											
	20 psf			30 psf			50 psf			70 psf		
	Roof Width			Roof Width			Roof Width			Roof Width		
	24 ft	32 ft	40 ft	24 ft	32 ft	40 ft	24 ft	32 ft	40 ft	24 ft	32 ft	40 ft
2 x 8 @ 12”	20” (177)	15” (227)	-	18” (209)	-	-	-	-	-	-	-	-
2 x 10 @ 16”	29” (228)	21” (297)	16” (364)	26” (271)	18” (354)	-	20” (375)	-	-	-	-	-
2 x 10 @ 12”	36” (166)	26” (219)	20” (270)	34” (198)	22” (263)	16” (324)	26” (277)	-	-	19” (356)	-	-
2 x 12 @ 16”	-	32” (287)	25” (356)	36” (263)	29” (345)	21” (428)	29” (367)	20” (484)	-	23” (471)	-	-
2 x 12 @ 12”	-	42” (209)	31” (263)	-	37” (253)	27” (317)	36” (271)	27” (358)	17” (447)	31” (348)	19” (462)	-
2 x 12 @ 8”	-	48” (136)	45” (169)	-	48” (164)	38” (206)	-	40” (233)	26” (294)	36” (230)	29” (304)	18” (379)

For SI: 1 inch = 25.4 mm, 1 foot = 304.8 mm, 1 pound per square foot = 0.0479kPa.

a. Tabulated values are for clear-span roof supported solely by exterior bearing walls.

b. Spans are based on No. 2 Grade lumber of Douglas fir-larch, hem-fir, southern pine, and spruce-pine-fir for repetitive (3 or more) members.

c. Ratio of backspan to cantilever span shall be at least 3:1.

d. Connections capable of resisting the indicated uplift force shall be provided at the backspan support.

e. Uplift force is for a backspan to cantilever span ratio of 3:1. Tabulated uplift values are permitted to be reduced by multiplying by a factor equal to 3 divided by the actual backspan ratio provided (3/backspan ratio).

f. See Section 301.2.2.2.5, Item1, for additional limitations on cantilevered floor joists for detached one-, two- *and three*-family dwellings in Seismic Design Category D_0, D_1, or D_2 and townhouses in Seismic Design Category C, D_0, D_1, or D_2.

g. A full-depth rim joist shall be provided at the unsupported end of the cantilever joists. Solid blocking shall be provided at the supported end.

h. Linear interpolation shall be permitted for building widths and ground snow loads other than shown.

TABLE 502.3.3(2)
CANTILEVER SPANS FOR FLOOR JOISTS SUPPORTING EXTERIOR BALCONY[a, b, e, f]

Member Size	Spacing	Maximum Cantilever Span (Uplift Force at Backspan Support in lb)[c, d]		
		Ground Snow Load		
		30 psf	50 psf	70 psf
2 ×8	12″	42″(139)	39″(156)	34″(165)
2 ×8	16″	36″(151)	34″(171)	29″(180)
2 ×10	12″	61″(164)	57″(189)	49″(201)
2 ×10	16″	53″(180)	49″(208)	42″(220)
2 ×10	24″	43″(212)	40″(241)	34″(255)
2 ×12	16″	72″(228)	67″(260)	57″(268)
2 ×12	24″	58″(279)	54″(319)	47″(330)

For SI: 1 inch = 25.4 mm, 1 pound per square foot = 0.0479kPa.

a. Spans are based on No. 2 Grade lumber of Douglas fir-larch, hem-fir, southern pine, and spruce-pine-fir for repetitive (3 or more) members.

b. Ratio of backspan to cantilever span shall be at least 2:1.

c. Connections capable of resisting the indicated uplift force shall be provided at the backspan support.

d. Uplift force is for a backspan to cantilever span ratio of 2:1. Tabulated uplift values are permitted to be reduced by multiplying by a factor equal to 2 divided by the actual backspan ratio provided (2/backspan ratio).

e. A full-depth rim joist shall be provided at the unsupported end of the cantilever joists. Solid blocking shall be provided at the supported end.

f. Linear interpolation shall be permitted for ground snow loads other than shown.

TABLE 502.5(1)
GIRDER SPANS[a] AND HEADER SPANS[a] FOR EXTERIOR BEARING WALLS
(Maximum spans for Douglas fir-larch, hem-fir, southern pine and spruce-pine-fir[b] and required number of jack studs)

GIRDERS AND HEADERS SUPPORT-ING	SIZE	GROUND SNOW LOAD (psf)[e]																	
		30						50						70					
		Building width[c] (feet)																	
		20		28		36		20		28		36		20		28		36	
		Span	NJ[d]	Span	NJ[d]	Span	NJ[d]	Span	NJ[d]	Span	NJ[d]	Span	NJ[d]	Span	NJ[d]	Span	NJ[d]	Span	NJ[d]
Roof and ceiling	2-2×4	3-6	1	3-2	1	2-10	1	3-2	1	2-9	1	2-6	1	2-10	1	2-6	1	2-3	1
	2-2×6	5-5	1	4-8	1	4-2	1	4-8	1	4-1	1	3-8	2	4-2	1	3-8	2	3-3	2
	2-2×8	6-10	1	5-11	2	5-4	2	5-11	2	5-2	2	4-7	2	5-4	2	4-7	2	4-1	2
	2-2×10	8-5	2	7-3	2	6-6	2	7-3	2	6-3	2	5-7	2	6-6	2	5-7	2	5-0	2
	2-2×12	9-9	2	8-5	2	7-6	2	8-5	2	7-3	2	6-6	2	7-6	2	6-6	2	5-10	3
	3-2×8	8-4	1	7-5	1	6-8	1	7-5	1	6-5	2	5-9	2	6-8	1	5-9	2	5-2	2
	3-2×10	10-6	1	9-1	2	8-2	2	9-1	2	7-10	2	7-0	2	8-2	2	7-0	2	6-4	2
	3-2×12	12-2	2	10-7	2	9-5	2	10-7	2	9-2	2	8-2	2	9-5	2	8-2	2	7-4	2
	4-2×8	9-2	1	8-4	1	7-8	1	8-4	1	7-5	1	6-8	1	7-8	1	6-8	1	5-11	2
	4-2×10	11-8	1	10-6	1	9-5	2	10-6	1	9-1	2	8-2	2	9-5	2	8-2	2	7-3	2
	4-2×12	14-1	1	12-2	2	10-11	2	12-2	2	10-7	2	9-5	2	10-11	2	9-5	2	8-5	2
Roof, ceiling and one center-bearing floor	2-2×4	3-1	1	2-9	1	2-5	1	2-9	1	2-5	1	2-2	1	2-7	1	2-3	1	2-0	1
	2-2×6	4-6	1	4-0	1	3-7	2	4-1	1	3-7	2	3-3	2	3-9	2	3-3	2	2-11	2
	2-2×8	5-9	2	5-0	2	4-6	2	5-2	2	4-6	2	4-1	2	4-9	2	4-2	2	3-9	2
	2-2×10	7-0	2	6-2	2	5-6	2	6-4	2	5-6	2	5-0	2	5-9	2	5-1	2	4-7	3
	2-2×12	8-1	2	7-1	2	6-5	2	7-4	2	6-5	2	5-9	3	6-8	2	5-10	3	5-3	3
	3-2×8	7-2	1	6-3	2	5-8	2	6-5	2	5-8	2	5-1	2	5-11	2	5-2	2	4-8	2
	3-2×10	8-9	2	7-8	2	6-11	2	7-11	2	6-11	2	6-3	2	7-3	2	6-4	2	5-8	2
	3-2×12	10-2	2	8-11	2	8-0	2	9-2	2	8-0	2	7-3	2	8-5	2	7-4	2	6-7	2
	4-2×8	8-1	1	7-3	1	6-7	1	7-5	1	6-6	1	5-11	2	6-10	1	6-0	2	5-5	2
	4-2×10	10-1	1	8-10	2	8-0	2	9-1	2	8-0	2	7-2	2	8-4	2	7-4	2	6-7	2
	4-2×12	11-9	2	10-3	2	9-3	2	10-7	2	9-3	2	8-4	2	9-8	2	8-6	2	7-7	2
Roof, ceiling and one clear span floor	2-2×4	2-8	1	2-4	1	2-1	1	2-7	1	2-3	1	2-0	1	2-5	1	2-1	1	1-10	1
	2-2×6	3-11	1	3-5	2	3-0	2	3-10	2	3-4	2	3-0	2	3-6	2	3-1	2	2-9	2
	2-2×8	5-0	2	4-4	2	3-10	2	4-10	2	4-2	2	3-9	2	4-6	2	3-11	2	3-6	2
	2-2×10	6-1	2	5-3	2	4-8	2	5-11	2	5-1	2	4-7	3	5-6	2	4-9	2	4-3	3
	2-2×12	7-1	2	6-1	3	5-5	3	6-10	2	5-11	3	5-4	3	6-4	2	5-6	3	5-0	3
	3-2×8	6-3	2	5-5	2	4-10	2	6-1	2	5-3	2	4-8	2	5-7	2	4-11	2	4-5	2

	3-2×10	7-7	2	6-7	2	5-11	2	7-5	2	6-5	2	5-9	2	6-10	2	6-0	2	5-4	2
	3-2×12	8-10	2	7-8	2	6-10	2	8-7	2	7-5	2	6-8	2	7-11	2	6-11	2	6-3	2
	4-2×8	7-2	1	6-3	2	5-7	2	7-0	1	6-1	2	5-5	2	6-6	1	5-8	2	5-1	2
	4-2×10	8-9	2	7-7	2	6-10	2	8-7	2	7-5	2	6-7	2	7-11	2	6-11	2	6-2	2
	4-2×12	10-2	2	8-10	2	7-11	2	9-11	2	8-7	2	7-8	2	9-2	2	8-0	2	7-2	2
Roof, ceiling and two center-bearing floors	2-2×4	2-7	1	2-3	1	2-0	1	2-6	1	2-2	1	1-11	1	2-4	1	2-0	1	1-9	1
	2-2×6	3-9	2	3-3	2	2-11	2	3-8	2	3-2	2	2-10	2	3-5	2	3-0	2	2-8	2
	2-2×8	4-9	2	4-2	2	3-9	2	4-7	2	4-0	2	3-8	2	4-4	2	3-9	2	3-5	2
	2-2×10	5-9	2	5-1	2	4-7	3	5-8	2	4-11	2	4-5	3	5-3	2	4-7	3	4-2	3
	2-2×12	6-8	2	5-10	3	5-3	3	6-6	2	5-9	3	5-2	3	6-1	3	5-4	3	4-10	3
	3-2×8	5-11	2	5-2	2	4-8	2	5-9	2	5-1	2	4-7	2	5-5	2	4-9	2	4-3	2
	3-2×10	7-3	2	6-4	2	5-8	2	7-1	2	6-2	2	5-7	2	6-7	2	5-9	2	5-3	2
	3-2×12	8-5	2	7-4	2	6-7	2	8-2	2	7-2	2	6-5	3	7-8	2	6-9	2	6-1	3
	4-2×8	6-10	1	6-0	2	5-5	2	6-8	1	5-10	2	5-3	2	6-3	2	5-6	2	4-11	2
	4-2×10	8-4	2	7-4	2	6-7	2	8-2	2	7-2	2	6-5	2	7-7	2	6-8	2	6-0	2
	4-2×12	9-8	2	8-6	2	7-8	2	9-5	2	8-3	2	7-5	2	8-10	2	7-9	2	7-0	2
Roof, ceiling, and two clear span floors	2-2×4	2-1	1	1-8	1	1-6	2	2-0	1	1-8	1	1-5	2	2-0	1	1-8	1	1-5	2
	2-2×6	3-1	2	2-8	2	2-4	2	3-0	2	2-7	2	2-3	2	2-11	2	2-7	2	2-3	2
	2-2×8	3-10	2	3-4	2	3-0	3	3-10	2	3-4	2	2-11	3	3-9	2	3-3	2	2-11	3
	2-2×10	4-9	2	4-1	3	3-8	3	4-8	2	4-0	3	3-7	3	4-7	3	4-0	3	3-6	3
	2-2×12	5-6	3	4-9	3	4-3	3	5-5	3	4-8	3	4-2	3	5-4	3	4-7	3	4-1	4
	3-2×8	4-10	2	4-2	2	3-9	2	4-9	2	4-1	2	3-8	2	4-8	2	4-1	2	3-8	2
	3-2×10	5-11	2	5-1	2	4-7	3	5-10	2	5-0	2	4-6	3	5-9	2	4-11	2	4-5	3
	3-2×12	6-10	2	5-11	3	5-4	3	6-9	2	5-10	3	5-3	3	6-8	2	5-9	3	5-2	3
	4-2×8	5-7	2	4-10	2	4-4	2	5-6	2	4-9	2	4-3	2	5-5	2	4-8	2	4-2	2
	4-2×10	6-10	2	5-11	2	5-3	2	6-9	2	5-10	2	5-2	2	6-7	2	5-9	2	5-1	2
	4-2×12	7-11	2	6-10	2	6-2	3	7-9	2	6-9	2	6-0	3	7-8	2	6-8	2	5-11	3

For SI: 1 inch = 25.4 mm, 1 pound per square foot = 0.0479kPa.

a. Spans are given in feet and inches.

b. Tabulated values assume #2 grade lumber.

c. Building width is measured perpendicular to the ridge. For widths between those shown, spans are permitted to be interpolated.

d. NJ -Number of jack studs required to support each end. Where the number of required jack studs equals one, the header is permitted to be supported by an approved framing anchor attached to the full-height wall stud and to the header.

e. Use 30 psf ground snow load for cases in which ground snow load is less than 30 psf and the roof live load is equal to or less than 20 psf.

TABLE 502.5(2)
GIRDER SPANS[a] AND HEADER SPANS[a] FOR INTERIOR BEARING WALLS
(Maximum spans for Douglas fir-larch, hem-fir, southern pine and spruce-pine-fir[b] and required number of jack studs)

HEADERS AND GIRDERS SUPPORTING	SIZE	BUILDING WIDTH[c] (feet)					
		20		28		36	
		Span	NJ[d]	Span	NJ[d]	Span	NJ[d]
One floor only	2-2×4	3-1	1	2-8	1	2-5	1

	2-2×6	4-6	1	3-11	1	3-6	1
	2-2×8	5-9	1	5-0	2	4-5	2
	2-2×10	7-0	2	6-1	2	5-5	2
	2-2×12	8-1	2	7-0	2	6-3	2
	3-2×8	7-2	1	6-3	1	5-7	2
	3-2×10	8-9	1	7-7	2	6-9	2
	3-2×12	10-2	2	8-10	2	7-10	2
	4-2×8	9-0	1	7-8	1	6-9	1
	4-2×10	10-1	1	8-9	1	7-10	2
	4-2×12	11-9	1	10-2	2	9-1	2
Two floors	2-2×4	2-2	1	1-10	1	1-7	1
	2-2×6	3-2	2	2-9	2	2-5	2
	2-2×8	4-1	2	3-6	2	3-2	2
	2-2×10	4-11	2	4-3	2	3-10	3
	2-2×12	5-9	2	5-0	3	4-5	3
	3-2×8	5-1	2	4-5	2	3-11	2
	3-2×10	6-2	2	5-4	2	4-10	2
	3-2×12	7-2	2	6-3	2	5-7	3
	4-2×8	6-1	1	5-3	2	4-8	2
	4-2×10	7-2	2	6-2	2	5-6	2
	4-2×12	8-4	2	7-2	2	6-5	2

For SI: 1 inch = 25.4 mm, 1 foot = 304.8 mm.

a. Spans are given in feet and inches.

b. Tabulated values assume #2 grade lumber.

c. Building width is measured perpendicular to the ridge. For widths between those shown, spans are permitted to be interpolated.

d. NJ -Number of jack studs required to support each end. Where the number of required jack studs equals one, the header is permitted to be supported by an approved framing anchor attached to the full-height wall stud and to the header.

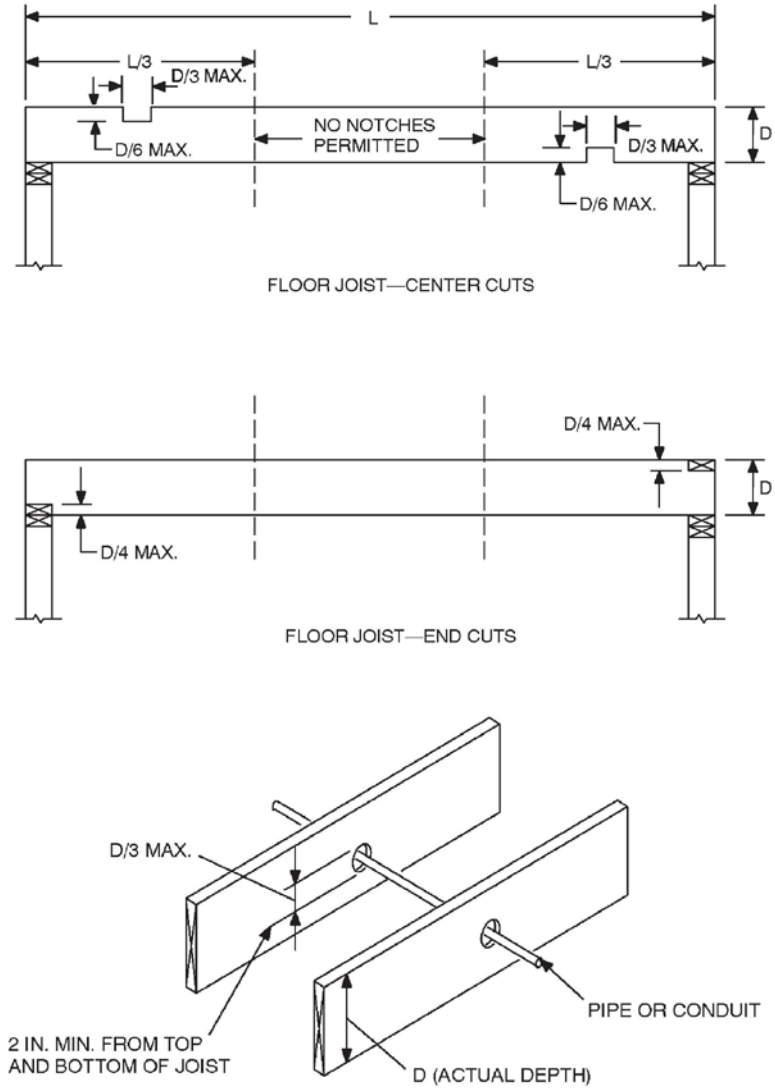

For SI: 1 inch = 25.4 mm.

FIGURE 502.8
CUTTING, NOTCHING AND DRILLING

502.11 Wood trusses.

502.11.1 Design. Wood trusses shall be designed in accordance with approved engineering practice. The design and manufacture of metal plate connected wood trusses shall comply with ANSI/TPI 1. The truss design drawings shall be prepared by a registered professional in accordance with Section *106.2*.

502.11.2 Bracing. Trusses shall be braced to prevent rotation and provide lateral stability in accordance with the requirements specified in the construction documents for the building and on the individual truss design drawings. In the absence of specific bracing requirements, trusses shall be braced in accordance with the Building Component Safety Information (BCSI

1-03) Guide to Good Practice for Handling, Installing & Bracing of Metal Plate Connected Wood Trusses.

502.11.3 Alterations to trusses. Truss members and components shall not be cut, notched, spliced or otherwise altered in any way without the approval of a registered design professional. Alterations resulting in the addition of load (e.g., HVAC equipment, water heater, etc.), that exceed the design load for the truss, shall not be permitted without verification that the truss is capable of supporting the additional loading.

502.11.4 Truss design drawings. Truss design drawings, prepared in compliance with Section 502.11.1, shall be submitted to the building official and approved prior to installation. Truss design drawings shall be provided with the shipment of trusses delivered to the job site. Truss design drawings shall include, at a minimum, the information specified below:

1. Slope or depth, span and spacing.

2. Location of all joints.

3. Required bearing widths.

4. Design loads as applicable:

    4.1 Top chord live load;

    4.2 Top chord dead load;

    4.3 Bottom chord live load;

    4.4 Bottom chord dead load;

    4.5 Concentrated loads and their points of application; and

    4.6 Controlling wind and earthquake loads.

5. Adjustments to lumber and joint connector design values for conditions of use.

6. Each reaction force and direction.

7. Joint connector type and description, e.g., size, thickness or gauge, and the dimensioned location of each joint connector except where symmetrically located relative to the joint interface.

8. Lumber size, species and grade for each member.

9. Connection requirements for:

    9.1 Truss-to-girder-truss;

    9.2 Truss ply-to-ply; and

    9.3 Field splices.

10. Calculated deflection ratio and/or maximum description for live and total load.

11. Maximum axial compression forces in the truss members to enable the building designer to design the size, connections and anchorage of the permanent continuous lateral bracing. Forces shall be shown on the truss drawing or on supplemental documents.

12. Required permanent truss member bracing location.

502.12 Draftstopping required. Draftstopping shall be provided in accordance with Section 302.12.

502.13 Fireblocking required. Fireblocking shall be provided in accordance with Section 302.11.

502.14 Fire Resistance of floors. *Floor assemblies, not required elsewhere in this code to be fire resistance rated, shall be provided with a ½ inch gypsum board membrane or a 5/8 inch wood structural panel membrane or an equivalent material on the underside of the floor framing member which complies with section 302.14.*

Exceptions:

1. *Floor assemblies located directly over a space protected by an automatic sprinkler system designed and installed in accordance with Sections 313.1.1 or 313.2.1.*

2. *Floor assemblies located directly over an underfloor space as referenced in section 408 which is not intended for storage or fuel-fired appliances.*

3. *Portions of floor assemblies can be unprotected when complying with the following:*

   3.1 The aggregate area of the unprotected portions shall not exceed 80 square feet per story.

   3.2 Fire blocking in accordance with Section 302.11.1 shall be installed along the perimeter of the unprotected portion to separate the unprotected portion from the remainder of the floor assembly.

4. *Wood floor assemblies using dimension lumber or structural composite lumber equal to or greater than 2-inch by 10-inch nominal dimension, or other approved floor assemblies demonstrating equivalent fire performance.*

SECTION 503
FLOOR SHEATHING

503.1 Lumber sheathing. Maximum allowable spans for lumber used as floor sheathing shall conform to Tables 503.1, 503.2.1.1(1) and 503.2.1.1(2).

503.1.1 End joints. End joints in lumber used as subflooring shall occur over supports unless end-matched lumber is used, in which case each piece shall bear on at least two joists. Subflooring may be omitted when joist spacing does not exceed 16 inches (406 mm) and a 1-inch (25.4 mm) nominal tongue-and-groove wood strip flooring is applied perpendicular to the joists.

TABLE 503.1
MINIMUM THICKNESS OF LUMBER FLOOR SHEATHING

JOIST OR BEAM SPACING (inches)	MINIMUM NET THICKNESS	
	Perpendicular to joist	Diagonal to joist
24	$^{11}/_{16}$	¾
16	$^{5}/_{8}$	$^{5}/_{8}$
48[a]	1½ T & G	N/A

54[b]		
60[c]		

For SI: 1 inch = 25.4 mm, 1 pound per square inch = 6.895kPa.

a. For this support spacing, lumber sheathing shall have a minimum F_b of 675 and minimum E of 1,100,000 (see AF&PA/NDS).

b. For this support spacing, lumber sheathing shall have a minimum F_b of 765 and minimum E of 1,400,000 (see AF&PA/NDS).

c. For this support spacing, lumber sheathing shall have a minimum F_b of 855 and minimum E of 1,700,000 (see AF&PA/NDS).

503.2 Wood structural panel sheathing.

503.2.1 Identification and grade. Wood structural panel sheathing used for structural purposes shall conform to DOC PS 1, DOC PS 2 or, when manufactured in Canada, CSA O437 or CSA O325. All panels shall be identified by a grade mark of certificate or inspection issued by an approved agency.

503.2.1.1 Subfloor and combined subfloor underlayment. Where used as subflooring or combination subfloor underlayment, wood structural panels shall be of one of the grades specified in Table 503.2.1.1(1). When sanded plywood is used as combination subfloor underlayment, the grade shall be as specified in Table 503.2.1.1(2).

TABLE 503.2.1.1(1)
ALLOWABLE SPANS AND LOADS FOR WOOD STRUCTURAL PANELS FOR ROOF AND SUBFLOOR SHEATHING AND COMBINATION SUBFLOOR UNDERLAYMENT[a, b, c]

SPAN RATING	MINIMUM NOMINAL PANEL THICKNESS (inch)	ALLOWABLE LIVE LOAD (psf)[h, l]		MAXIMUM SPAN (inches)		LOAD (pounds per square foot, at maximum span)		MAXIMUM SPAN (inches)
		SPAN @ 16" o.c.	SPAN @ 24" o.c.	With edge support[d]	Without edge support	Total load	Live load	
Sheathing[e]				Roof[f]				Subfloor[j]
16/0	$^3/_8$	30	—	16	16	40	30	0
20/0	$^3/_8$	50	—	20	20	40	30	0
24/0	$^3/_8$	100	30	24	20g	40	30	0
24/16	$^7/_{16}$	100	40	24	24	50	40	16
32/16	$^{15}/_{32}$, ½	180	70	32	28	40	30	16[h]
40/20	$^{19}/_{32}$, $^5/_8$	305	130	40	32	40	30	20[h, i]
48/24	$^{23}/_{32}$, $^3/_4$	—	175	48	36	45	35	24
60/32	$^7/_8$	—	305	60	48	45	35	32

Underlayment, C-C plugged, single floor[e]				Roof[f]				Combination subfloor underlayment[k]
16 o.c.	$^{19}/_{32}$, $^{5}/_{8}$	100	40	24	24	50	40	16[i]
20 o.c.	$^{19}/_{32}$, $^{5}/_{8}$	150	60	32	32	40	30	20[i, j]
24 o.c.	$^{23}/_{32}$, $^{3}/_{4}$	240	100	48	36	35	25	24
32 o.c.	$^{7}/_{8}$	—	185	48	40	50	40	32
48 o.c.	$^{13}/_{32}$, $1^{1}/_{8}$	—	290	60	48	50	40	48

For SI: 1 inch = 25.4 mm, 1 pound per square foot = 0.0479kPa.

a. The allowable total loads were determined using a dead load of 10 psf. If the dead load exceeds 10 psf, then the live load shall be reduced accordingly.

b. Panels continuous over two or more spans with long dimension (strength axis) perpendicular to supports. Spans shall be limited to values shown because of possible effect of concentrated loads.

c. Applies to panels 24 inches or wider.

d. Lumber blocking, panel edge clips (one midway between each support, except two equally spaced between supports when span is 48 inches), tongue-and-groove panel edges, or other approved type of edge support.

e. Includes Structural 1 panels in these grades.

f. Uniform load deflection limitation: $^{1}/_{180}$ of span under live load plus dead load, $^{1}/_{240}$ of span under live load only.

g. Maximum span 24 inches for $^{15}/_{32}$-and ½-inch panels.

h. Maximum span 24 inches where ¾-inch wood finish flooring is installed at right angles to joists.

i. Maximum span 24 inches where 1.5 inches of lightweight concrete or approved cellular concrete is placed over the subfloor.

j. Unsupported edges shall have tongue-and-groove joints or shall be supported with blocking unless minimum nominal ¼-inch thick underlayment with end and edge joints offset at least 2 inches or 1.5 inches of lightweight concrete or approved cellular concrete is placed over the subfloor, or ¾-inch wood finish flooring is installed at right angles to the supports. Allowable uniform live load at maximum span, based on deflection of $^{1}/_{360}$ of span, is 100 psf.

k. Unsupported edges shall have tongue-and-groove joints or shall be supported by blocking unless nominal ¼-inch-thick underlayment with end and edge joints offset at least 2 inches or ¾-inch wood finish flooring is installed at right angles to the supports. Allowable uniform live load at maximum span, based on deflection of $^{1}/_{360}$ of span, is 100 psf, except panels with a span rating of 48 on center are limited to 65 psf total uniform load at maximum span.

l. Allowable live load values at spans of 16" o.c. and 24" o.c taken from reference standard APA E30, APA Engineered Wood Construction Guide. Refer to reference standard for allowable spans not listed in the table.

TABLE 503.2.1.1(2)
ALLOWABLE SPANS FOR SANDED PLYWOOD COMBINATION SUBFLOOR UNDERLAYMENT[a]

IDENTIFICATION	SPACING OF JOISTS (inches)		
	16	**20**	**24**
Species group[b]	—	—	—
1	½	$^{5}/_{8}$	¾
2, 3	$^{5}/_{8}$	¾	$^{7}/_{8}$
4	¾	$^{7}/_{8}$	1

For SI: 1 inch = 25.4 mm, 1 pound per square foot = 0.0479 kPa.

a. Plywood continuous over two or more spans and face grain perpendicular to supports. Unsupported edges shall be tongue-and-groove or blocked except where nominal ¼-inch-thick underlayment or ¾-inch wood finish floor is used. Allowable uniform live load at maximum span based on deflection of $^{1}/_{360}$ of span is 100 psf.
b. Applicable to all grades of sanded exterior-type plywood.

503.2.2 Allowable spans. The maximum allowable span for wood structural panels used as subfloor or combination subfloor underlayment shall be as set forth in Table 503.2.1.1(1), or APA E30. The maximum span for sanded plywood combination subfloor underlayment shall be as set forth in Table 503.2.1.1(2).

503.2.3 Installation. Wood structural panels used as subfloor or combination subfloor underlayment shall be attached to wood framing in accordance with Table 602.3(1) and shall be attached to cold-formed steel framing in accordance with Table 505.3.1(2).

503.3 Particleboard.

503.3.1 Identification and grade. Particleboard shall conform to ANSI A208.1 and shall be so identified by a grade mark or certificate of inspection issued by an approved agency.

503.3.2 Floor underlayment. Particleboard floor underlayment shall conform to Type PBU and shall not be less than ¼ inch (6.4 mm) in thickness.

503.3.3 Installation. Particleboard underlayment shall be installed in accordance with the recommendations of the manufacturer and attached to framing in accordance with Table 602.3(1).

SECTION 504
PRESSURE PRESERVATIVELY TREATED-WOOD FLOORS (ON GROUND)

504.1 General. Pressure preservatively treated-wood basement floors and floors on ground shall be designed to withstand axial forces and bending moments resulting from lateral soil pressures at the base of the exterior walls and floor live and dead loads. Floor framing shall be designed to meet joist deflection requirements in accordance with Section 301.

504.1.1 Unbalanced soil loads. Unless special provision is made to resist sliding caused by unbalanced lateral soil loads, wood basement floors shall be limited to applications where the differential depth of fill on opposite exterior foundation walls is 2 feet (610 mm) or less.

504.1.2 Construction. Joists in wood basement floors shall bear tightly against the narrow face of studs in the foundation wall or directly against a band joist that bears on the studs. Plywood subfloor shall be continuous over lapped joists or over butt joints between in-line joists. Sufficient blocking shall be provided between joists to transfer lateral forces at the base of the end walls into the floor system.

504.1.3 Uplift and buckling. Where required, resistance to uplift or restraint against buckling shall be provided by interior bearing walls or properly designed stub walls anchored in the supporting soil below.

504.2 Site preparation. The area within the foundation walls shall have all vegetation, topsoil and foreign material removed, and any fill material that is added shall be free of vegetation and foreign material. The fill shall be compacted to assure uniform support of the pressure preservatively treated-wood floor sleepers.

504.2.1 Base. A minimum 4-inch-thick (102 mm) granular base of gravel having a maximum size of ¾ inch (19.1 mm) or crushed stone having a maximum size of ½ inch (12.7 mm) shall be placed over the compacted earth.

504.2.2 Moisture barrier. Polyethylene sheeting of minimum 6-mil (0.15 mm) thickness shall be placed over the granular base. Joints shall be lapped 6 inches (152 mm) and left unsealed. The polyethylene membrane shall be placed over the pressure preservatively treated-wood sleepers and shall not extend beneath the footing plates of the exterior walls.

504.3 Materials. All framing materials, including sleepers, joists, blocking and plywood subflooring, shall be pressure-preservative treated and dried after treatment in accordance with AWPA U1 (Commodity Specification A, Use Category 4B and section 5.2), and shall bear the label of an *approved* agency.

SECTION 505
STEEL FLOOR FRAMING

505.1 Cold-formed steel floor framing. Elements shall be straight and free of any defects that would significantly affect structural performance. Cold-formed steel floor framing members shall comply with the requirements of this section.

505.1.1 Applicability limits. The provisions of this section shall control the construction of cold-formed steel floor framing for buildings not greater than 60 feet (18 288 mm) in length perpendicular to the joist span, not greater than 40 feet (12 192 mm) in width parallel to the joist span, and less than or equal to three stories above grade plane. Cold-formed steel floor framing constructed in accordance with the provisions of this section shall be limited to sites subjected to a maximum design wind speed of 110 miles per hour (49 m/s), Exposure B or C, and a maximum ground snow load of 70 pounds per square foot (3.35 kPa).

505.1.2 In-line framing. When supported by cold-formed steel framed walls in accordance with Section 603, cold-formed steel floor framing shall be constructed with floor joists located in-line with load-bearing studs located below the joists in accordance with Figure 505.1.2 and the tolerances specified as follows:

1. The maximum tolerance shall be ¾ inch (19.1 mm) between the centerline of the horizontal framing member and the centerline of the vertical framing member.

2. Where the centerline of the horizontal framing member and bearing stiffener are located to one side of the centerline of the vertical framing member, the maximum tolerance shall be $^{1}/_{8}$ inch (3 mm) between the web of the horizontal framing member and the edge of the vertical framing member.

505.1.3 Floor trusses. Cold-formed steel trusses shall be designed, braced and installed in accordance with AISI S100, Section D4. Truss members shall not be notched, cut or altered in any manner without an approved design.

505.2 Structural framing. Load-bearing cold-formed steel floor framing members shall comply with Figure 505.2(1) and with the dimensional and minimum thickness requirements specified in Tables 505.2(1) and 505.2(2). Tracks shall comply with Figure 505.2(2) and shall have a minimum flange width of 1¼ inches (32 mm). The maximum inside bend radius for members shall be the greater of $^{3}/_{32}$ inch (2.4 mm) minus half the base steel thickness or 1.5 times the base steel thickness.

505.2.1 Material. Load-bearing cold-formed steel framing members shall be cold-formed to shape from structural quality sheet steel complying with the requirements of one of the following:

1. ASTM A 653: Grades 33 and 50 (Class 1 and 3).

2. ASTM A 792: Grades 33 and 50A.

3. ASTM A 1003: Structural Grades 33 Type H and 50 Type H.

505.2.2 Identification. Load-bearing cold-formed steel framing members shall have a legible label, stencil, stamp or embossment with the following information as a minimum:

1. Manufacturer's identification.

2. Minimum base steel thickness in inches (mm).

3. Minimum coating designation.

4. Minimum yield strength, in kips per square inch (ksi) (MPa).

505.2.3 Corrosion protection. Load-bearing cold-formed steel framing shall have a metallic coating complying with ASTM A 1003 and one of the following:

1. A minimum of G 60 in accordance with ASTM A 653.

2. A minimum of AZ 50 in accordance with ASTM A 792.

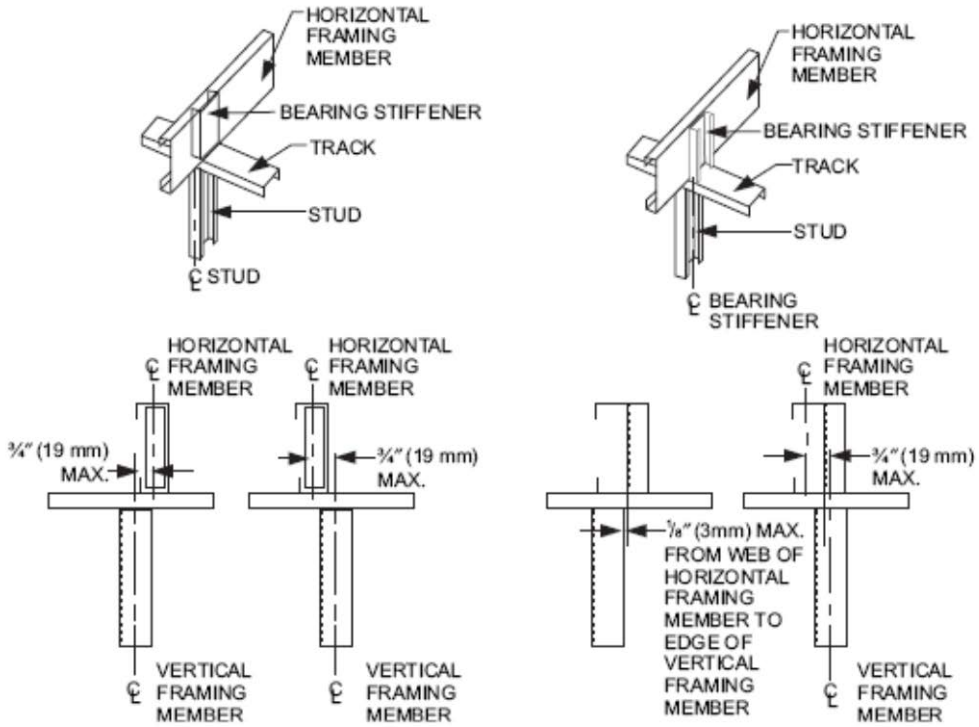

For SI: 1 inch = 25.4 mm.

FIGURE 505.1.2
IN-LINE FRAMING

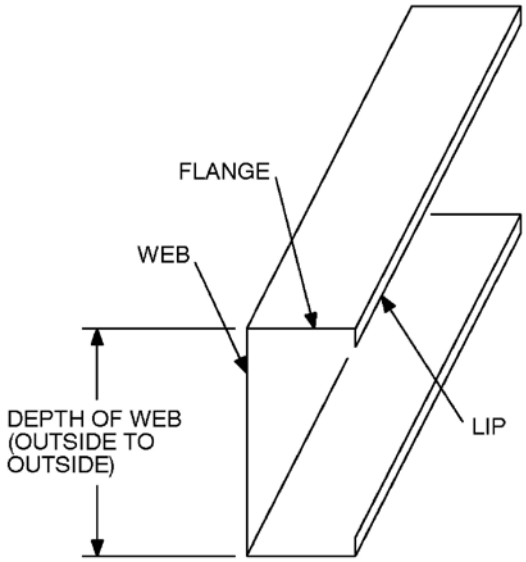

FIGURE 505.2(1) C-SHAPED SECTION

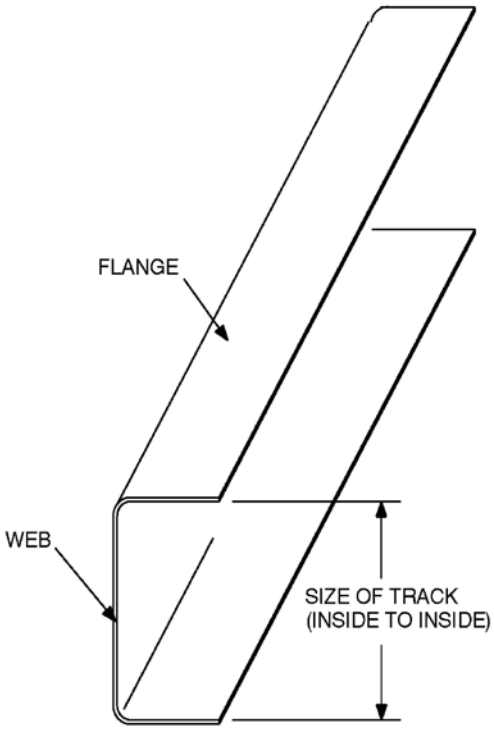

FIGURE 505.2(2) TRACK SECTION

TABLE 505.2(1)
COLD-FORMED STEEL JOIST SIZES

MEMBER DESIGNATION[a]	WEB DEPTH (inches)	MINIMUM FLANGE WIDTH (inches)	MAXIMUM FLANGE WIDTH (inches)	MINIMUM LIP SIZE (inches)
550S162-t	5.5	1.625	2	0.5
800S162-t	8	1.625	2	0.5
1000S162-t	10	1.625	2	0.5
1200S162-t	12	1.625	2	0.5

For SI: 1 inch = 25.4 mm, 1 mil = 0.0254 mm.

a. The member designation is defined by the first number representing the member depth in 0.01 inch, the letter "S" representing a stud or joist member, the second number representing the flange width in 0.01 inch, and the letter "t" shall be a number representing the minimum base metal thickness in mils [See Table 505.2(2)].

TABLE 505.2(2)
MINIMUM THICKNESS OF COLD-FORMED STEEL MEMBERS

DESIGNATION THICKNESS (mils)	MINIMUM BASE STEEL THICKNESS (inches)
33	0.0329

43	0.0428
54	0.0538
68	0.0677
97	0.0966

For SI: 1 inch = 25.4 mm, 1 mil = 0.0254 mm.

505.2.4 Fastening requirements. Screws for steel-to-steel connections shall be installed with a minimum edge distance and center-to-center spacing of ½ inch (12.7 mm), shall be self-drilling tapping, and shall conform to ASTM C 1513. Floor sheathing shall be attached to cold-formed steel joists with minimum No. 8 self-drilling tapping screws that conform to ASTM C 1513. Screws attaching floor-sheathing to cold-formed steel joists shall have a minimum head diameter of 0.292 inch (7.4 mm) with countersunk heads and shall be installed with a minimum edge distance of $^{3}/_{8}$ inch (9.5 mm). Gypsum board ceilings shall be attached to cold-formed steel joists with minimum No. 6 screws conforming to ASTM C 954 or ASTM C 1513 with a bugle head style and shall be installed in accordance with Section 702. For all connections, screws shall extend through the steel a minimum of three exposed threads. All fasteners shall have rust inhibitive coating suitable for the installation in which they are being used, or be manufactured from material not susceptible to corrosion.

Where No. 8 screws are specified in a steel-to-steel connection, the required number of screws in the connection is permitted to be reduced in accordance with the reduction factors in Table 505.2.4 when larger screws are used or when one of the sheets of steel being connected is thicker than 33 mils (0.84 mm). When applying the reduction factor, the resulting number of screws shall be rounded up.

TABLE 505.2.4
SCREW SUBSTITUTION FACTOR

	THINNEST CONNECTED STEEL SHEET (mils)	
SCREW SIZE	**33**	**43**
#8	1.0	0.67
#10	0.93	0.62
#12	0.86	0.56

For SI: 1 mil = 0.0254 mm.

505.2.5 Web holes, web hole reinforcing and web hole patching. Web holes, web hole reinforcing, and web hole patching shall be in accordance with this section.

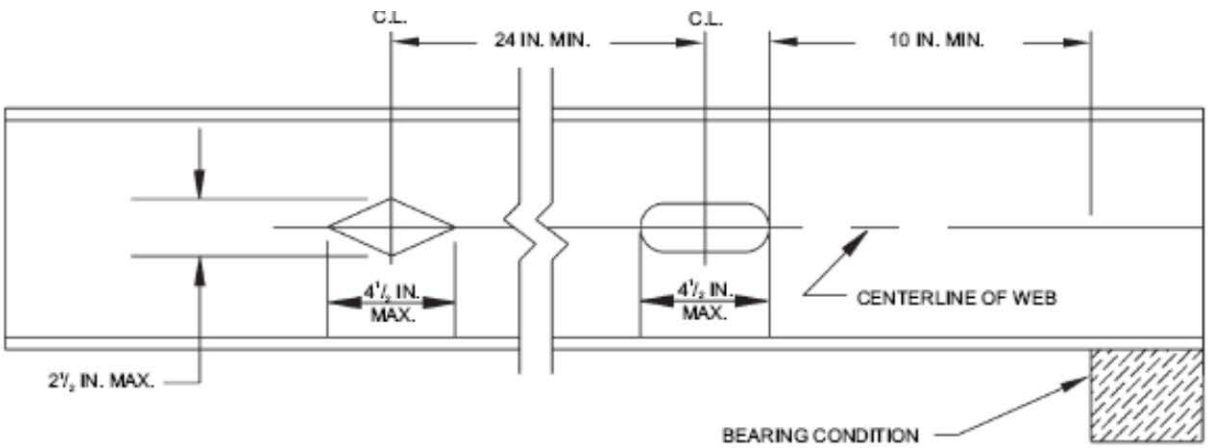

For SI: 1 inch = 25.4 mm.

FIGURE R505.2.5.1
FLOOR JOIST WEB HOLES

505.2.5.1 Web holes. Web holes in floor joists shall comply with all of the following conditions:

1. Holes shall conform to Figure 505.2.5.1;
2. Holes shall be permitted only along the centerline of the web of the framing member;

3. Holes shall have a center-to-center spacing of not less than 24 inches (610 mm);

4. Holes shall have a web hole width not greater than 0.5 times the member depth, or 2½ inches (64.5 mm);

5. Holes shall have a web hole length not exceeding 4½ inches (114 mm); and

6. Holes shall have a minimum distance between the edge of the bearing surface and the edge of the web hole of not less than 10 inches (254 mm).

Framing members with web holes not conforming to the above requirements shall be reinforced in accordance with Section 505.2.5.2, patched in accordance with Section 505.2.5.3 or designed in accordance with accepted engineering practices.

505.2.5.2 Web hole reinforcing. Reinforcement of web holes in floor joists not conforming to the requirements of Section 505.2.5.1 shall be permitted if the hole is located fully within the center 40 percent of the span and the depth and length of the hole does not exceed 65 percent of the flat width of the web. The reinforcing shall be a steel plate or C-shape section with a hole that does not exceed the web hole size limitations of Section 505.2.5.1 for the member being reinforced. The steel reinforcing shall be the same thickness as the receiving member and shall extend at least 1 inch (25.4 mm) beyond all edges of the hole. The steel reinforcing shall be fastened to the web of the receiving member with No.8 screws spaced no more than 1 inch (25.4 mm) center-to-center along the edges of the patch with minimum edge distance of ½ inch (12.7 mm).

505.2.5.3 Hole patching. Patching of web holes in floor joists not conforming to the requirements in Section 505.2.5.1 shall be permitted in accordance with either of the following methods:

1. Framing members shall be replaced or designed in accordance with accepted engineering practices where web holes exceed the following size limits:

    1.1 The depth of the hole, measured across the web, exceeds 70 percent of the flat width of the web; or

    1.2 The length of the hole measured along the web, exceeds 10 inches (254 mm) or the depth of the web, whichever is greater.

2. Web holes not exceeding the dimensional requirements in Section 505.2.5.3, Item 1, shall be patched with a solid steel plate, stud section, or track section in accordance with Figure 505.2.5.3. The steel patch shall, as a minimum, be of the same thickness as the receiving member and shall extend at least 1 inch (25 mm) beyond all edges of the hole. The steel patch shall be fastened to the web of the receiving member with No.8 screws spaced no more than 1

inch (25 mm) center-to-center along the edges of the patch with minimum edge distance of ½ inch (13 mm).

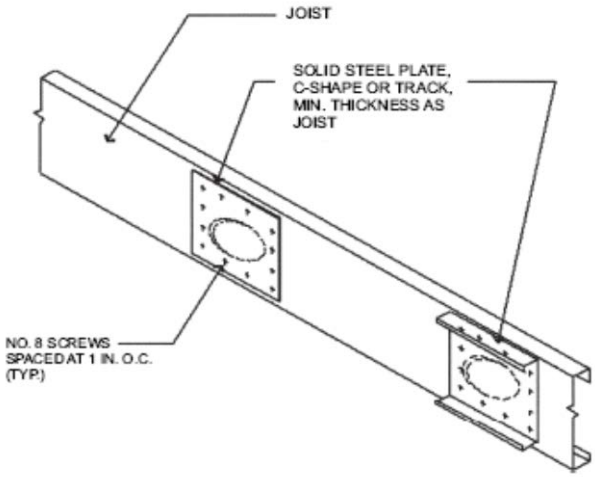

FIGURE 505.2.5.3
WEB HOLE PATCH

505.3 Floor construction. Cold-formed steel floors shall be constructed in accordance with this section.

505.3.1 Floor to foundation or load-bearing wall connections. Cold-formed steel framed floors shall be anchored to foundations, wood sills or load-bearing walls in accordance with Table 505.3.1(1) and Figure 505.3.1(1), 505.3.1(2), 505.3.1(3), 505.3.1(4), 505.3.1(5) or 505.3.1(6). Anchor bolts shall be located not more than 12 inches (305 mm) from corners or the termination of bottom tracks. Continuous cold-formed steel joists supported by interior load-bearing walls shall be constructed in accordance with Figure 505.3.1(7). Lapped cold-formed steel joists shall be constructed in accordance with Figure 505.3.1(8). End floor joists constructed on foundation walls parallel to the joist span shall be doubled unless a C-shaped bearing stiffener, sized in accordance with Section 505.3.4, is installed web-to-web with the floor joist beneath each supported wall stud, as shown in Figure 505.3.1(9). Fastening of cold-formed steel joists to other framing members shall be in accordance with Section 505.2.4 and Table 505.3.1(2).

505.3.2 Minimum floor joist sizes. Floor joist size and thickness shall be determined in accordance with the limits set forth in Table 505.3.2(1) for single spans, and Tables 505.3.2(2) and 505.3.2(3) for multiple spans. When continuous joist members are used, the interior bearing supports shall be

located within 2 feet (610 mm) of mid-span of the cold-formed steel joists, and the individual spans shall not exceed the spans in Table 505.3.2(2) or 505.3.2(3), as applicable. Floor joists shall have a bearing support length of not less than 1½ inches (38 mm) for exterior wall supports and 3½ inches (89 mm) for interior wall supports. Tracks shall be a minimum of 33 mils (0.84 mm) thick except when used as part of a floor header or trimmer in accordance with Section 505.3.8. Bearing stiffeners shall be installed in accordance with Section 505.3.4.

505.3.3 Joist bracing and blocking. Joist bracing and blocking shall be in accordance with this section.

505.3.3.1 Joist top flange bracing. The top flanges of cold-formed steel joists shall be laterally braced by the application of floor sheathing fastened to the joists in accordance with Section 505.2.4 and Table 505.3.1(2).

505.3.3.2 Joist bottom flange bracing/blocking. Floor joists with spans that exceed 12 feet (3658 mm) shall have the bottom flanges laterally braced in accordance with one of the following:

1. Gypsum board installed with minimum No. 6 screws in accordance with Section 702.

2. Continuous steel straps installed in accordance with Figure 505.3.3.2(1). Steel straps shall be spaced at a maximum of 12 feet (3658 mm) on center and shall be at least 1½ inches (38 mm) in width and 33 mils (0.84 mm) in thickness. Straps shall be fastened to the bottom flange of each joist with one No. 8 screw, fastened to blocking with two No. 8 screws, and fastened at each end (of strap) with two No. 8 screws. Blocking in accordance with Figure 505.3.3.2(1) or Figure 505.3.3.2(2) shall be installed between joists at each end of the continuous strapping and at a maximum spacing of 12 feet (3658 mm) measured along the continuous strapping (perpendicular to the joist run). Blocking shall also be located at the termination of all straps. As an alternative to blocking at the ends, anchoring the strap to a stable building component with two No. 8 screws shall be permitted.

TABLE 505.3.1(1)
FLOOR TO FOUNDATION OR BEARING WALL CONNECTION REQUIREMENTS[a, b]

FRAMING CONDITION	BASIC WIND SPEED (mph) AND EXPOSURE	
	85 mph Exposure C or less than 110 mph Exposure B	**Less than 110 mph Exposure C**
Floor joist to wall track of exterior wall per Figure 505.3.1(1)	2-No. 8 screws	3-No. 8 screws
Rim track or end joist to load-bearing wall top track per Figure 505.3.1(1)	1-No. 8 screw at 24 inches o.c.	1-No. 8 screw at 24 inches o.c.
Rim track or end joist to wood sill per Figure 505.3.1(2)	Steel plate spaced at 4 feet o.c. with 4-No. 8 screws and 4-10d or 6-8d common nails	Steel plate spaced at 2 feet o.c. with 4-No. 8 screws and 4-10d or 6-8d common nails
Rim track or end joist to foundation per Figure 505.3.1(3)	½ inch minimum diameter anchor bolt and clip angle spaced at 6 feet o.c. with 8-No. 8 screws	½ inch minimum diameter anchor bolt and clip angle spaced at 4 feet o.c. with 8-No. 8 screws
Cantilevered joist to foundation per Figure R505.3.1(4)	½ inch minimum diameter anchor bolt and clip angle spaced at 6 feet o.c. with 8-No. 8 screws	½ inch minimum diameter anchor bolt and clip angle spaced at 4 feet o.c. with 8-No. 8 screws
Cantilevered joist to wood sill per Figure 505.3.1(5)	Steel plate spaced at 4 feet o.c. with 4-No. 8 screws and 4-10d or 6-8d common nails	Steel plate spaced at 2 feet o.c. with 4-No. 8 screws and 4-10d or 6-8d common nails
Cantilevered joist to exterior load-bearing wall track per Figure 505.3.1(6)	2-No. 8 screws	3-No. 8 screws

For SI: 1 inch = 25.4 mm, 1 pound per square foot = 0.0479kPa, 1 mile per hour = 0.447 m/s, 1 foot = 304.8 mm.

a. Anchor bolts are to be located not more than 12 inches from corners or the termination of bottom tracks (e.g., at door openings or corners). Bolts extend a minimum of 15 inches into masonry or 7 inches into concrete. Anchor bolts connecting cold-formed steel framing to the foundation structure are to be installed so that the distance from the center of the bolt hole to the edge of the connected member is not less than one and one-half bolt diameters.

b. All screw sizes shown are minimum.

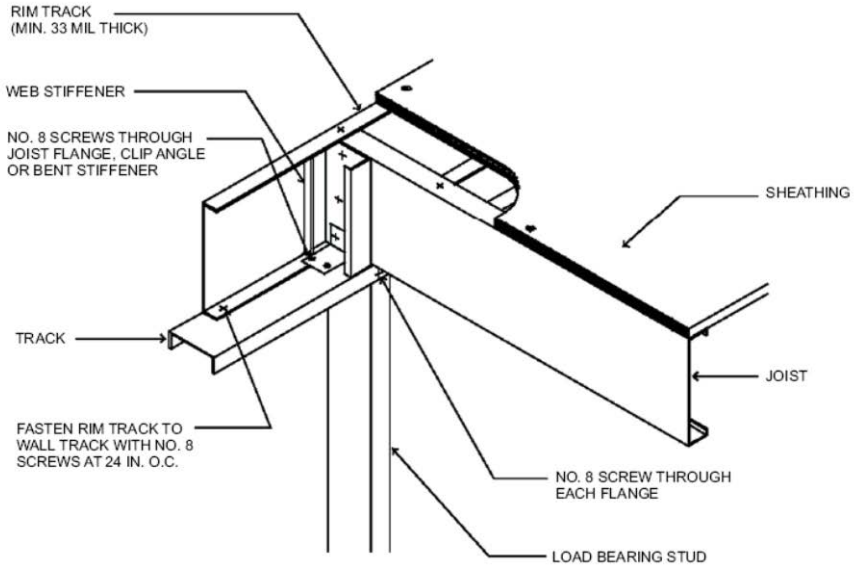

For SI: 1 mil = 0.0254 mm, 1 inch = 25.4 mm.

FIGURE 505.3.1(1)

FLOOR TO EXTERIOR LOAD-BEARING WALL STUD CONNECTION

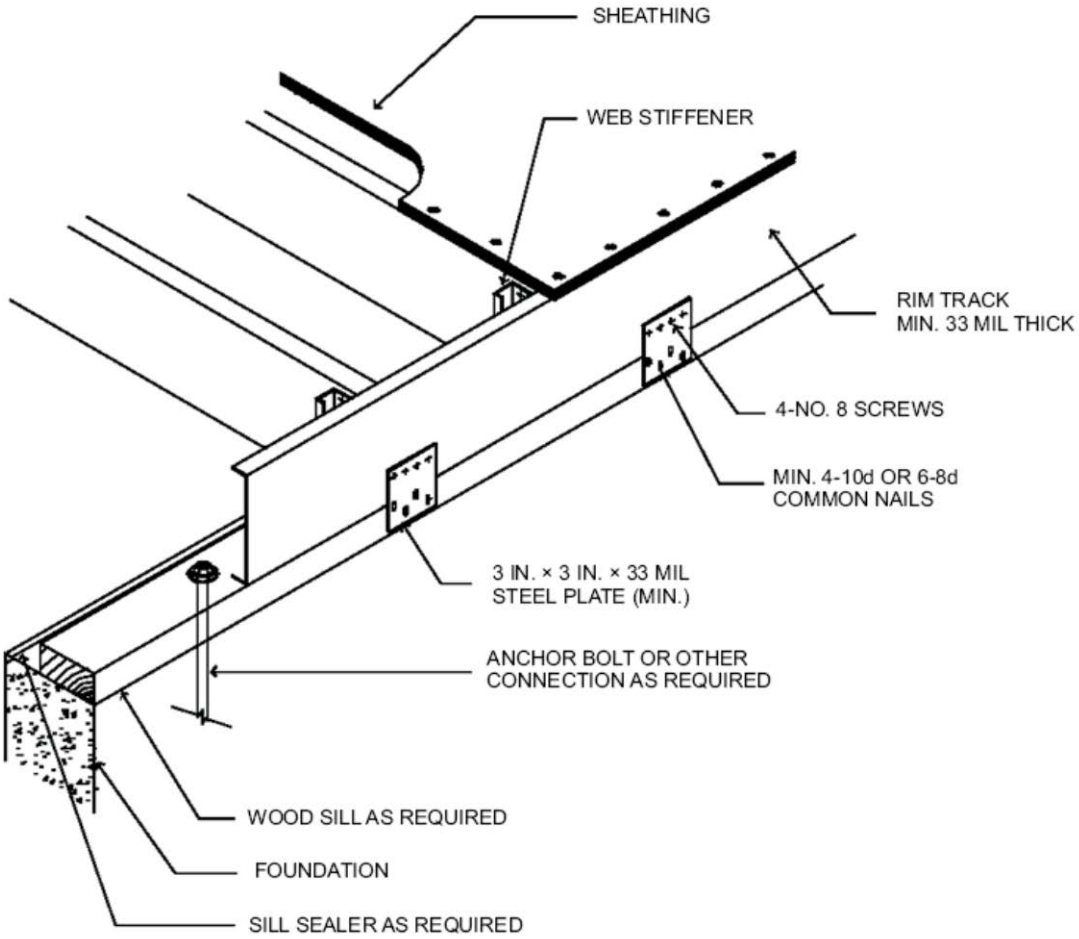

For SI: 1 mil = 0.0254 mm, 1 inch = 25.4 mm.

FIGURE 505.3.1(2)
FLOOR TO WOOD SILL CONNECTION

TABLE 505.3.1(2)
FLOOR FASTENING SCHEDULE[a]

DESCRIPTION OF BUILDING ELEMENTS	NUMBER AND SIZE OF FASTENERS	SPACING OF FASTENERS
Floor joist to track of an interior load-bearing wall per Figures 505.3.1(7) and 505.3.1(8)	2 No. 8 screws	Each joist
Floor joist to track at end of joist	2 No. 8 screws	One per flange or two per bearing stiffener
Subfloor to floor joists	No. 8 screws	6 in. o.c. on edges and 12 in. o.c. at intermediate supports

For SI: 1 inch = 25.4 mm.
a. All screw sizes shown are minimum.

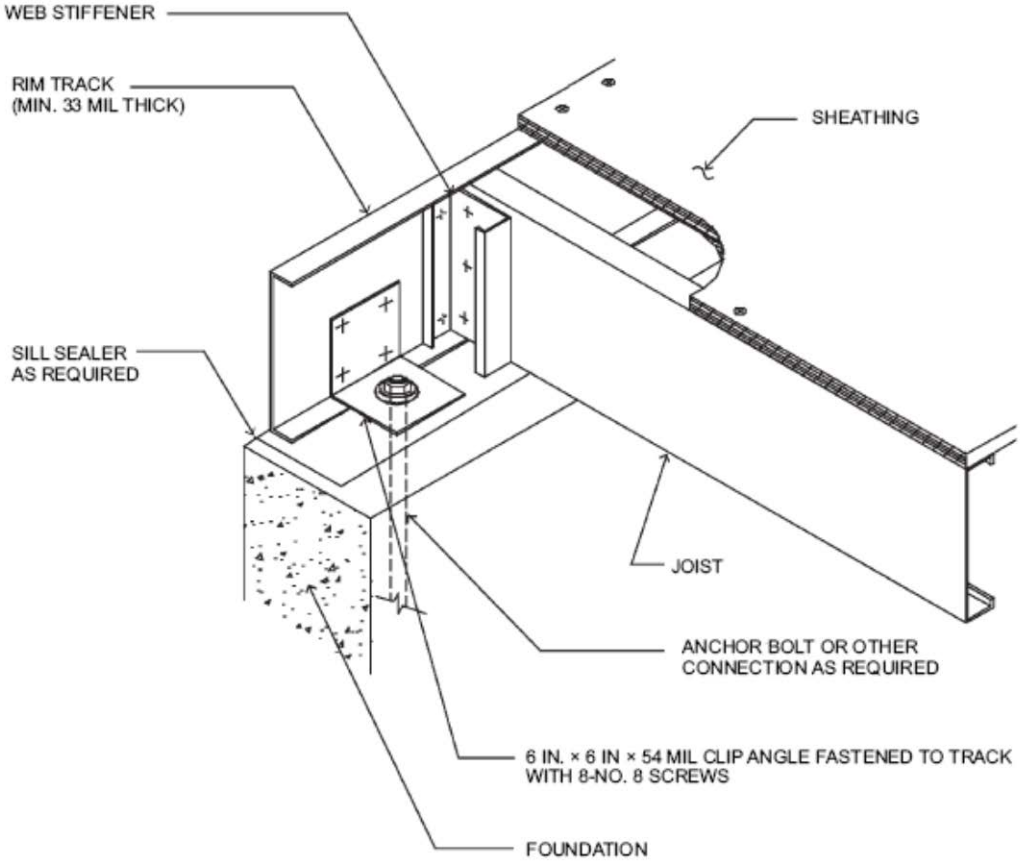

For SI: 1 mil = 0.0254 mm, 1 inch = 25.4 mm.

FIGURE 505.3.1(3)
FLOOR TO FOUNDATION CONNECTION

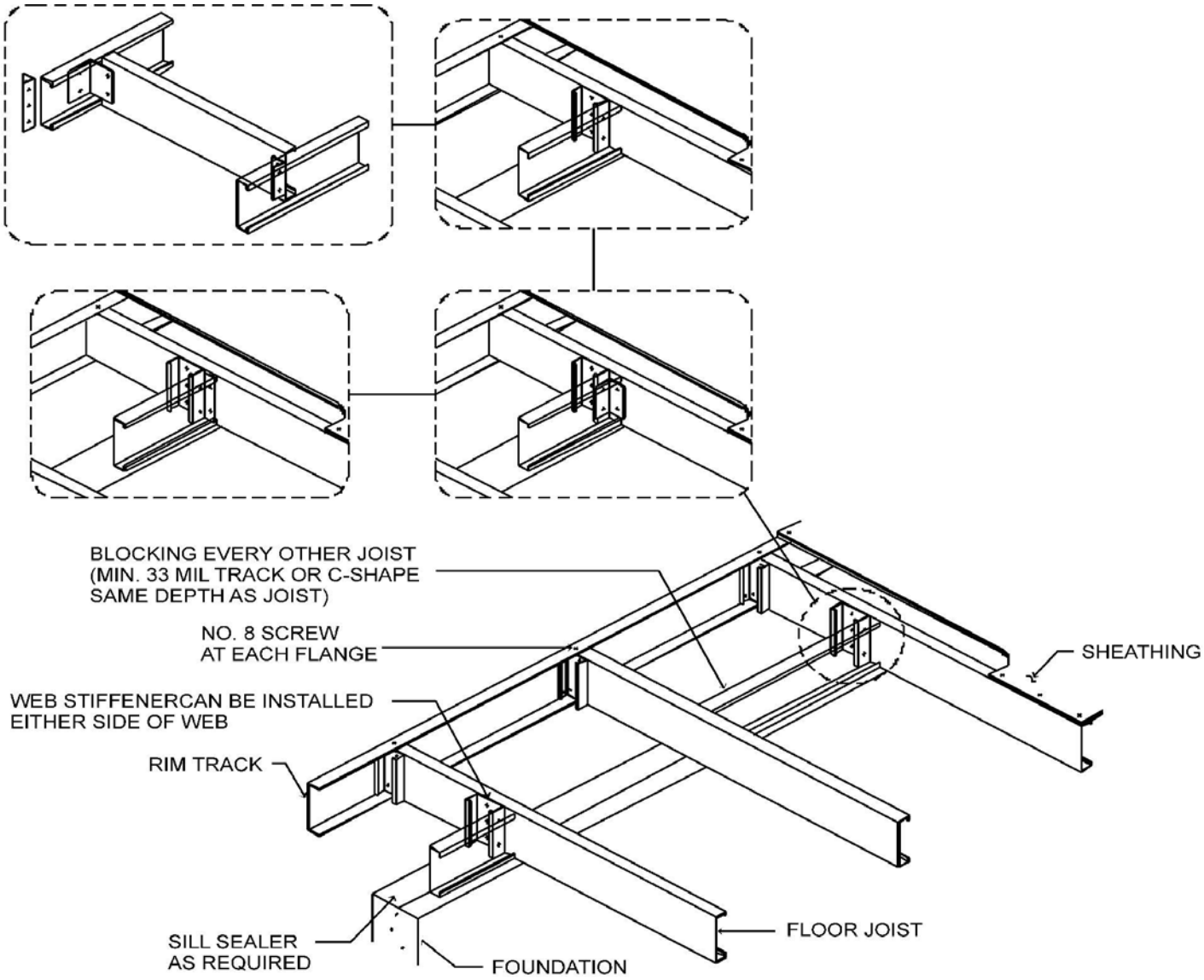

For SI: 1 mil = 0.0254 mm, 1 inch = 25.4 mm.

FIGURE 505.3.1(4)
CANTILEVERED FLOOR TO FOUNDATION CONNECTION

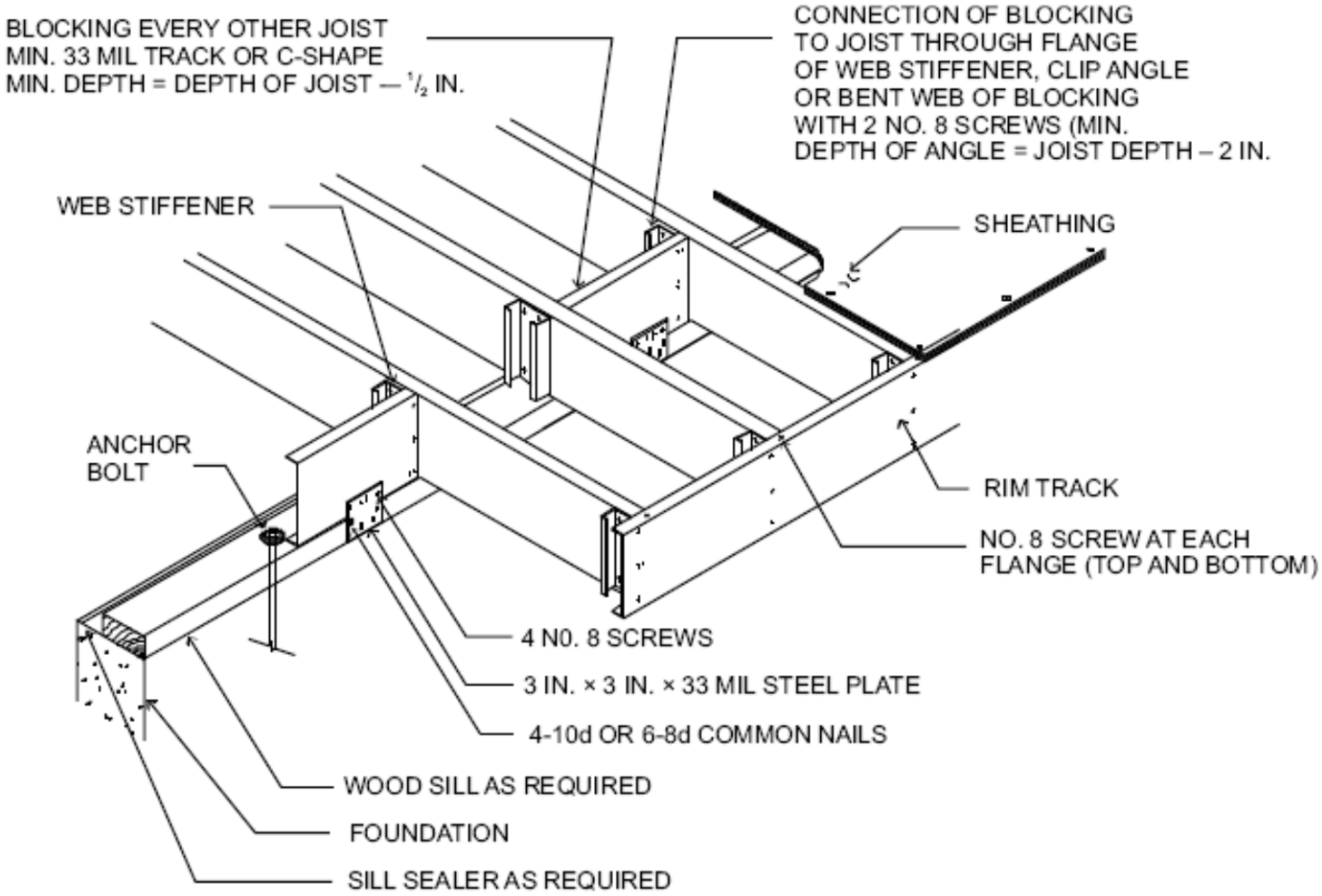

For SI: 1 mil = 0.0254 mm, 1 inch = 25.4 mm.

FIGURE 505.3.1(5)
CANTILEVERED FLOOR TO WOOD SILL CONNECTION

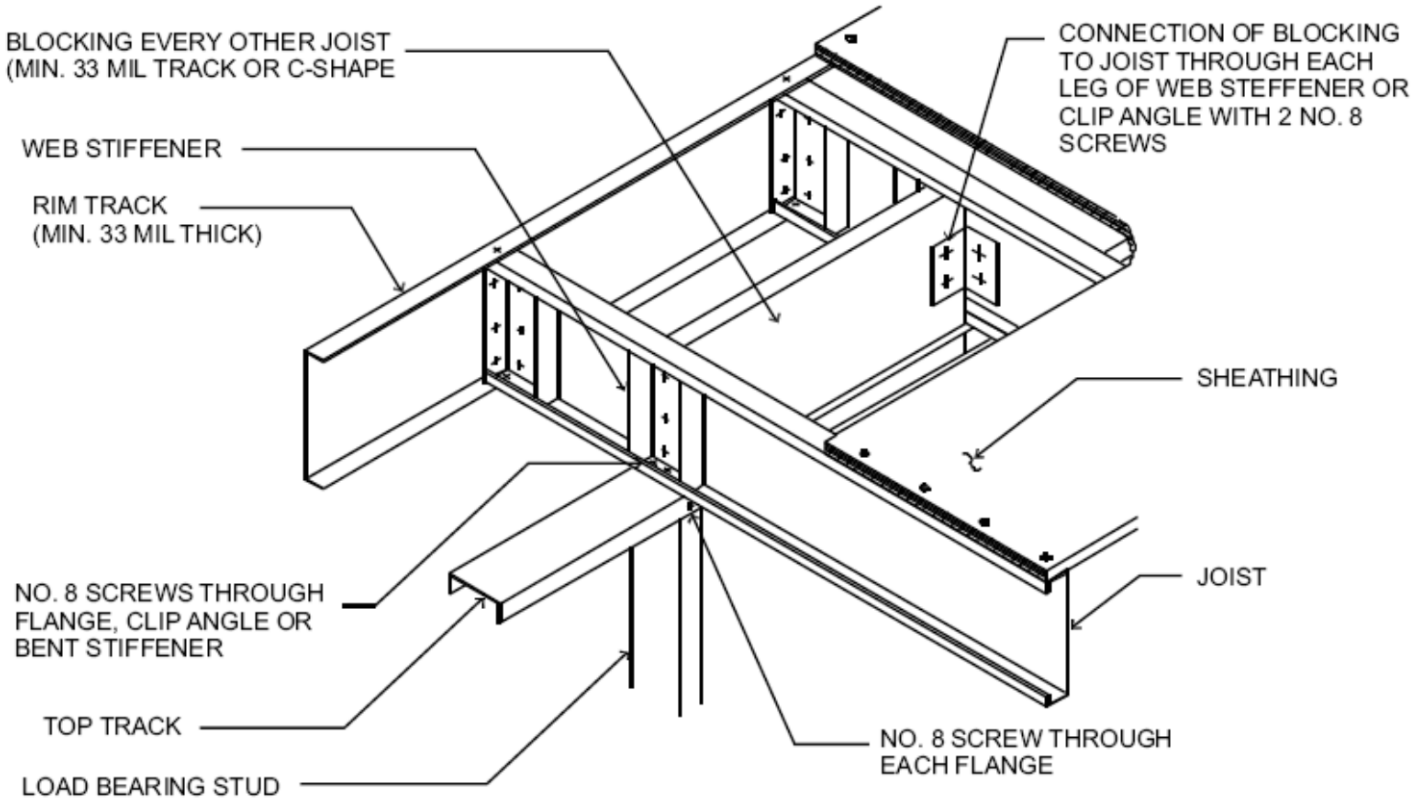

FIGURE 505.3.1(6)
CANTILEVERED FLOOR TO EXTERIOR LOAD-BEARING CONNECTION

For SI: 1 mil = 0.0254 mm, 1 inch = 25.4 mm.

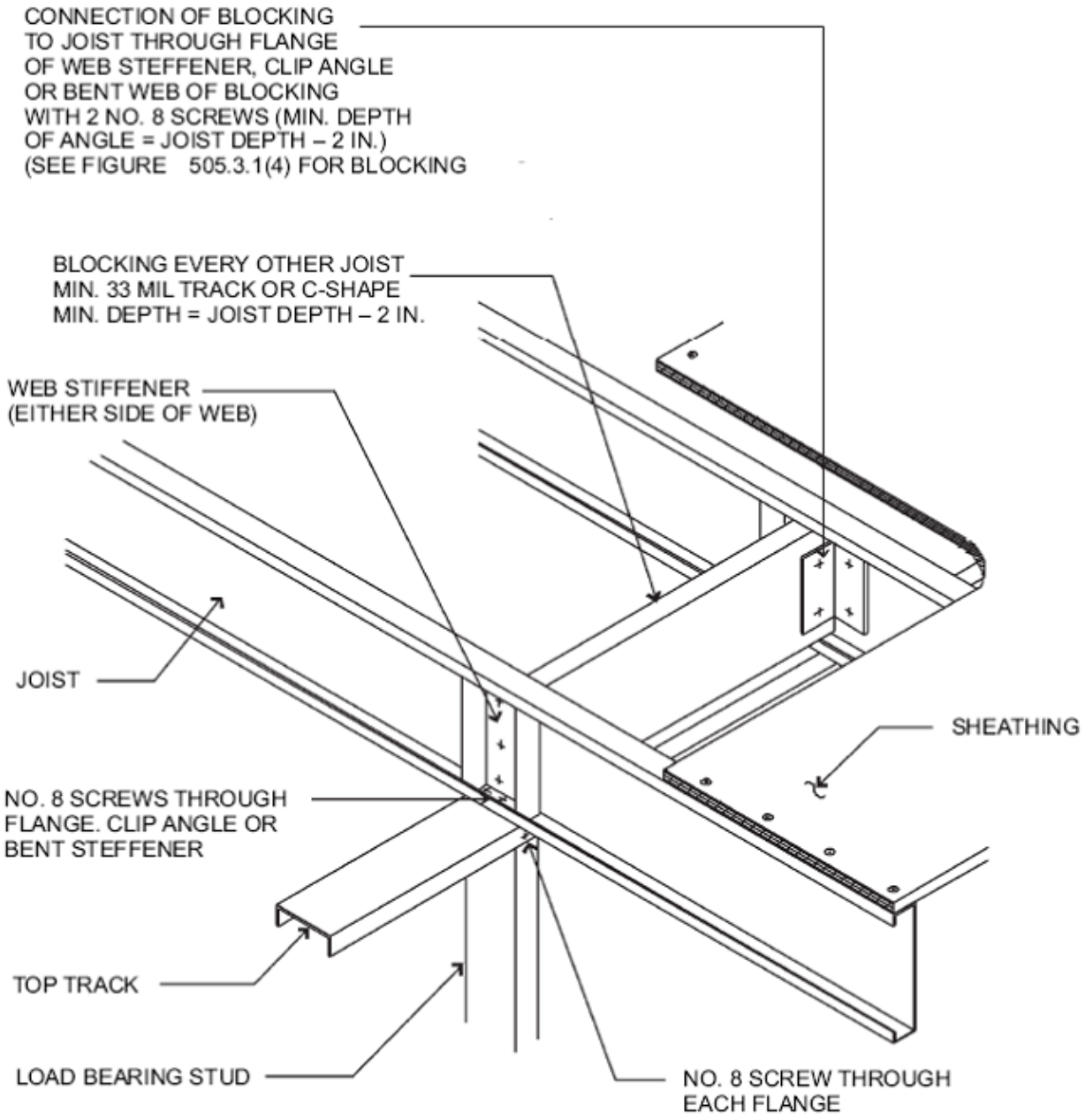

For SI: 1 mil = 0.0254 mm

FIGURE 505.3.1(7)
CONTINUOUS SPAN JOIST SUPPORTED ON INTERIOR LOAD-BEARING WALL

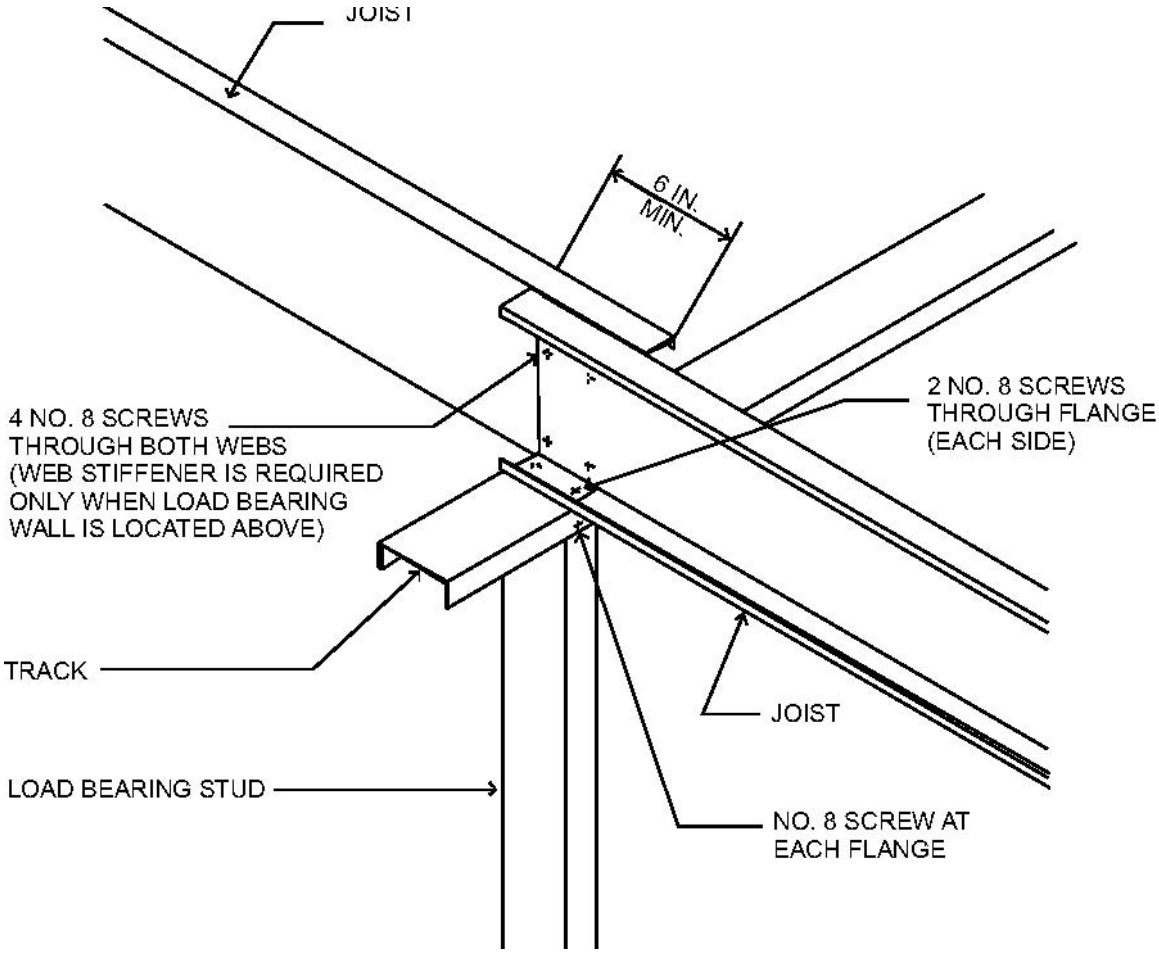

For SI: 1 inch = 25.4 mm.

FIGURE 505.3.1(8)
LAPPED JOISTS SUPPORTED ON INTERIOR LOAD-BEARING WALL

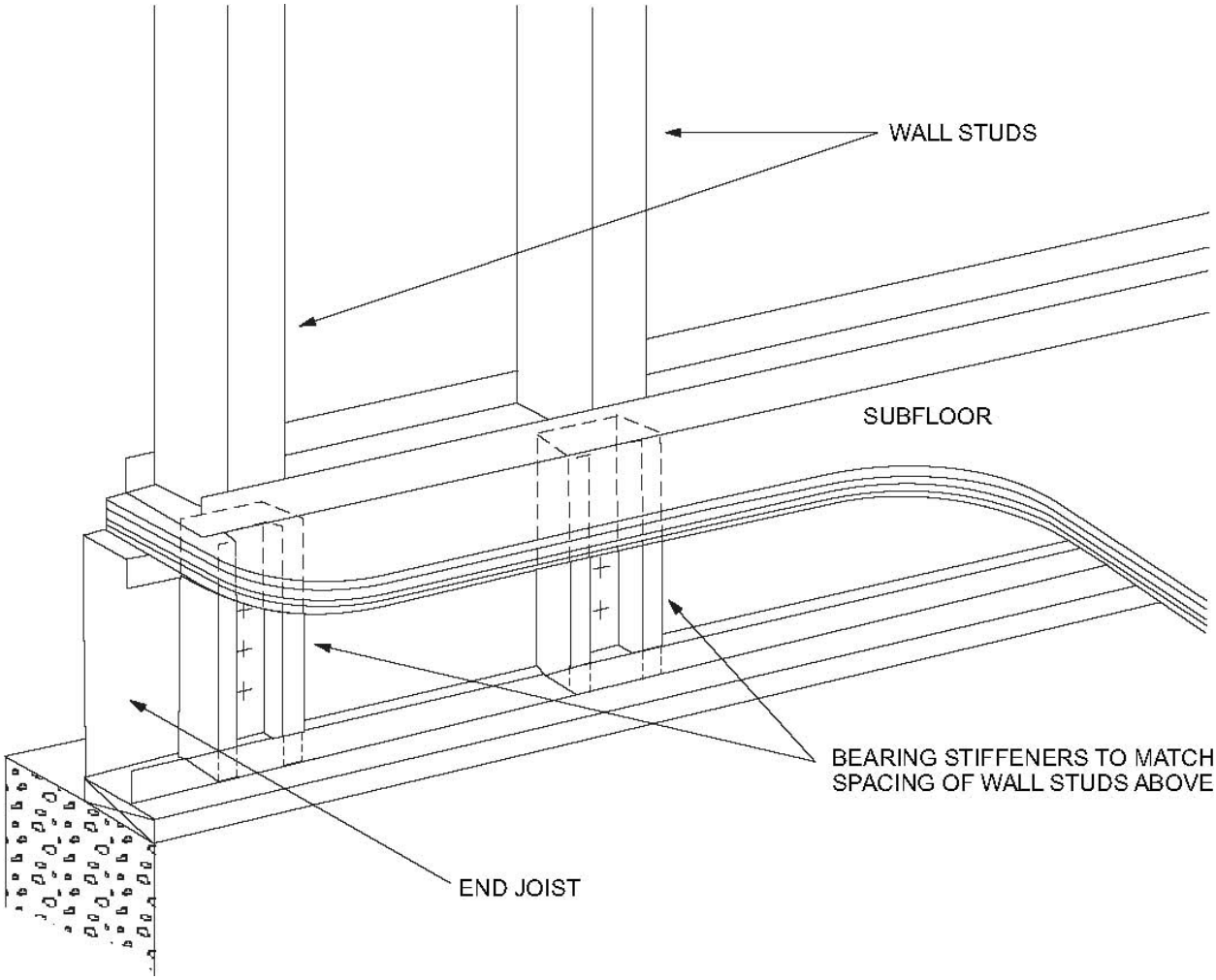

FIGURE 505.3.1(9)
BEARING STIFFENERS FOR END JOISTS

TABLE 505.3.2(1)
ALLOWABLE SPANS FOR COLD-FORMED STEEL JOISTS—SINGLE SPANS[a, b, c, d] 33 ksi STEEL

JOIST DESIGNATION	30 PSF LIVE LOAD				40 PSF LIVE LOAD			
	Spacing (inches)				Spacing (inches)			
	12	16	19.2	24	12	16	19.2	24
550S162-33	11′-7″	10′-7″	9′-6″	8′-6″	10′-7″	9′-3″	8′-6″	7′-6″
550S162-43	12′-8″	11′-6″	10′-10″	10′-2″	11′-6″	10′-5″	9′-10″	9′-1″
550S162-54	13′-7″	12′-4″	11′-7″	10′-9″	12′-4″	11′-2″	10′-6″	9′-9″
550S162-68	14′-7″	13′-3″	12′-6″	11′-7″	13′-3″	12′-0″	11′-4″	10′-6″
550S162-97	16′-2″	14′-9″	13′-10″	12′-10″	14′-9″	13′-4″	12′-7″	11′-8″

800S162-33	15′-8″	13′-11″	12′-9″	11′-5″	14′-3″	12′-5″	11′-3″	9′-0″
800S162-43	17′-1″	15′-6″	14′-7″	13′-7″	15′-6″	14′-1″	13′-3″	12′-4″
800S162-54	18′-4″	16′-8″	15′-8″	14′-7″	16′-8″	15′-2″	14′-3″	13′-3″
800S162-68	19′-9″	17′-11″	16′-10″	15′-8″	17′-11″	16′-3″	15′-4″	14′-2″
800S162-97	22′-0″	20′-0″	16′-10″	17′-5″	20′-0″	18′-2″	17′-1″	15′-10″
1000S162-43	20′-6″	18′-8″	17′-6″	15′-8″	18′-8″	16′-11″	15′-6″	13′-11″
1000S162-54	22′-1″	20′-0″	18′-10″	17′-6″	20′-0″	18′-2″	17′-2″	15′-11″
1000S162-68	23′- 9″	21′-7″	20′-3″	18′-10″	21′-7″	19′-7″	18′-5″	17′-1″
1000S162-97	26′-6″	24′-1″	22′-8″	21′-0″	24′-1″	21′-10″	20′-7″	19′-1″
1200S162-43	23′-9″	20′-10″	19′-0″	16′-8″	21′-5″	18′-6″	16′-6″	13′-2″
1200S162-54	25′-9″	23′-4″	22′-0″	20′-1″	23′-4″	21′-3″	20′-0″	17′-10″
1200S162-68	27′-8″	25′-1″	23′-8″	21′-11″	25′-1″	22′-10″	21′-6″	21′-1″
1200S162-97	30′-11″	28′-1″	26′-5″	24′-6″	28′-1″	25′-6″	24′-0″	22′-3″

For SI: 1 inch = 25.4 mm, 1 foot = 304.8 mm, 1 pound per square foot = 0.0479kPa.

a. Deflection criteria: *L*/480 for live loads, *L*/240 for total loads.

b. Floor dead load = 10 psf.

c. Table provides the maximum clear span in feet and inches.

d. Bearing stiffeners are to be installed at all support points and concentrated loads.

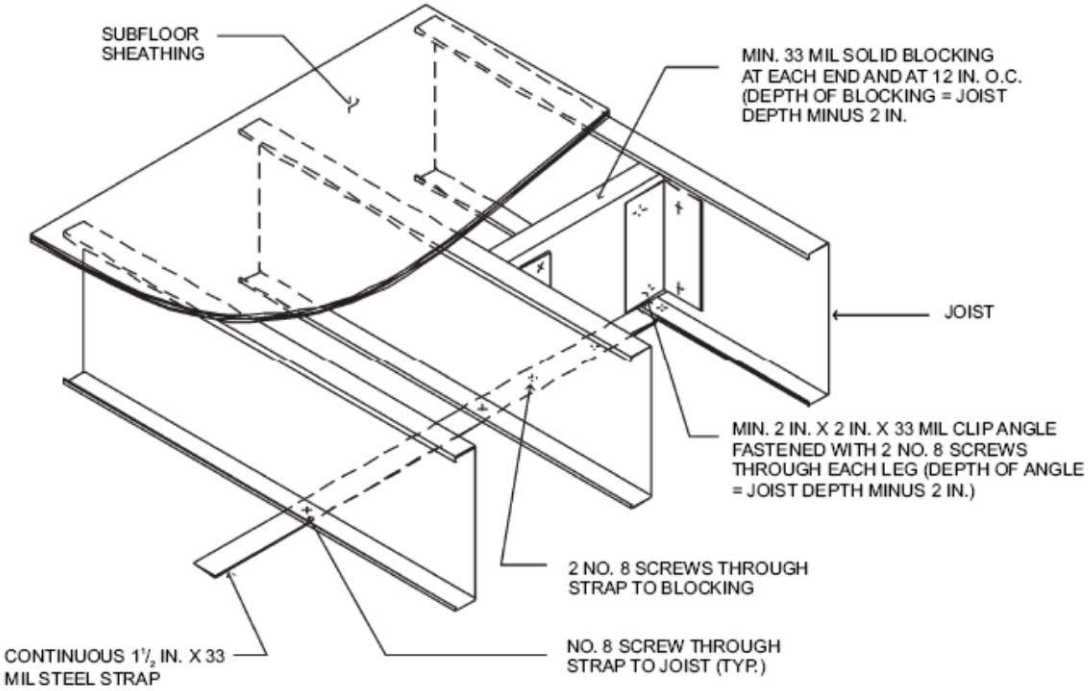

For SI: 1 mil = 0.0254 mm, 1 inch = 25.4 mm.

FIGURE 505.3.3.2(1)
JOIST BLOCKING (SOLID)

TABLE 505.3.2(2)
ALLOWABLE SPANS FOR COLD-FORMED STEEL JOISTS—MULTIPLE SPANS[a, b, c, d, e, f] 33 ksi STEEL

JOIST DESIGNATION	30 PSF LIVE LOAD				40 PSF LIVE LOAD			
	Spacing (inches)				Spacing (inches)			
	12	16	19.2	24	12	16	19.2	24
550S162-33	12′-1″	10′-5″	9′-6″	8′-6″	10′-9″	9′-3″	8′-6″	7′-6″
550S162-43	14′-5″	12′-5″	11′-4″	10′-2″	12′-9″	11′-11″	10′-1″	9′-0″
550S162-54	16′-3″	14′-1″	12′-10″	11′-6″	14′-5″	12′-6″	11′-5″	10′-2″
550S162-68	19′-7″	17′-9″	16′-9″	15′-6″	17′-9″	16′-2″	15′-2″	14′-1″
550S162-97	21′-9″	19′-9″	18′-7″	17′-3″	19′-9″	17′-11″	16′-10″	15′-4″
800S162-33	14′-8″	11′-10″	10′-4″	8′-8″	12′-4″	9′-11″	8′-7″	7′-2″
800S162-43	20′-0″	17′-4″	15′-9″	14′-1″	17′-9″	15′-4″	14′-0″	12′-0″
800S162-54	23′-7″	20′-5″	18′-8″	16′-8″	21′-0″	18′-2″	16′-7″	14′-10″
800S162-68	26′-5″	23′-1″	21′-0″	18′-10″	23′-8″	20′-6″	18′-8″	16′-9″
800S162-97	29′-6″	26′-10″	25′-3″	22′-8″	26′-10″	24′-4″	22′-6″	20′-2″
1000S162-43	22′-2″	18′-3″	16′-0″	13′-7″	18′-11″	15′-5″	13′-6″	11′-5″
1000S162-54	26′-2″	22′-8″	20′-8″	18′-6″	23′-3″	20′-2″	18′-5″	16′-5″
1000S162-68	31′- 5″	27′-2″	24′-10″	22′-2″	27′-11″	24′-2″	22′-1″	19′-9″
1000S162-97	35′-6″	32′-3″	29′-11″	26′-9″	32′-3″	29′-2″	26′-7″	23′-9″
1200S162-43	21′-8″	17′-6″	15′-3″	12′-10″	18′-3″	14′-8″	12′-8″	10′-6[2]
1200S162-54	28′-5″	24′-8″	22′-6″	19′-6″	25′-3″	21′-11″	19′-4″	16′-6″
1200S162-68	33′-7″	29′-1″	26′-6″	23′-9″	29′-10″	25′-10″	23′-7″	21′-1″
1200S162-97	41′-5″	37′-8″	34′-6″	30′-10″	37′-8″	33′-6″	30′-7″	27′-5″

For SI: 1 inch = 25.4 mm, 1 foot = 304.8 mm, 1 pound per square foot = 0.0479kPa.

a. Deflection criteria: *L*/480 for live loads, *L*/240 for total loads.

b. Floor dead load = 10 psf.

c. Table provides the maximum clear span in feet and inches to either side of the interior support.

d. Interior bearing supports for multiple span joists consist of structural (bearing) walls or beams.

e. Bearing stiffeners are to be installed at all support points and concentrated loads.

f. Interior supports shall be located within 2 feet of mid-span provided that each of the resulting spans does not exceed the appropriate maximum span shown in the table above.

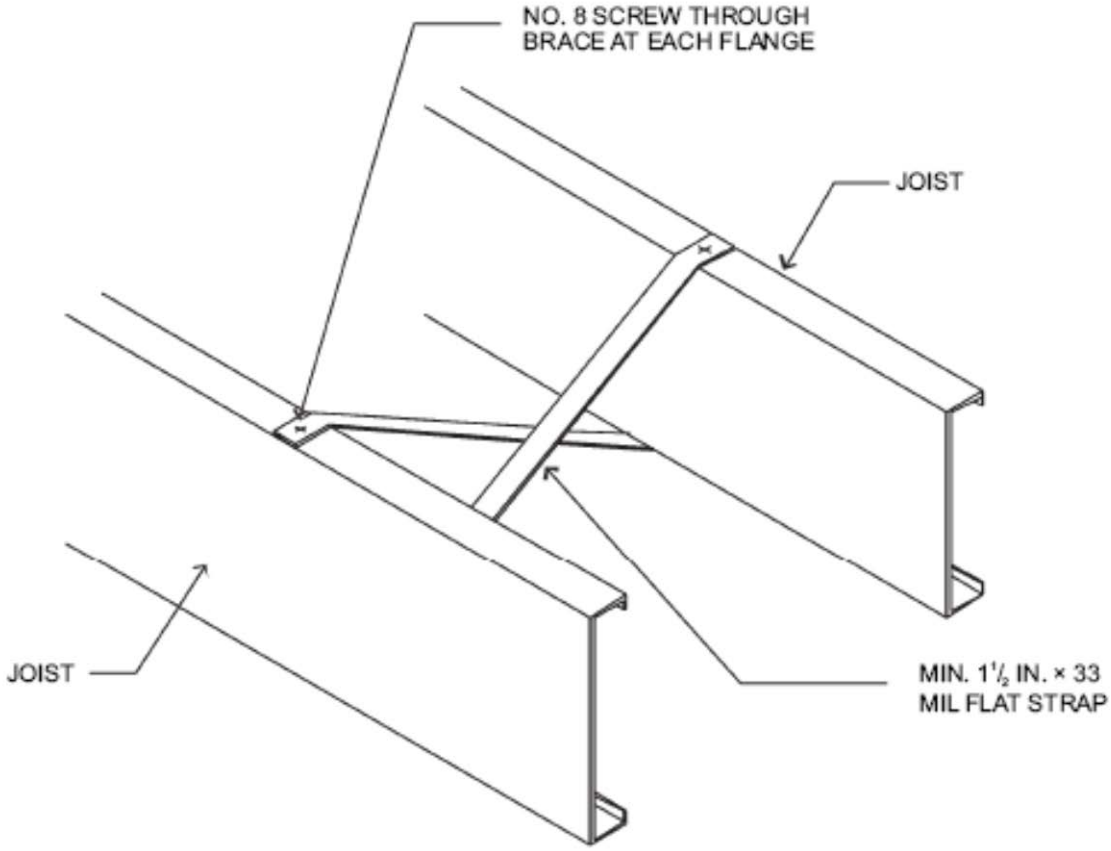

For SI: 1 mil = 0.0254 = 25.4 mm.

FIGURE 505.3.3.2(2)
JOIST BLOCKING (STRAP)

TABLE 505.3.2(3)
ALLOWABLE SPANS FOR COLD-FORMED STEEL JOISTS—MULTIPLE SPANS[a, b, c, d, e, f] 50 ksi STEEL

JOIST DESIGNATION	30 PSF LIVE LOAD				40 PSF LIVE LOAD			
	Spacing (inches)				Spacing (inches)			
	12	16	19.2	24	12	16	19.2	24
550S162-33	13′-11″	12′-0″	11′-0″	9′-3″	12′-3″	10′-8″	9′-7″	8′-4″
550S162-43	16′-3″	14′-1″	12′-10″	11′-6″	14′-6″	12′-6″	11′-5″	10′-3″
550S162-54	18′-2″	16′-6″	15′-4″	13′-8″	16′-6″	14′-11″	13′-7″	12′-2″
550S162-68	19′-6″	17′-9″	16′-8″	15′-6″	17′-9″	16′-1″	15′-2″	14′-0″
550S162-97	21′-9″	19′-9″	18′-6″	17′-2″	19′-8″	17′-10″	16′-8″	15′-8″
800S162-33	15′-6″	12′-6″	10′-10″	9′-1″	13′-0″	10′-5″	8′-11″	6′-9″
800S162-43	22′-0″	19′-1″	17′-5″	15′-0″	19′-7″	16′-11″	14′-10″	12′-8″
800S162-54	24′-6″	22′-4″	20′-6″	17′-11″	22′-5″	19′-9″	17′-11″	15′-10″

800S162-68	26′-6″	24′-1″	22′-8″	21′-0″	24′-1″	21′-10″	20′-7″	19′-2″
800S162-97	29′-9″	26′-8″	25′-2″	23′-5″	26′-8″	24′-3″	22′-11″	21′-4″
1000S162-43	23′-6″	19′-2″	16′-9″	14′-2″	19′-11″	16′-2″	14′-0″	11′-9″
1000S162-54	28′-2″	23′-10″	21′-7″	18′-11″	24′-8″	20′-11″	18′-9″	18′-4″
1000S162-68	31′- 10″	28′-11″	27′-2″	25′-3″	28′-11″	26′-3″	24′-9″	22′-9″
1000S162-97	35′-4″	32′-1″	30′-3″	28′-1″	32′-1″	29′-2″	27′-6″	25′-6″
1200S162-43	22′-11″	18′-5″	16′-0″	13′-4″	19′-2″	15′-4″	13′-2″	10′-6″
1200S162-54	32′-8″	28′-1″	24′-9″	21′-2″	29′-0″	23′-10″	20′-11″	17′-9″
1200S162-68	37′-1″	32′-5″	29′-4″	25′-10″	33′-4″	28′-6″	25′-9″	22′-7″
1200S162-97	41′-2″	37′-6″	35′-3″	32′-9″	37′-6″	34′-1″	32′-1″	29′-9″

For SI: 1 inch = 25.4 mm, 1 foot = 304.8 mm, 1 pound per square foot = 0.0479kPa.

a. Deflection criteria: *L*/480 for live loads, *L*/240 for total loads.

b. Floor dead load = 10 psf.

c. Table provides the maximum clear span in feet and inches to either side of the interior support.

d. Interior bearing supports for multiple span joists consist of structural (bearing) walls or beams.

e. Bearing stiffeners are to be installed at all support points and concentrated loads.

f. Interior supports shall be located within 2 feet of mid-span provided that each of the resulting spans does not exceed the appropriate maximum span shown in the table above.

505.3.3.3 Blocking at interior bearing supports. Blocking is not required for continuous back-to-back floor joists at bearing supports. Blocking shall be installed between every other joist for single continuous floor joists across bearing supports in accordance with Figure 505.3.1(7). Blocking shall consist of C-shape or track section with a minimum thickness of 33 mils (0.84 mm). Blocking shall be fastened to each adjacent joist through a 33-mil (0.84 mm) clip angle, bent web of blocking or flanges of web stiffeners with two No. 8 screws on each side. The minimum depth of the blocking shall be equal to the depth of the joist minus 2 inches (51 mm). The minimum length of the angle shall be equal to the depth of the joist minus 2 inches (51 mm).

505.3.3.4 Blocking at cantilevers. Blocking shall be installed between every other joist over cantilever bearing supports in accordance with Figure 505.3.1(4), 505.3.1(5) or 505.3.1(6). Blocking shall consist of C-shape or track section with minimum thickness of 33 mils (0.84 mm). Blocking shall be fastened to each adjacent joist through bent web of blocking, 33 mil clip angle or flange of web stiffener with two No.8 screws at each end. The depth of the blocking shall be equal to the depth of the joist. The minimum length of the angle shall be equal to the depth of the joist minus 2 inches (51 mm). Blocking shall be fastened through the floor sheathing and to the support with three No.8 screws (top and bottom).

505.3.4 Bearing stiffeners. Bearing stiffeners shall be installed at each joist bearing location in accordance with this section, except for joists lapped over an interior support not carrying a load-bearing wall above. Floor joists supporting jamb studs with multiple members shall have two bearing stiffeners in accordance with Figure 505.3.4(1). Bearing stiffeners shall be fabricated from a C-shaped, track or clip angle member in accordance with the one of following:

1. C-shaped bearing stiffeners:

   1.1 Where the joist is not carrying a load-bearing wall above, the bearing stiffener shall be a minimum 33 mil (0.84 mm) thickness.

   1.2 Where the joist is carrying a load-bearing wall above, the bearing stiffener shall be at least the same designation thickness as the wall stud above.

2. Track bearing stiffeners:

   2.1 Where the joist is not carrying a load-bearing wall above, the bearing stiffener shall be a minimum 43 mil (1.09 mm) thickness.

   2.2 Where the joist is carrying a load-bearing wall above, the bearing stiffener shall be at least one designation thickness greater than the wall stud above.

3. Clip angle bearing stiffeners: Where the clip angle bearing stiffener is fastened to both the web of the member it is stiffening and an adjacent rim track using the fastener pattern shown in Figure 505.3.4(2), the bearing stiffener shall be a minimum 2-inch by 2-inch (51 mm by 51 mm) angle sized in accordance with Tables 505.3.4(1), 505.3.4(2), 505.3.4(3), and 505.3.4(4).

The minimum length of a bearing stiffener shall be the depth of member being stiffened minus $^{3}/_{8}$ inch (9.5 mm). Each bearing stiffener shall be fastened to the web of the member it is stiffening as shown in Figure 505.3.4(2). Each clip angle bearing stiffener shall also be fastened to the web of the adjacent rim track using the fastener pattern shown in Figure 505.3.4(2). No. 8 screws shall be used for C-shaped and track members of any thickness and for clip angle members with a designation thickness less than or equal to 54. No. 10

screws shall be used for clip angle members with a designation thickness greater than 54.

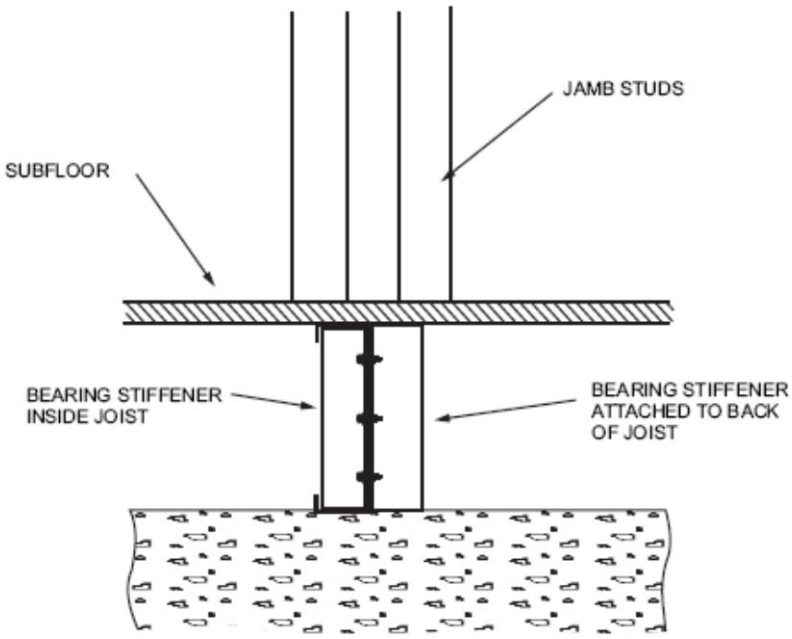

FIGURE 505.3.4(1)
BEARING STIFFENERS UNDER JAMB STUDS

TABLE 505.3.4(1)
CLIP ANGLE BEARING STIFFENERS
(20 psf equivalent snow load)

JOIST DESIGNATION	MINIMUM THICKNESS (mils) OF 2-INCH 2-INCH (51 mm 51 mm) CLIP ANGLE											
	Top floor				Bottom floor in 2 story Middle floor in 3 story				Bottom floor in 3 story			
	Joist spacing (inches)				Joist spacing (inches)				Joist spacing (inches)			
	12	16	19.2	24	12	16	19.2	24	12	16	19.2	24
800S162-33	43	43	43	43	43	54	68	68	68	97	97	—
800S162-43	43	43	43	43	54	54	68	68	97	97	97	97
800S162-54	43	43	43	43	43	54	68	68	68	97	97	—
800S162-68	43	43	43	43	43	43	54	68	54	97	97	—
800S162-97	43	43	43	43	43	43	43	43	43	43	54	97
1000S162-43	43	43	43	43	54	68	97	97	97	—	—	—
1000S162-54	43	43	43	43	54	68	68	97	97	97	—	—
1000S162-68	43	43	43	43	54	68	97	97	97	—	—	—

1000S162-97	43	43	43	43	43	43	43	54	43	68	97	—
1200S162-43	43	54	54	54	97	97	97	97	—	—	—	—
1200S162-54	54	54	54	54	97	97	97	97	—	—	—	—
1200S162-68	43	43	54	54	68	97	97	97	—	—	—	—
1200S162-97	43	43	43	43	43	54	68	97	97	—	—	—

For SI: 1 mil = 0.254 mm, 1 inch = 25.4 mm, 1 pound per square foot = 0.0479kPa.

TABLE 505.3.4(2)
CLIP ANGLE BEARING STIFFENERS
(30 psf equivalent snow load)

JOIST DESIGNATION	MINIMUM THICKNESS (mils) OF 2-INCH 2 INCH (51 mm 51 mm) CLIP ANGLE											
	Top floor				Bottom floor in 2 story Middle floor in 3 story				Bottom floor in 3 story			
	Joist spacing (inches)				Joist spacing (inches)				Joist spacing (inches)			
	12	16	19.2	24	12	16	19.2	24	12	16	19.2	24
800S162-33	43	43	43	43	54	68	68	97	97	97	97	—
800S162-43	43	43	43	54	68	68	68	97	97	97	97	—
800S162-54	43	43	43	43	54	68	68	97	97	97	—	—
800S162-68	43	43	43	43	43	54	68	97	68	97	97	—
800S162-97	43	43	43	43	43	43	43	43	43	43	68	97
1000S162-43	54	54	54	54	68	97	97	97	97	—	—	—
1000S162-54	54	54	54	54	68	97	97	97	97	—	—	—
1000S162-68	43	43	54	68	68	97	97	—	97	—	—	—
1000S162-97	43	43	43	43	43	43	54	68	54	97	—	—
1200S162-43	54	68	68	68	97	97	97	—	—	—	—	—
1200S162-54	68	68	68	68	97	97	—	—	—	—	—	—
1200S162-68	68	68	68	68	97	97	97	—	—	—	—	—
1200S162-97	43	43	43	43	54	68	97	—	97	—	—	—

For SI: 1 mil = 0.0254 mm, 1 inch = 25.4 mm, 1pound per square foot = 0.0479kPa.

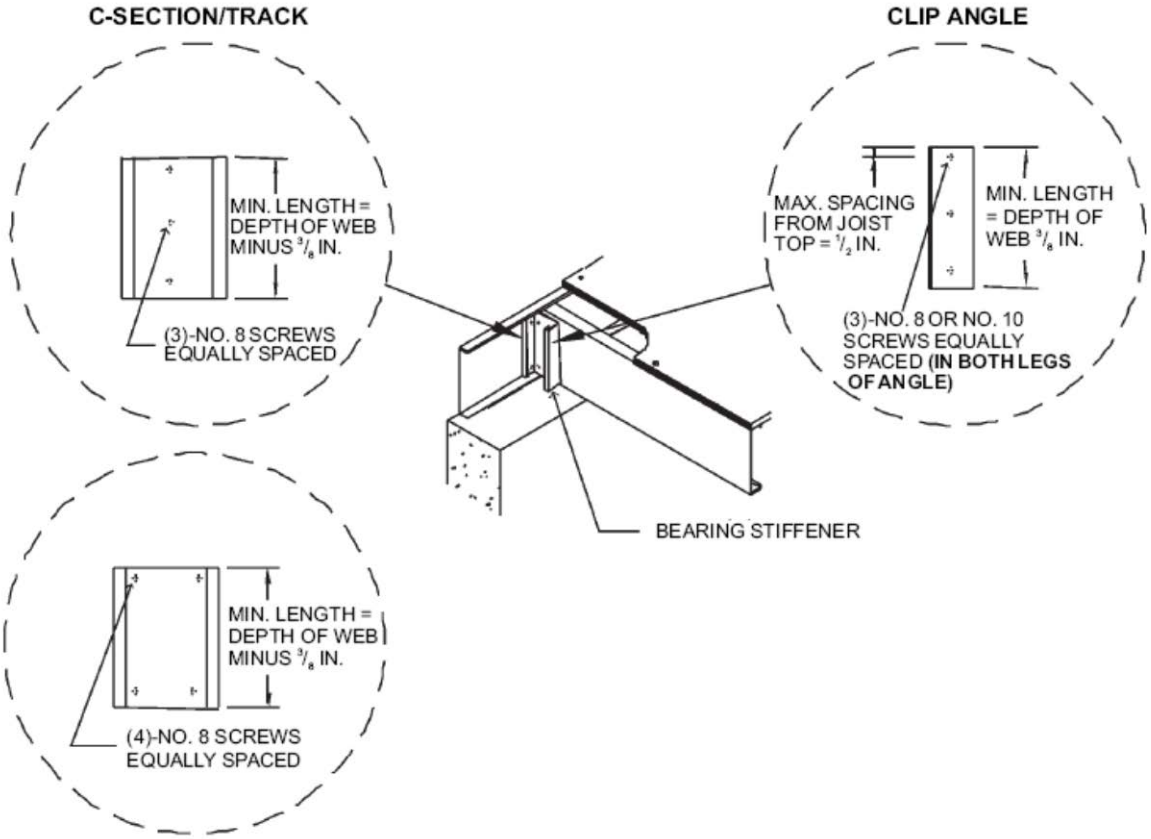

For SI: 1 inch = 25.4 mm.

FIGURE 505.3.4(2)
BEARING STIFFENER

TABLE 505.3.4(3)
CLIP ANGLE BEARING STIFFENERS
(50 psf equivalent snow load)

JOIST DESIGNATION	MINIMUM THICKNESS (mils) OF 2-INCH 2-INCH (51 mm 51 mm) CLIP ANGLE											
	Top floor				Bottom floor in 2 story Middle floor in 3 story				Bottom floor in 3 story			
	Joist spacing (inches)				Joist spacing (inches)				Joist spacing (inches)			
	12	16	19.2	24	12	16	19.2	24	12	16	19.2	24
800S162-33	54	54	54	54	68	97	97	97	97	—	—	—
800S162-43	68	68	68	68	97	97	97	97	—	—	—	—
800S162-54	54	68	68	68	97	97	97	97	—	—	—	—
800S162-68	43	43	54	54	68	97	97	97	97	—	—	—
800S162-97	43	43	43	43	43	43	43	54	54	68	97	—
1000S162-43	97	68	68	68	97	97	97	97	—	—	—	—
1000S162-54	97	97	68	68	97	97	97	—	—	—	—	—
1000S162-68	68	97	97	97	97	—	—	—	—	—	—	—
1000S162-97	43	43	43	43	54	68	97	97	—	—	—	—

1200S162-43	97	97	97	97	—	—	—	—	—	—	—	—
1200S162-54	—	97	97	97	—	—	—	—	—	—	—	—
1200S162-68	97	97	97	97	—	—	—	—	—	—	—	—
1200S162-97	54	68	68	97	97	—	—	—	—	—	—	—

For SI: 1 mil = 0.0254 mm, 1 inch = 25.4 mm, 1 pound per square foot = 0.0479kPa.

TABLE 505.3.4(4)
CLIP ANGLE BEARING STIFFENERS
(70 psf equivalent snow load)

JOIST DESIGNATION	MINIMUM THICKNESS (mils) OF 2-INCH 2-INCH (51 mm 51 mm) CLIP ANGLE											
	Top floor				Bottom floor in 2 story Middle floor in 3 story				Bottom floor in 3 story			
	Joist spacing (inches)				Joist spacing (inches)				Joist spacing (inches)			
	12	16	19.2	24	12	16	19.2	24	12	16	19.2	24
800S162-33	68	68	68	68	97	97	97	97	—	—	—	—
800S162-43	97	97	97	97	97	97	97	—	—	—	—	—
800S162-54	97	97	97	97	97	—	—	—	—	—	—	—
800S162-68	68	68	68	97	97	97	97	—	—	—	—	—
800S162-97	43	43	43	43	43	54	68	97	97	97	—	—
1000S162-43	97	97	97	97	—	—	—	—	—	—	—	—
1000S162-54	—	97	97	97	—	—	—	—	—	—	—	—
1000S162-68	97	97	—	—	—	—	—	—	—	—	—	—
1000S162-97	68	68	68	68	97	97	—	—	—	—	—	—
1200S162-43	97	97	97	97	—	—	—	—	—	—	—	—
1200S162-54	—	—	—	—	—	—	—	—	—	—	—	—
1200S162-68	—	—	—	—	—	—	—	—	—	—	—	—
1200S162-97	97	97	97	—	—	—	—	—	—	—	—	—

For SI: 1 mil 0.0254 mm, 1 inch = 25.4 mm, 1 pound per square foot = 0.0479kPa.

505.3.5 Cutting and notching. Flanges and lips of load-bearing cold-formed steel floor framing members shall not be cut or notched.

505.3.6 Floor cantilevers. Floor cantilevers for the top floor of a two-or three-story building or the first floor of a one-story building shall not exceed 24 inches (610 mm). Cantilevers, not exceeding 24 inches (610 mm) and supporting two stories and roof (i.e., first floor of a two-story building), shall also be permitted provided that all cantilevered joists are doubled (nested or back-to-back). The doubled cantilevered joists shall extend a minimum of 6 feet (1829 mm) toward the inside and shall be fastened with a minimum of

two No.8 screws spaced at 24 inches (610 mm) on center through the webs (for back-to-back) or flanges (for nested joists).

505.3.7 Splicing. Joists and other structural members shall not be spliced. Splicing of tracks shall conform to Figure 505.3.7.

505.3.8 Framing of floor openings. Openings in floors shall be framed with header and trimmer joists. Header joist spans shall not exceed 6 feet (1829 mm) or 8 feet (2438 mm) in length in accordance with Figure 505.3.8(1) or 505.3.8(2), respectively. Header and trimmer joists shall be fabricated from joist and track members, having a minimum size and thickness at least equivalent to the adjacent floor joists and shall be installed in accordance with Figures 505.3.8(1), 505.3.8(2), 505.3.8(3), and 505.3.8(4). Each header joist shall be connected to trimmer joists with four 2-inch-by-2-inch (51mm by 51 mm) clip angles. Each clip angle shall be fastened to both the header and trimmer joists with four No. 8 screws, evenly spaced, through each leg of the clip angle. The clip angles shall have a thickness not less than that of the floor joist. Each track section for a built-up header or trimmer joist shall extend the full length of the joist (continuous).

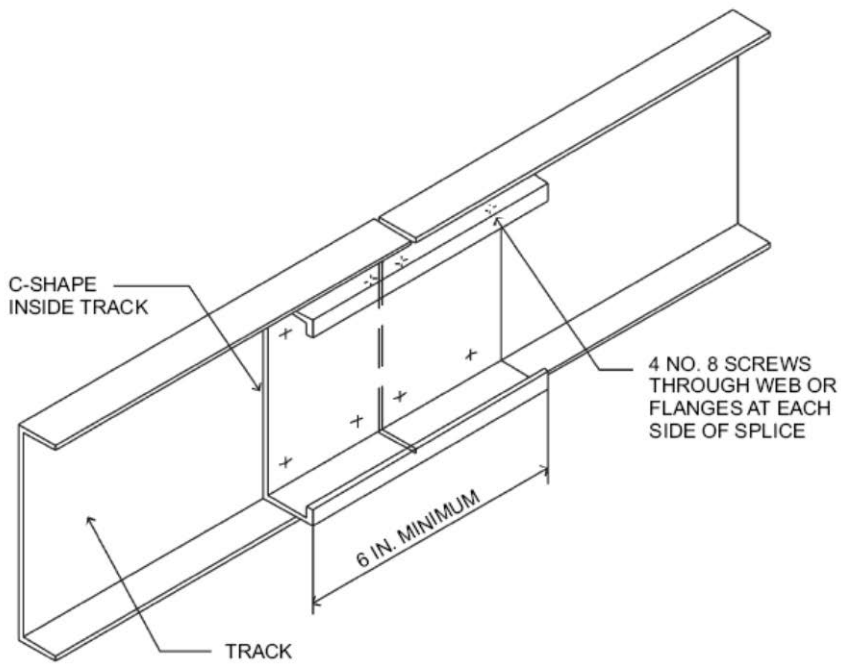

For SI: 1 inch = 25.4 mm.

FIGURE 505.3.7
TRACK SPLICE

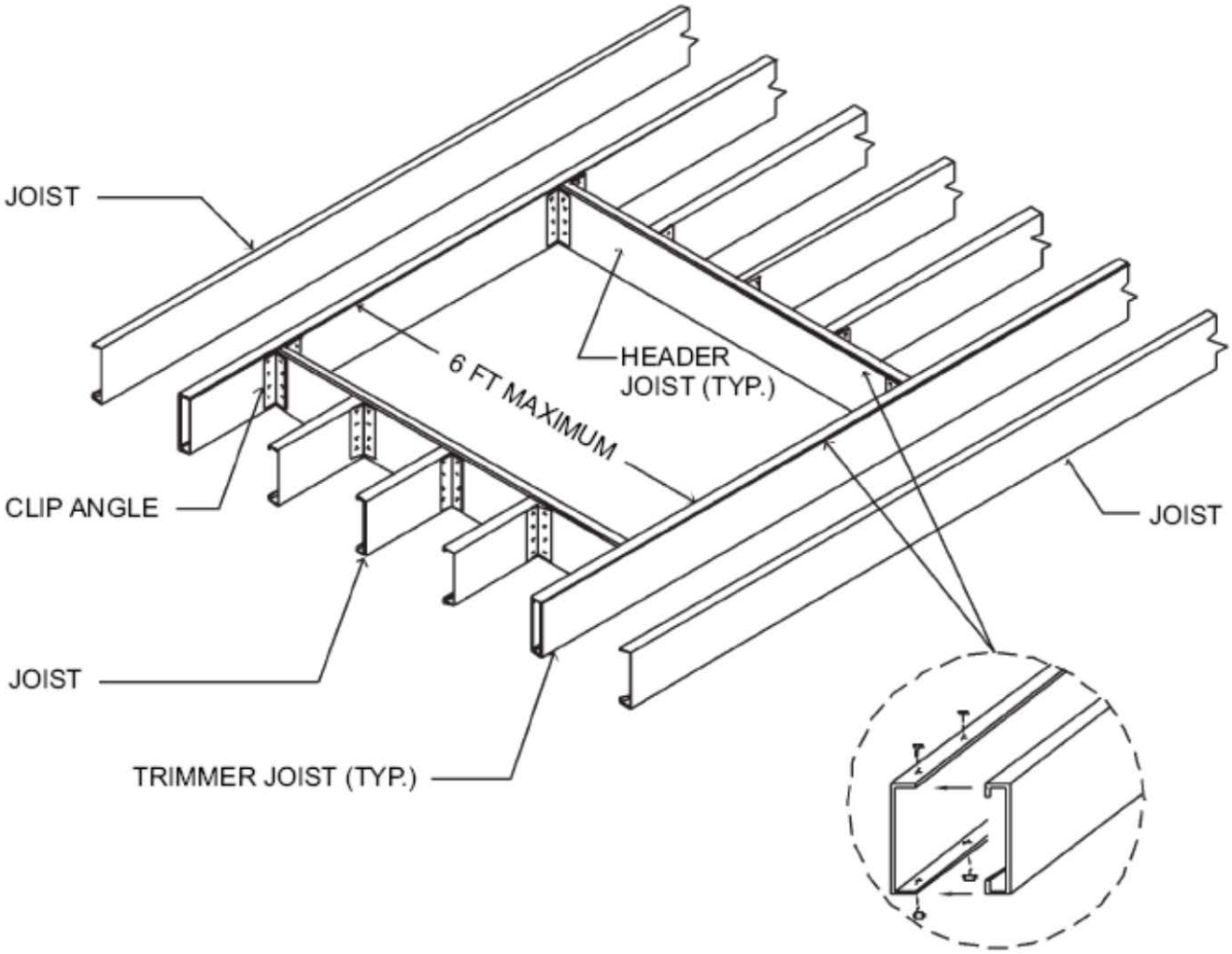

For SI: 1 foot = 304.8 mm.

FIGURE 505.3.8(1)
COLD-FORMED STEEL FLOOR CONSTRUCTION: 6-FOOT FLOOR OPENING

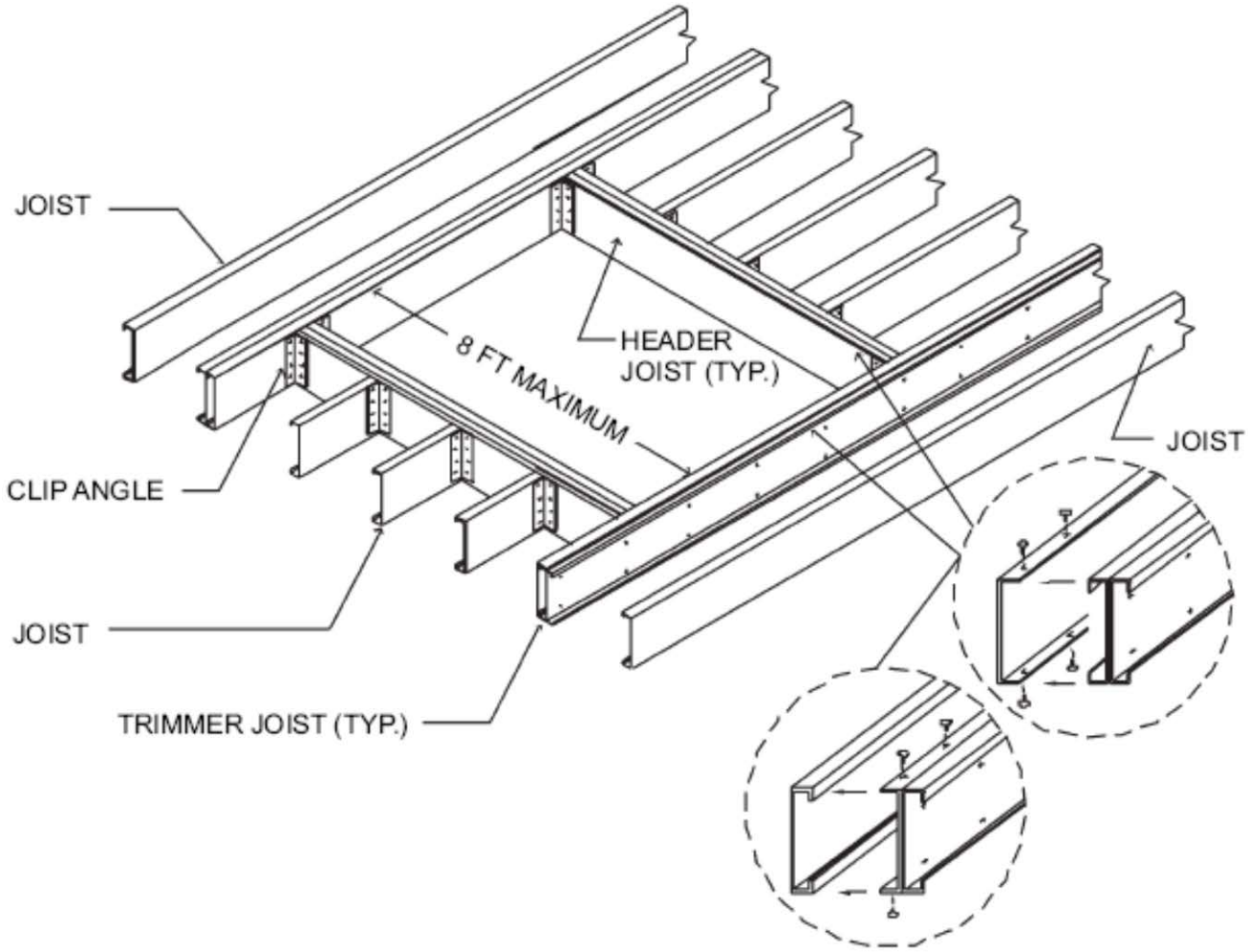

For SI: 1 foot = 304.8 mm.

FIGURE 505.3.8(2)
COLD-FORMED STEEL FLOOR CONSTRUCTION: 8-FOOT FLOOR OPENING

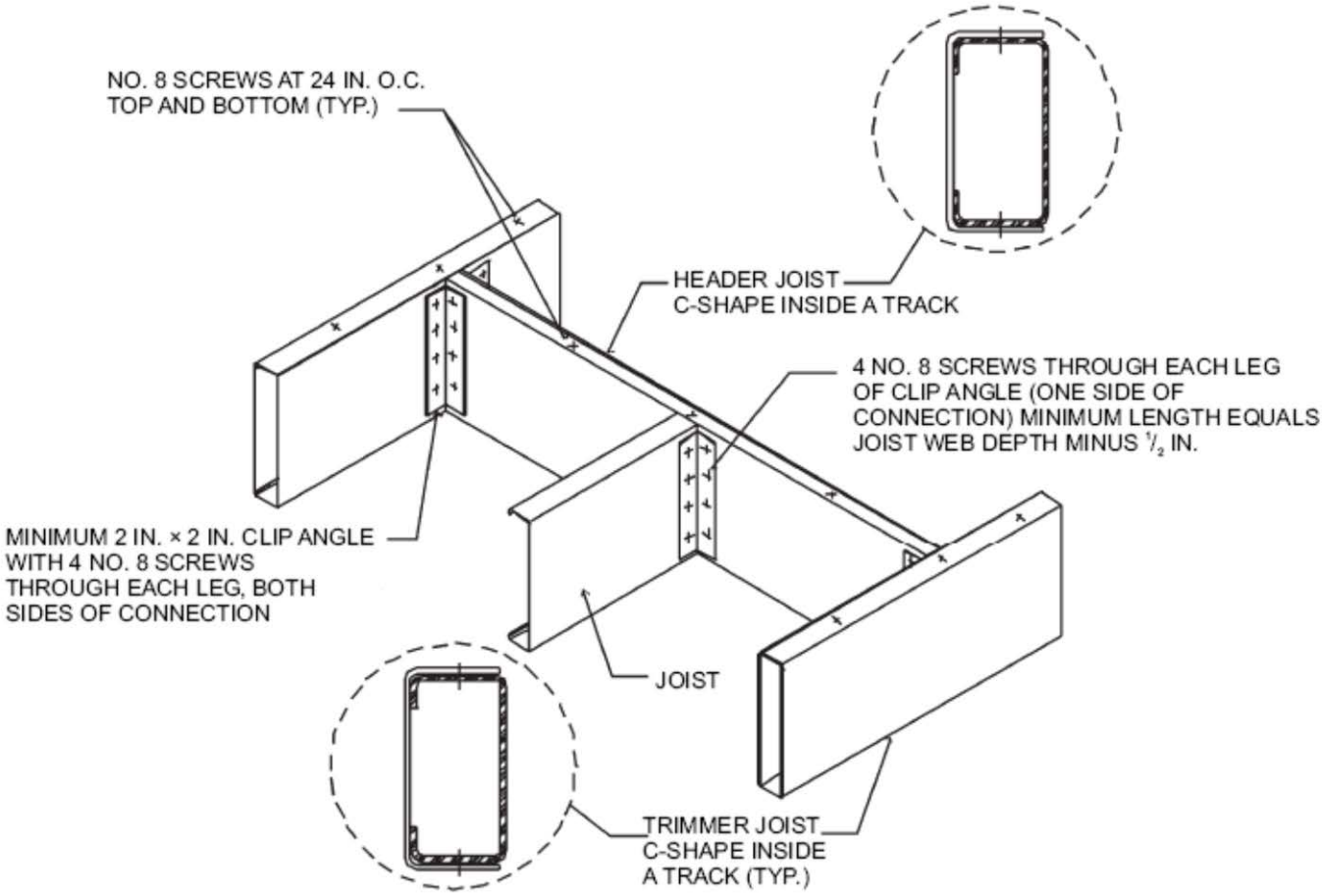

For SI: 1 inch = 25.4 mm.

FIGURE 505.3.8(3)
COLD-FORMED STEEL FLOOR CONSTRUCTION:
FLOOR HEADER TO TRIMMER CONNECTION—6-FOOT OPENING

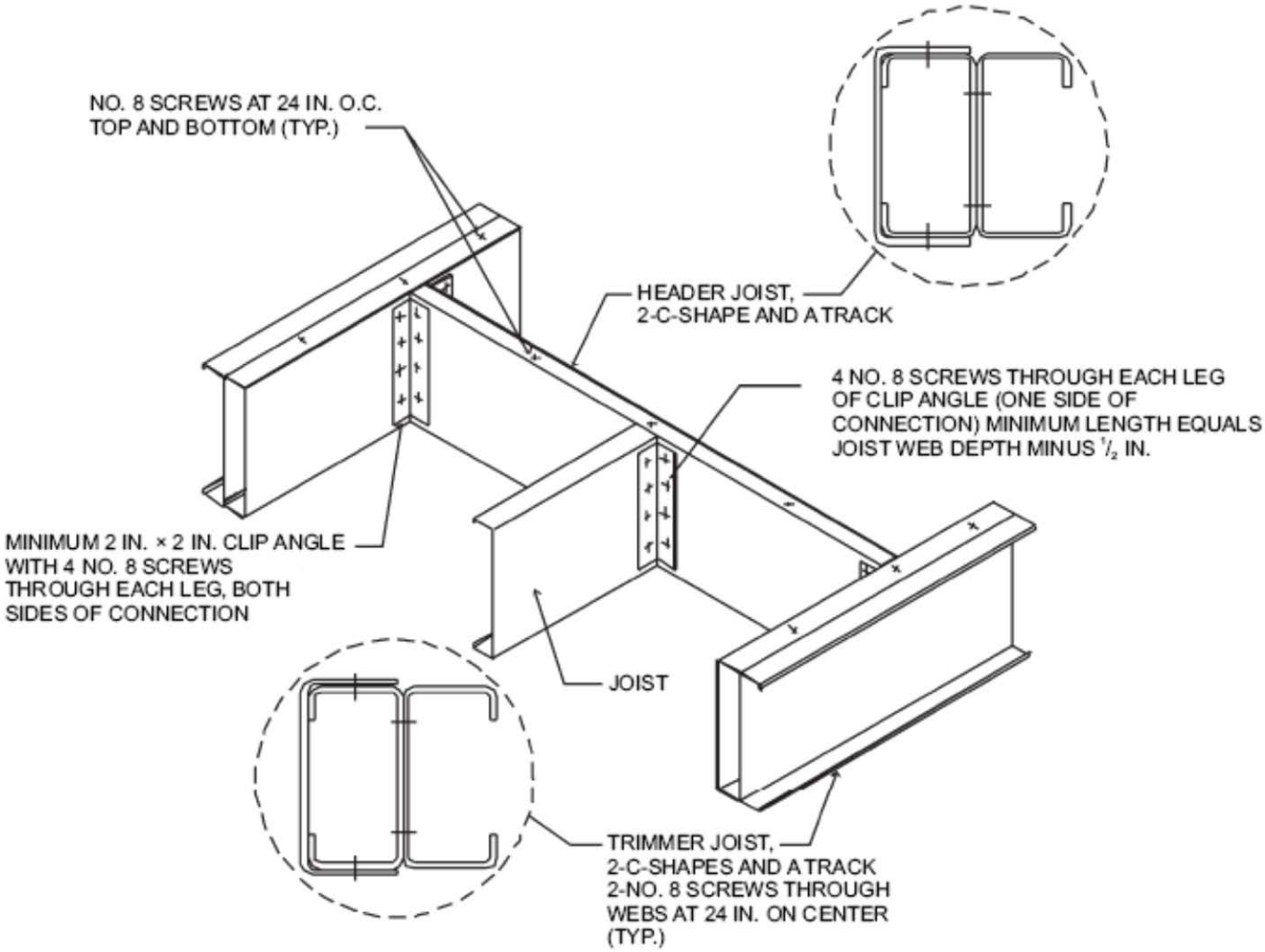

For SI: 1 inch = 25.4 mm.

FIGURE 505.3.8(4)
COLD-FORMED STEEL FLOOR CONSTRUCTION:
FLOOR HEADER TO TRIMMER CONNECTION—8-FOOT OPENING

SECTION 506
CONCRETE FLOORS (ON GROUND)

506.1 General. Concrete slab-on-ground floors shall be a minimum 3.5 inches (89 mm) thick (for expansive soils, see Section 403.1.8). The specified compressive strength of concrete shall be as set forth in Section 402.2.

506.2 Site preparation. The area within the foundation walls shall have all vegetation, top soil and foreign material removed.

506.2.1 Fill. Fill material shall be free of vegetation and foreign material. The fill shall be compacted to assure uniform support of the slab, and except where

approved, the fill depths shall not exceed 24 inches (610 mm) for clean sand or gravel and 8 inches (203 mm) for earth.

Exception: *Fills constructed of controlled low-strength material (CLSM) need not be compacted.*

506.2.2 Base. A 4-inch-thick (102 mm) base course consisting of clean graded sand, gravel, crushed stone or crushed blast-furnace slag passing a 2-inch (51 mm) sieve shall be placed on the prepared subgrade when the slab is below grade.

Exception: A base course is not required when the concrete slab is installed on well-drained or sand-gravel mixture soils classified as Group I according to the United Soil Classification System in accordance with Table 405.1.

506.2.3 Vapor retarder. A 6 mil (0.006 inch; 152 μm) polyethylene or approved vapor retarder with joints lapped not less than 6 inches (152 mm) shall be placed between the concrete floor slab and the base course or the prepared subgrade where no base course exists.

Exception: The vapor retarder may be omitted:

1. From detached garages, utility buildings and other unheated accessory structures.

2. For unheated storage rooms having an area of less than 70 square feet (6.5 m^2) and carports.

3. From driveways, walks, patios and other flatwork not likely to be enclosed and heated at a later date.

4. Where approved by the building official, based on local site conditions.

506.2.4 Reinforcement support. Where provided in slabs on ground, reinforcement shall be supported to remain in place from the center to upper one third of the slab for the duration of the concrete placement.

4101:8-19-01 Special fuel-burning equipment.

[Comment: When a reference is made within this rule to a federal statutory provision, an industry consensus standard, or any other technical publication, the specific date and title of the publication as well as the name and address of the promulgating agency are listed in rule 4101:8-44-01 of the Administrative Code. The application of the referenced standards shall be limited and as prescribed in section 102.5 of rule 4101:8-1-01 of the Administrative Code.]

SECTION 1901
RANGES AND OVENS

1901.1 Clearances. Freestanding or built-in ranges shall have a vertical clearance above the cooking top of not less than 30 inches (762 mm) to unprotected combustible material. Reduced clearances are permitted in accordance with the listing and labeling of the range hoods or appliances.

1901.2 Cooking appliances. Household cooking appliances shall be listed and labeled and shall be installed in accordance with the manufacturer's installation instructions. The installation shall not interfere with combustion air or access for operation and servicing.

SECTION 1902
SAUNA HEATERS

1902.1 Locations and protection. Sauna heaters shall be protected from accidental contact by persons with a guard of material having a low thermal conductivity, such as wood. The guard shall have no substantial effect on the transfer of heat from the heater to the room.

1902.2 Installation. Sauna heaters shall be installed in accordance with the manufacturer's installation instructions.

1902.3 Combustion air. Combustion air and venting for a nondirect vent-type heater shall be provided in accordance with Chapters 17 and 18, respectively.

1902.4 Controls. Sauna heaters shall be equipped with a thermostat that will limit room temperature to not greater than 194°F (90°C). Where the thermostat is not an integral part of the heater, the heat-sensing element shall be located within 6 inches (152 mm) of the ceiling.

SECTION 1903
STATIONARY FUEL CELL POWER PLANTS

1903.1 General. Stationary fuel cell power plants having a power output not exceeding 1,000 kW, shall be tested in accordance with ANSI Z21.83 and shall be installed in accordance with the manufacturer's installation instructions and NFPA 853.

SECTION 1904
GASEOUS HYDROGEN SYSTEMS

1904.1 Installation. Gaseous hydrogen systems shall be installed in accordance with the applicable requirements of Sections 1307.4 and 1903.1 and the "International Fuel Gas Code", the *fire code,* and the *"Ohio Building Code"*.

SECTION 1905
ENGINE AND GAS-TURBINE POWERED EQUIPMENT AND APPLIANCES

1905.1 General. *The installation of stationary internal combustion engines and gas turbines, including exhaust, fuel storage and piping, shall meet the requirements of this section.*

1905.2 Engine-driven equipment and appliances. *Permanently installed equipment and appliances powered by internal combustion engines and turbines shall be installed in accordance with the manufacturer's installation instructions and NFPA 37.*

1905.2.1 Fuel tanks connected to engine-driven building services equipment. *Fuel tanks piped to and supplying fuel for engine-driven building service equipment may be engine-mounted, located inside of a building, outside of a building, or on a roof in accordance with NFPA 37 or NFPA 30.*

1905.2.1.1 Engine-mounted tanks. *Engine-mounted tanks located outdoors may be located in accordance with Section 4.1.4 of NFPA 37 and shall be vented in accordance with NFPA 30. Engine-mounted tanks shall be provided with adequate clearance to enable filling, maintenance, and testing, shall be*

safeguarded against public access, and shall be protected from impact.

1905.2.1.2 Other fuel tanks. *Fuel tanks, other than engine-mounted tanks, piped to and supplying the engine shall be located, installed, and vented in accordance with the applicable sections of NFPA 37 or located, installed, and vented in accordance with NFPA 30.*

1905.2.2 Gaseous fuel supply. *Where an internal combustion engine supplied with gaseous fuel powers building service equipment, the fuel gas storage and piping system shall comply with NFPA 37 and Chapter 24.*

1905.3 Engine-driven Stationary generators. *Stationary emergency and standby power generator assemblies shall be listed in accordance with UL 2200 and shall comply with Section 3402.1.*

4101:8-22-01 Special piping and storage systems.

[Comment: When a reference is made within this rule to a federal statutory provision, an industry consensus standard, or any other technical publication, the specific date and title of the publication as well as the name and address of the promulgating agency are listed in rule 4101:8-44-01 of the Administrative Code. The application of the referenced standards shall be limited and as prescribed in section 102.5 of rule 4101:8-1-01 of the Administrative Code.]

2200.1 Scope. *This chapter shall govern the design, installation, construction and repair of fuel oil and diesel oil storage and piping systems supplying and piped to building service equipment. The storage of fuel oil and flammable and combustible liquids not associated with building services equipment shall be in accordance with Chapters 6 and 34 of the fire code and enforced by the fire official.*

SECTION 2201
OIL TANKS

2201.1 Materials. Supply tanks shall be listed and labeled and shall conform to UL 58 for underground tanks and UL 80 for indoor tanks.

2201.2 Above-ground tanks. The maximum amount of fuel oil *or diesel oil* stored above ground or inside of a building shall be 660 gallons (2498 L). The supply tank shall be supported on rigid noncombustible supports to prevent settling or shifting.

~~Exception~~ *Exceptions:*

1. The storage of fuel oil, used for space or water heating, above ground or inside buildings in quantities exceeding 660 gallons shall comply with NFPA 31.
2. *The storage of diesel oil supplying and piped to engine- driven building services equipment, including emergency and standby generators, above ground or inside buildings in quantities exceeding 660 gallons shall comply with NFPA 37.*

2201.2.1 Tanks within buildings. Supply tanks for use inside of buildings shall be of such size and shape to permit installation and removal from dwellings as whole units. Supply tanks larger than 10 gallons (38 L) shall be placed not less than 5 feet (1524 mm) from any fire or flame either within or external to any fuel-burning appliance.

2201.2.2 Outside above-ground tanks. Tanks installed outside above ground shall be a minimum of 5 feet (1524 mm) from an adjoining property line. Such tanks shall be suitably protected from the weather and from physical damage.

2201.3 Underground tanks. Excavations for underground tanks shall not undermine the foundations of existing structures. The clearance from the tank to the nearest wall of a basement, pit or property line shall not be less than 1 foot (305 mm). Tanks shall be set on and surrounded with noncorrosive inert materials such as clean earth, sand or gravel well tamped in place. Tanks shall be covered with not less than 1 foot (305 mm) of earth. Corrosion protection shall be provided in accordance with Section 2203.7.

2201.3.1 Regulated underground storage of fuel oil. *The design, installation, registration, and inspection of regulated underground storage tanks shall be in accordance with the fire code and rules adopted by the state fire marshal and enforced by the fire official, in accordance with sections 3737.87 to 3737.89 of the Revised Code. Underground storage tanks not regulated by the state fire marshal's Bureau of Underground Storage tanks shall comply with the applicable requirements of Chapter 23 of NFPA 30.*

2201.4 Multiple tanks. Cross connection of two supply tanks shall be permitted in accordance with Section 2203.6.

2201.5 Oil gauges. Inside tanks shall be provided with a device to indicate when the oil in the tank has reached a predetermined safe level. Glass gauges or a gauge subject to breakage that could result in the escape of oil from the tank shall not be used.

2201.6 Flood-resistant installation. In areas prone to flooding as established by Table 301.2(1), tanks shall be installed at or above the elevation required in Section 322.2.1 or 322.3.2 or shall be anchored to prevent flotation, collapse and lateral movement under conditions of the design flood.

2201.7 Tanks abandoned or removed. Exterior above-grade fill piping shall be removed when tanks are abandoned or removed. Tank abandonment and removal shall be in accordance with the *fire code*.

SECTION 2202
OIL PIPING, FITTING AND CONNECTIONS

2202.1 Materials. Piping shall consist of steel pipe, copper tubing or steel tubing conforming to ASTM A 539. Aluminum tubing shall not be used between the fuel-oil tank and the burner units.

2202.2 Joints and fittings. Piping shall be connected with standard fittings compatible with the piping material. Cast iron fittings shall not be used for oil piping. Unions requiring gaskets or packings, right or left couplings, and sweat fittings employing solder having a melting point less than 1,000°F (538°C) shall not be used for oil piping. Threaded joints and connections shall be made tight with a lubricant or pipe thread compound.

2202.3 Flexible connectors. Flexible metallic hoses shall be listed and labeled in accordance with UL 536 and shall be installed in accordance with their listing and labeling and the manufacturer's installation instructions. Connectors made from combustible materials shall not be used inside of buildings or above ground outside of buildings.

SECTION 2203
INSTALLATION

2203.1 General. Piping shall be installed in a manner to avoid placing stresses on the piping, and to accommodate expansion and contraction of the piping system.

2203.2 Supply piping. Supply piping used in the installation of oil burners and appliances shall be not smaller than $^{3}/_{8}$-inch (9 mm) pipe or $^{3}/_{8}$-inch (9 mm) outside diameter tubing. Copper tubing and fittings shall be a minimum of Type L.

2203.3 Fill piping. Fill piping shall terminate outside of buildings at a point at least 2 feet (610 mm) from any building opening at the same or lower level. Fill openings shall be equipped with a tight metal cover.

2203.4 Vent piping. Vent piping shall be not smaller than 1¼-inch (32 mm) pipe. Vent piping shall be laid to drain toward the tank without sags or traps in which the liquid can collect. Vent pipes shall not be cross connected with fill pipes, lines from burners or overflow lines from auxiliary tanks. The lower end of a vent pipe shall enter the tank through the top and shall extend into the tank not more than 1 inch (25 mm).

2203.5 Vent termination. Vent piping shall terminate outside of buildings at a point not less than 2 feet (610 mm), measured vertically or horizontally, from any building opening. Outer ends of vent piping shall terminate in a weather-proof cap or fitting having an unobstructed area at least equal to the cross-sectional area of the vent pipe, and shall be located sufficiently above the ground to avoid being obstructed by snow and ice.

2203.6 Cross connection of tanks. Cross connection of two supply tanks, not exceeding 660 gallons (2498 L) aggregate capacity, with gravity flow from one tank to another, shall be acceptable providing that the two tanks are on the same horizontal plane.

2203.7 Corrosion protection. Underground tanks and buried piping shall be protected by corrosion-resistant coatings or special alloys or fiberglass-reinforced plastic.

SECTION 2204
OIL PUMPS AND VALVES

2204.1 Pumps. Oil pumps shall be positive displacement types that automatically shut off the oil supply when stopped. Automatic pumps shall be listed and labeled in accordance with UL 343 and shall be installed in accordance with their listing.

2204.2 Shutoff valves. A readily accessible manual shutoff valve shall be installed between the oil supply tank and the burner. Where the shutoff valve is installed in the discharge line of an oil pump, a pressure-relief valve shall be incorporated to bypass or return surplus oil.

2204.3 Maximum pressure. Pressure at the oil supply inlet to an appliance shall be not greater than 3 pounds per square inch (20.7 kPa).

2204.4 Relief valves. Fuel-oil lines incorporating heaters shall be provided with relief valves that will discharge to a return line when excess pressure exists.

4101:8-24-01 Fuel gas.

[Comment: When a reference is made within this rule to a federal statutory provision, an industry consensus standard, or any other technical publication, the specific date and title of the publication as well as the name and address of the promulgating agency are listed in rule 4101:8-44-01 of the Administrative Code. The application of the referenced standards shall be limited and as prescribed in section 102.5 of rule 4101:8-1-01 of the Administrative Code.]

SECTION 2401
GENERAL

2401.1 Application. This chapter covers those fuel gas piping systems, fuel-gas appliances and related accessories, venting systems and combustion air configurations most commonly encountered in the construction of one-, two-, *and three*-family dwellings and structures regulated by this code.

Coverage of piping systems shall extend from the point of delivery to the outlet of the appliance shutoff valves (see definition of "Point of delivery"). Piping systems requirements shall include design, materials, components, fabrication, assembly, installation, testing, inspection, operation and maintenance. Requirements for gas appliances and related accessories shall include installation, combustion and ventilation air and venting and connections to piping systems.

The omission from this chapter of any material or method of installation provided for in the "International Fuel Gas Code" shall not be construed as prohibiting the use of such material or method of installation. Fuel-gas piping systems, fuel-gas appliances and related accessories, venting systems and combustion air configurations not specifically covered in these chapters shall comply with the applicable provisions of the "International Fuel Gas Code".

Gaseous hydrogen systems shall be regulated by Chapter 7 of the "International Fuel Gas Code".

This chapter shall not apply to the following:

1. Liquified natural gas (LNG) installations.

2. Temporary LP-gas piping for buildings under construction or renovation that is not to become part of the permanent piping system.

3. Except as provided in Section G2412.1.1, gas piping, meters, gas pressure regulators, and other appurtenances used by the serving gas supplier in the distribution of gas, other than undiluted LP-gas.

4. Portable LP-gas appliances and equipment of all types that is not connected to a fixed fuel piping system.

5. Portable fuel cell appliances that are neither connected to a fixed piping system nor interconnected to a power grid.

6. Installation of hydrogen gas, LP-gas and compressed natural gas (CNG) systems on vehicles.

7. *Existing fuel-gas piping systems, fuel-gas appliances and related accessories provided no serious hazard exists.*

SECTION 2402
GENERAL

2402.1 Scope. Unless otherwise expressly stated, the following words and terms shall, for the purposes of this chapter, have the meanings indicated in this chapter.

2402.2 Interchangeability. Words used in the present tense include the future; words in the masculine gender include the feminine and neuter; the singular number includes the plural and the plural, the singular.

2402.3 Terms defined in other codes. Where terms are not defined in this code and are defined in the "*Ohio Building Code*", *fire code*, *mechanical code* or *plumbing code*, such terms shall have meanings ascribed to them as in those codes.

SECTION 2403
GENERAL DEFINITIONS

AIR CONDITIONING, GAS FIRED. A gas-burning, automatically operated appliance for supplying cooled and/or dehumidified air or chilled liquid.

AIR, EXHAUST. Air being removed from any space or piece of equipment or appliance and conveyed directly to the atmosphere by means of openings or ducts.

AIR-HANDLING UNIT. A blower or fan used for the purpose of distributing supply air to a room, space or area.

AIR, MAKEUP. Air that is provided to replace air being exhausted.

ALTERATION. *The* construction or renovation to an existing structure other than repair or addition

ALTERATION. A change in a system that involves an extension, addition or change to the arrangement, type or purpose of the *existing* installation.

ANODELESS RISER. A transition assembly in which plastic piping is installed and terminated above ground outside of a building.

APPLIANCE. Any apparatus or device that uses gas as a fuel or raw material to produce light, heat, power, refrigeration or air conditioning.

APPLIANCE, AUTOMATICALLY CONTROLLED. Appliances equipped with an automatic burner ignition and safety shut-off device and other automatic devices, which accomplish complete turn-on and shut-off of the gas to the main burner or burners, and graduate the gas supply to the burner or burners, but do not affect complete shut-off of the gas.

APPLIANCE, FAN-ASSISTED COMBUSTION. An appliance equipped with an integral mechanical means to either draw or force products of combustion through the combustion chamber or heat exchanger.

APPLIANCE, UNVENTED. An appliance designed or installed in such a manner that the products of combustion are not conveyed by a vent or chimney directly to the outside atmosphere.

APPLIANCE, VENTED. An appliance designed and installed in such a manner that all of the products of combustion are conveyed directly from the appliance to the outside atmosphere through an approved chimney or vent system.

APPROVED. *Refers to approval by the building official as the result of review, investigation, inspection and testing in accordance with the provisions of this code.*

ATMOSPHERIC PRESSURE. The pressure of the weight of air and water vapor on the surface of the earth, approximately 14.7 pounds per square inch (psia) (101 kPa absolute) at sea level.

AUTOMATIC IGNITION. Ignition of gas at the burner(s) when the gas controlling device is turned on, including reignition if the flames on the burner(s) have been extinguished by means other than by the closing of the gas controlling device.

BAROMETRIC DRAFT REGULATOR. A balanced damper device attached to a chimney, vent connector, breeching or flue gas manifold to protect combustion appliances by controlling chimney draft. A double-acting barometric draft regulator is one whose balancing damper is free to move in either direction to protect combustion appliances from both excessive draft and backdraft.

BOILER, LOW-PRESSURE. *A steam boiler operating at pressures not exceeding fifteen psig, or a hot water heating boiler operating at pressures not exceeding one hundred sixty psig or temperatures not exceeding two hundred fifty degrees.*

Hot water heating boiler. A boiler in which no steam is generated, from which hot water is circulated for heating purposes and then returned to the boiler, and that operates at water pressures not exceeding 160 psig (1100 kPa gauge) and at water temperatures not exceeding 250°F (121°C) at or near the boiler outlet.

Hot water supply boiler. A boiler, completely filled with water, which furnishes hot water to be used externally to itself, and that operates at water pressures not exceeding 160 psig (1100 kPa gauge) and at water temperatures not exceeding 250°F (121°C) at or near the boiler outlet.

Steam heating boiler. A boiler in which steam is generated and that operates at a steam pressure not exceeding 15 psig (100 kPa gauge).

BONDING JUMPER. A conductor installed to electrically connect metallic gas piping to the grounding electrode system.

BRAZING. A metal joining process wherein coalescence is produced by the use of a nonferrous filler metal having a melting point above 1,000°F (538°C), but lower than that of the base metal being joined. The filler material is distributed between the closely fitted surfaces of the joint by capillary action.

BTU. Abbreviation for British thermal unit, which is the quantity of heat required to raise the temperature of 1 pound (454 g) of water 1°F (0.56°C) (1 Btu = 1055 J).

BUILDING OFFICIAL. *An individual who has received and maintains a certification of "Residential Building Official" in accordance with rules of the board of building standards.*

BURNER. A device for the final conveyance of the gas, or a mixture of gas and air, to the combustion zone.

Induced-draft. A burner that depends on draft induced by a fan that is an integral part of the appliance and is located downstream from the burner.

Power. A burner in which gas, air or both are supplied at pressures exceeding, for gas, the line pressure, and for air, atmospheric pressure, with this added pressure being applied at the burner.

CHIMNEY. A primarily vertical structure containing one or more flues, for the purpose of carrying gaseous products of combustion and air from an appliance to the outside atmosphere.

Factory-built chimney. A listed and labeled chimney composed of factory-made components, assembled in the field in accordance with manufacturer's instructions and the conditions of the listing.

Masonry chimney. A field-constructed chimney composed of solid masonry units, bricks, stones or concrete.

CLEARANCE. The minimum distance through air measured between the heat-producing surface of the mechanical appliance, device or equipment and the surface of the combustible material or assembly.

CLOTHES DRYER. An appliance used to dry wet laundry by means of heated air.

Type 1. Factory-built package, multiple production. Primarily used in the family living environment. Usually the smallest unit physically and in function output.

CODE. *The Residential Code of Ohio.*

COMBUSTION. In the context of this code, refers to the rapid oxidation of fuel accompanied by the production of heat or heat and light.

COMBUSTION AIR. Air necessary for complete combustion of a fuel, including theoretical air and excess air.

COMBUSTION CHAMBER. The portion of an appliance within which combustion occurs.

COMBUSTION PRODUCTS. Constituents resulting from the combustion of a fuel with the oxygen of the air, including the inert gases, but excluding excess air.

CONCEALED LOCATION. A location that cannot be accessed without damaging permanent parts of the building structure or finish surface. Spaces above, below or behind readily removable panels or doors shall not be considered as concealed.

CONCEALED PIPING. Piping that is located in a concealed location (see "Concealed location").

CONDENSATE. The liquid that condenses from a gas (including flue gas) caused by a reduction in temperature or increase in pressure.

CONNECTOR, APPLIANCE (Fuel). Rigid metallic pipe and fittings, semirigid metallic tubing and fittings or a listed and labeled device that connects an appliance to the gas piping system.

CONNECTOR, CHIMNEY OR VENT. The pipe that connects an appliance to a chimney or vent.

CONTROL. A manual or automatic device designed to regulate the gas, air, water or electrical supply to, or operation of, a mechanical system.

CONVERSION BURNER. A unit consisting of a burner and its controls for installation in an appliance originally utilizing another fuel.

CUBIC FOOT. The amount of gas that occupies 1 cubic foot (0.02832 m^3) when at a temperature of 60°F (16°C), saturated with water vapor and under a pressure equivalent to that of 30 inches of mercury (101 kPa).

DAMPER. A manually or automatically controlled device to regulate draft or the rate of flow of air or combustion gases.

DECORATIVE GAS APPLIANCE, VENTED. A vented appliance wherein the primary function lies in the aesthetic effect of the flames.

DECORATIVE GAS APPLIANCES FOR INSTALLATION IN VENTED FIREPLACES. A vented appliance designed for installation within the fire chamber of a vented fireplace, wherein the primary function lies in the aesthetic effect of the flames.

DEMAND. The maximum amount of gas input required per unit of time, usually expressed in cubic feet per hour, or Btu/h (1 Btu/h = 0.2931 W).

DESIGN FLOOD ELEVATION. The elevation of the "design flood," including wave height, relative to the datum specified on the community's legally designated flood hazard map.

DILUTION AIR. Air that is introduced into a draft hood and is mixed with the flue gases.

DIRECT-VENT APPLIANCES. *Fuel-burning appliance with a sealed combustion system that draws all air for combustion from the outside atmosphere and discharges all flue gases to the outside atmosphere.*

DRAFT. The pressure difference existing between the appliance or any component part and the atmosphere, that causes a continuous flow of air and products of combustion through the gas passages of the appliance to the atmosphere.

Mechanical or induced draft. The pressure difference created by the action of a fan, blower or ejector that is located between the appliance and the chimney or vent termination.

Natural draft. The pressure difference created by a vent or chimney because of its height, and the temperature difference between the flue gases and the atmosphere.

DRAFT HOOD. A nonadjustable device built into an appliance, or made as part of the vent connector from an appliance, that is designed to (1) provide for ready

escape of the flue gases from the appliance in the event of no draft, backdraft, or stoppage beyond the draft hood, (2) prevent a backdraft from entering the appliance, and (3) neutralize the effect of stack action of the chimney or gas vent upon operation of the appliance.

DRAFT REGULATOR. A device that functions to maintain a desired draft in the appliance by automatically reducing the draft to the desired value.

DRIP. The container placed at a low point in a system of piping to collect condensate and from which the condensate is removable.

DUCT FURNACE. A warm-air furnace normally installed in an air-distribution duct to supply warm air for heating. This definition shall apply only to a warm-air heating appliance that depends for air circulation on a blower not furnished as part of the furnace.

DWELLING UNIT. A single unit providing complete, independent living facilities for one or more persons, including permanent provisions for living, sleeping, eating, cooking and sanitation. . *The unit may include any accessory space intended for the exclusive use of the occupants of an individual dwelling unit such as a private garage, greenhouse, etc.*

EQUIPMENT *(OR FIXTURE)*. *Any plumbing, heating, electrical, ventilating, air conditioning, refrigerating and fire protection devices and components of systems other than appliances, and elevators, dumb waiters, and other mechanical facilities or installations that are related to building services.*

EXTERIOR MASONRY CHIMNEYS. Masonry chimneys exposed to the outdoors on one or more sides below the roof line.

FIREPLACE. A fire chamber and hearth constructed of noncombustible material for use with solid fuels and provided with a chimney.

Masonry fireplace. *A field-constructed fireplace composed of solid masonry units, bricks, stones or concrete.*

Factory-built fireplace. A fireplace composed of listed factory-built components assembled in accordance with the terms of listing to form the completed fireplace.

FLAME SAFEGUARD. A device that will automatically shut off the fuel supply to a main burner or group of burners when the means of ignition of such burners becomes inoperative, and when flame failure occurs on the burner or group of burners.

FLOOD HAZARD AREA. The greater of the following two areas:

1. The area within a floodplain subject to a 1 percent or greater chance of flooding in any given year.

2. This area designated as a flood hazard area on a community's flood hazard map, or otherwise legally designated.

FLOOR FURNACE. A completely self-contained furnace suspended from the floor of the space being heated, taking air for combustion from outside such space and with means for observing flames and lighting the appliance from such space.

FLUE, APPLIANCE. The passage(s) within an appliance through which combustion products pass from the combustion chamber of the appliance to the draft hood inlet opening on an appliance equipped with a draft hood or to the outlet of the appliance on an appliance not equipped with a draft hood.

FLUE COLLAR. That portion of an appliance designed for the attachment of a draft hood, vent connector or venting system.

FLUE GASES. Products of combustion plus excess air in appliance flues or heat exchangers.

FLUE LINER (LINING). A system or material used to form the inside surface of a flue in a chimney or vent, for the purpose of protecting the surrounding structure from the effects of combustion products and for conveying combustion products without leakage to the atmosphere.

FUEL GAS. A natural gas, manufactured gas, liquefied petroleum gas or mixtures of these gases.

FUEL GAS UTILIZATION EQUIPMENT. See "Appliance."

FURNACE. A completely self-contained heating unit that is designed to supply heated air to spaces remote from or adjacent to the appliance location.

FURNACE, CENTRAL. A self-contained appliance for heating air by transfer of heat of combustion through metal to the air, and designed to supply heated air through ducts to spaces remote from or adjacent to the appliance location.

FURNACE PLENUM. An air compartment or chamber to which one or more ducts are connected and which forms part of an air distribution system.

GAS CONVENIENCE OUTLET. A permanently mounted, manually operated device that provides the means for connecting an appliance to, and disconnecting an appliance from, the gas supply piping. The device includes an integral, manually operated valve with a nondisplaceable valve member and is designed so that disconnection of an appliance only occurs when the manually operated valve is in the closed position.

GAS PIPING. An installation of pipe, valves or fittings installed on a premises or in a building and utilized to convey fuel gas.

HAZARDOUS LOCATION. Any location considered to be a fire hazard for flammable vapors, dust, combustible fibers or other highly combustible substances.

HOUSE PIPING. See “Piping system.”

IGNITION PILOT. A pilot that operates during the lighting cycle and discontinues during main burner operation.

IGNITION SOURCE. A flame spark or hot surface capable of igniting flammable vapors or fumes. Such sources include appliance burners, burner ignitors and electrical switching devices.

INFRARED RADIANT HEATER. A heater which directs a substantial amount of its energy output in the form of infrared radiant energy into the area to be heated. Such heaters are of either the vented or unvented type.

JOINT, FLARED. A metal-to-metal compression joint in which a conical spread is made on the end of a tube that is compressed by a flare nut against a mating flare.

JOINT, MECHANICAL. A general form of gas-tight joints obtained by the joining of metal parts through a positive-holding mechanical construction, such as flanged joint, threaded joint, flared joint or compression joint.

JOINT, PLASTIC ADHESIVE. A joint made in thermoset plastic piping by the use of an adhesive substance which forms a continuous bond between the mating surfaces without dissolving either one of them.

LEAK CHECK. An operation performed on a gas piping system to verify that the system does not leak.

LIQUEFIED PETROLEUM GAS or LPG (LP-GAS). Liquefied petroleum gas composed predominately of propane, propylene, butanes or butylenes, or mixtures thereof that is gaseous under normal atmospheric conditions, but is capable of being liquefied under moderate pressure at normal temperatures.

LIVING SPACE. Space within a dwelling unit utilized for living, sleeping, eating, cooking, bathing, washing and sanitation purposes.

LOG LIGHTER, GAS-FIRED. A manually operated solid-fuel ignition appliance for installation in a vented solid-fuel-burning fireplace.

MAIN BURNER. A device or group of devices essentially forming an integral unit for the final conveyance of gas or a mixture of gas and air to the combustion zone, and on which combustion takes place to accomplish the function for which the appliance is designed.

METER. The instrument installed to measure the volume of gas delivered through it.

MODULATING. Modulating or throttling is the action of a control from its maximum to minimum position in either predetermined steps or increments of movement as caused by its actuating medium.

OFFSET (VENT). A combination of approved bends that make two changes in direction bringing one section of the vent out of line, but into a line parallel with the other section.

OUTLET. The point at which a gas-fired appliance connects to the gas piping system.

OXYGEN DEPLETION SAFETY SHUTOFF SYSTEM (ODS). A system designed to act to shut off the gas supply to the main and pilot burners if the oxygen in the surrounding atmosphere is reduced below a predetermined level.

PILOT. A small flame that is utilized to ignite the gas at the main burner or burners.

PIPING. Where used in this code, “piping” refers to either pipe or tubing, or both.

Pipe. A rigid conduit of iron, steel, copper, brass or plastic.

Tubing. Semirigid conduit of copper, aluminum, plastic or steel.

PIPING SYSTEM. All fuel piping, valves and fittings from the outlet of the point of delivery to the outlets of the appliance shutoff valves.

PLASTIC, THERMOPLASTIC. A plastic that is capable of being repeatedly softened by increase of temperature and hardened by decrease of temperature.

POINT OF DELIVERY. For natural gas systems, the point of delivery is the outlet of the service meter assembly or the outlet of the service regulator or service shutoff valve where a meter is not provided. Where a valve is provided at the outlet of the service meter assembly, such valve shall be considered to be downstream of the point of delivery. For undiluted liquefied petroleum gas systems, the point of delivery shall be considered to be the outlet of the first regulator that reduces pressure to 2 psig (13.8 kPa) or less.

PRESSURE DROP. The loss in pressure due to friction or obstruction in pipes, valves, fittings, regulators and burners.

PRESSURE TEST. An operation performed to verify the gas-tight integrity of gas piping following its installation or modification.

READY ACCESS (TO). That which enables a device, appliance or equipment to be directly reached, without requiring the removal or movement of any panel, door or similar obstruction. (See “Access.”)

REGULATOR. A device for controlling and maintaining a uniform gas supply pressure, either pounds-to-inches water column (MP regulator) or inches-to-inches water column (appliance regulator).

REGULATOR, GAS APPLIANCE. A pressure regulator for controlling pressure to the manifold of the gas appliance.

REGULATOR, LINE GAS PRESSURE. A device placed in a gas line between the service pressure regulator and the appliance for controlling, maintaining or reducing the pressure in that portion of the piping system downstream of the device.

REGULATOR, MEDIUM-PRESSURE (MP Regulator). A line pressure regulator that reduces gas pressure from the range of greater than 0.5 psig (3.4 kPa) and less than or equal to 5 psig (34.5 kPa) to a lower pressure.

REGULATOR, PRESSURE. A device placed in a gas line for reducing, controlling and maintaining the pressure in that portion of the piping system downstream of the device.

REGULATOR, SERVICE PRESSURE. A device installed by the serving gas supplier to reduce and limit the service line gas pressure to delivery pressure.

RELIEF OPENING. The opening provided in a draft hood to permit the ready escape to the atmosphere of the flue products from the draft hood in the event of no draft, backdraft or stoppage beyond the draft hood, and to permit air into the draft hood in the event of a strong chimney updraft.

RELIEF VALVE (DEVICE). A safety valve designed to forestall the development of a dangerous condition by relieving either pressure, temperature or vacuum in the hot water supply system.

RELIEF VALVE, PRESSURE. An automatic valve which opens and closes a relief vent, depending on whether the pressure is above or below a predetermined value.

RELIEF VALVE, TEMPERATURE.

Manual reset type. A valve which automatically opens a relief vent at a predetermined temperature and which must be manually returned to the closed position.

Reseating or self-closing type. An automatic valve which opens and closes a relief vent, depending on whether the temperature is above or below a predetermined value.

RELIEF VALVE, VACUUM. A valve that automatically opens and closes a vent for relieving a vacuum within the hot water supply system, depending on whether the vacuum is above or below a predetermined value.

RISER, GAS. A vertical pipe supplying fuel gas.

ROOM HEATER, UNVENTED. See "Unvented room heater."

ROOM HEATER, VENTED. A free-standing gas-fired heating unit used for direct heating of the space in and adjacent to that in which the unit is located. (See also "Vented room heater.")

SAFETY SHUTOFF DEVICE. See "Flame safeguard."

SHAFT. An enclosed space extending through one or more stories of a building, connecting vertical openings in successive floors, or floors and the roof.

SPECIFIC GRAVITY. As applied to gas, specific gravity is the ratio of the weight of a given volume to that of the same volume of air, both measured under the same condition.

THERMOSTAT.

Electric switch type. A device that senses changes in temperature and controls electrically, by means of separate components, the flow of gas to the burner(s) to maintain selected temperatures.

Integral gas valve type. An automatic device, actuated by temperature changes, designed to control the gas supply to the burner(s) in order to maintain temperatures between predetermined limits, and in which the thermal actuating element is an integral part of the device.

1. **Graduating thermostat.** A thermostat in which the motion of the valve is approximately in direct proportion to the effective motion of the thermal element induced by temperature change.

2. **Snap-acting thermostat.** A thermostat in which the thermostatic valve travels instantly from the closed to the open position, and vice versa.

TRANSITION FITTINGS, PLASTIC TO STEEL. An adapter for joining plastic pipe to steel pipe. The purpose of this fitting is to provide a permanent, pressure-tight connection between two materials that cannot be joined directly one to another.

UNIT HEATER.

High-static pressure type. A self-contained, automatically controlled, vented appliance having integral means for circulation of air against 0.2 inch w.c. (50 Pa) or greater static pressure. Such appliance is equipped with provisions for attaching an outlet air duct and, where the appliance is for indoor installation remote from the space to be heated, is also equipped with provisions for attaching an inlet air duct.

Low-static pressure type. A self-contained, automatically controlled, vented appliance, intended for installation in the space to be heated without the use of ducts, having integral means for circulation of air. Such units are allowed to be equipped with louvers or face extensions made in accordance with the manufacturer's specifications.

UNVENTED ROOM HEATER. An unvented heating appliance designed for stationary installation and utilized to provide comfort heating. Such appliances provide radiant heat or convection heat by gravity or fan circulation directly from the heater and do not utilize ducts.

VALVE. A device used in piping to control the gas supply to any section of a system of piping or to an appliance.

Appliance shutoff. A valve located in the piping system, used to isolate individual appliances for purposes such as service or replacement.

Automatic. An automatic or semiautomatic device consisting essentially of a valve and an operator that control the gas supply to the burner(s) during operation of an appliance. The operator shall be actuated by application of gas pressure on a flexible diaphragm, by electrical means, by mechanical means or by other approved means.

Automatic gas shutoff. A valve used in conjunction with an automatic gas shutoff device to shut off the gas supply to a water heating system. It shall be constructed integrally with the gas shutoff device or shall be a separate assembly.

Individual main burner. A valve that controls the gas supply to an individual main burner.

Main burner control. A valve that controls the gas supply to the main burner manifold.

Manual main gas-control. A manually operated valve in the gas line for the purpose of completely turning on or shutting off the gas supply to the appliance, except to a pilot or pilots that have independent shutoff.

Manual reset. An automatic shutoff valve installed in the gas supply piping and set to shut off when unsafe conditions occur. The device remains closed until manually reopened.

Service shutoff. A valve, installed by the serving gas supplier between the service meter or source of supply and the customer piping system, to shut off the entire piping system.

VENT. A pipe or other conduit composed of factory-made components, containing a passageway for conveying combustion products and air to the atmosphere, listed and labeled for use with a specific type or class of appliance.

Special gas vent. A vent listed and labeled for use with listed Category II, III and IV gas appliances.

Type B vent. A vent listed and labeled for use with appliances with draft hoods and other Category I appliances that are listed for use with Type B vents.

Type BW vent. A vent listed and labeled for use with wall furnaces.

Type L vent. A vent listed and labeled for use with appliances that are listed for use with Type L or Type B vents.

VENT CONNECTOR. See “Connector.”

VENT PIPING.

Breather. Piping run from a pressure-regulating device to the outdoors, designed to provide a reference to atmospheric pressure. If the device

incorporates an integral pressure relief mechanism, a breather vent can also serve as a relief vent.

Relief. Piping run from a pressure-regulating or pressure-limiting device to the outdoors, designed to provide for the safe venting of gas in the event of excessive pressure in the gas piping system.

VENTED GAS APPLIANCE CATEGORIES. Appliances that are categorized for the purpose of vent selection are classified into the following four categories:

Category I. An appliance that operates with a nonpositive vent static pressure and with a vent gas temperature that avoids excessive condensate production in the vent.

Category II. An appliance that operates with a nonpositive vent static pressure and with a vent gas temperature that is capable of causing excessive condensate production in the vent.

Category III. An appliance that operates with a positive vent static pressure and with a vent gas temperature that avoids excessive condensate production in the vent.

Category IV. An appliance that operates with a positive vent static pressure and with a vent gas temperature that is capable of causing excessive condensate production in the vent.

VENTED ROOM HEATER. A vented self-contained, free-standing, nonrecessed appliance for furnishing warm air to the space in which it is installed, directly from the heater without duct connections.

VENTED WALL FURNACE. A self-contained vented appliance complete with grilles or equivalent, designed for incorporation in or permanent attachment to the structure of a building, mobile home or travel trailer, and furnishing heated air circulated by gravity or by a fan directly into the space to be heated through openings in the casing. This definition shall exclude floor furnaces, unit heaters and central furnaces as herein defined.

VENTING SYSTEM. A continuous open passageway from the flue collar or draft hood of an appliance to the outside atmosphere for the purpose of removing flue or vent gases. A venting system is usually composed of a vent or a chimney and vent connector, if used, assembled to form the open passageway.

WALL HEATER, UNVENTED TYPE. A room heater of the type designed for insertion in or attachment to a wall or partition. Such heater does not incorporate concealed venting arrangements in its construction and discharges all products of combustion through the front into the room being heated.

WATER HEATER. Any heating appliance or equipment that heats potable water and supplies such water to the potable hot water distribution system.

SECTION 2404
GENERAL

2404.1 Scope. This section shall govern the approval and installation of all equipment and appliances that comprise parts of the installations regulated by this code in accordance with Section 2401.

2404.2 Other fuels. The requirements for combustion and dilution air for gas-fired appliances shall be governed by Section 2407. The requirements for combustion and dilution air for appliances operating with fuels other than fuel gas shall be regulated by Chapter 17.

2404.3 Listed and labeled. Appliances regulated by this code shall be listed and labeled for the application in which they are used unless otherwise approved in accordance with Section *106.4 and 106.5*. The approval of unlisted appliances in accordance with Section *106.4 and 106.5* shall be based upon approved engineering evaluation.

2404.4 Vibration isolation. Where means for isolation of vibration of an appliance is installed, an approved means for support and restraint of that appliance shall be provided.

2404.5 Repair. Defective material or parts shall be replaced or repaired in such a manner so as to preserve the original approval or listing.

2404.6 Wind resistance. Appliances and supports that are exposed to wind shall be designed and installed to resist the wind pressures determined in accordance with this code.

2404.7 Flood hazard. For structures located in flood hazard areas, the appliance, equipment and system installations regulated by this code shall be located at or

above the design flood elevation and shall comply with the flood-resistant construction requirements of Section 322.

> **Exception:** The appliance, equipment and system installations regulated by this code are permitted to be located below the design flood elevation provided that they are designed and installed to prevent water from entering or accumulating within the components and to resist hydrostatic and hydrodynamic loads and stresses, including the effects of buoyancy, during the occurrence of flooding to the design flood elevation and shall comply with the flood-resistant construction requirements of Section R322.

2404.8 Seismic resistance. When earthquake loads are applicable in accordance with this code, the supports shall be designed and installed for the seismic forces in accordance with this code.

2404.9 Rodentproofing. Buildings or structures and the walls enclosing habitable or occupiable rooms and spaces in which persons live, sleep or work, or in which feed, food or foodstuffs are stored, prepared, processed, served or sold, shall be constructed to protect against the entry of rodents.

2404.10 Auxiliary drain pan. Category IV condensing appliances shall be provided with an auxiliary drain pan where damage to any building component will occur as a result of stoppage in the condensate drainage system. Such pan shall be installed in accordance with the applicable provisions of Section M1411.

> **Exception:** An auxiliary drain pan shall not be required for appliances that automatically shut down operation in the event of a stoppage in the condensate drainage system.

SECTION 2405
STRUCTURAL SAFETY

2405.1 Structural safety. The building shall not be weakened by the installation of any gas piping. In the process of installing or repairing any gas piping, the finished floors, walls, ceilings, tile work or any other part of the building or premises which are required to be changed or replaced shall be left in a safe structural condition in accordance with the requirements of this code.

2405.2 Alterations to trusses. Truss members and components shall not be cut, drilled, notched, spliced or otherwise altered in any way without the written concurrence and approval of a registered design professional. Alterations resulting

in the addition of loads to any member (e.g., HVAC equipment, water heaters) shall not be permitted without verification that the truss is capable of supporting such additional loading.

2405.3 Engineered wood products. Cuts, notches and holes bored in trusses, structural composite lumber, structural glued-laminated members and I-joists are prohibited except where permitted by the manufacturer's recommendations or where the effects of such alterations are specifically considered in the design of the member by a registered design professional.

SECTION 2406
APPLIANCE LOCATION

2406.1 General. Appliances shall be located as required by this section, specific requirements elsewhere in this code and the conditions of the equipment and appliance listing.

2406.2 Prohibited locations. Appliances shall not be located in sleeping rooms, bathrooms, toilet rooms, storage closets or surgical rooms, or in a space that opens only into such rooms or spaces, except where the installation complies with one of the following:

1. The appliance is a direct-vent appliance installed in accordance with the conditions of the listing and the manufacturer's instructions.

2. Vented room heaters, wall furnaces, vented decorative appliances, vented gas fireplaces, vented gas fireplace heaters and decorative appliances for installation in vented solid fuel-burning fireplaces are installed in rooms that meet the required volume criteria of Section 2407.5.

3. A single wall-mounted unvented room heater is installed in a bathroom and such unvented room heater is equipped as specified in Section 2445.6 and has an input rating not greater than 6,000 Btu/h (1.76 kW). The bathroom shall meet the required volume criteria of Section 2407.5.

4. A single wall-mounted unvented room heater is installed in a bedroom and such unvented room heater is equipped as specified in Section 2445.6 and has an input rating not greater than 10,000 Btu/h (2.93 kW). The bedroom shall meet the required volume criteria of Section 2407.5.

5. The appliance is installed in a room or space that opens only into a bedroom or bathroom, and such room or space is used for no other purpose and is provided with a solid weather-stripped door equipped with an approved self-closing device. All combustion air shall be taken directly from the outdoors in accordance with Section 2407.6.

2406.3 Outdoor locations. Appliances installed in outdoor locations shall be either listed for outdoor installation or provided with protection from outdoor environmental factors that influence the operability, durability and safety of the appliance.

SECTION 2407
COMBUSTION, VENTILATION AND DILUTION AIR

2407.1 General. Air for combustion, ventilation and dilution of flue gases for appliances installed in buildings shall be provided by application of one of the methods prescribed in Sections 2407.5 through 2407.9. Where the requirements of Section 2407.5 are not met, outdoor air shall be introduced in accordance with one of the methods prescribed in Sections 2407.6 through 2407.9. Direct-vent appliances, gas appliances of other than natural draft design and vented gas appliances other than Category I shall be provided with combustion, ventilation and dilution air in accordance with the appliance manufacturer's instructions.

Exception: Type 1 clothes dryers that are provided with makeup air in accordance with Section 2439.4.

2407.2 Appliance location. Appliances shall be located so as not to interfere with proper circulation of combustion, ventilation and dilution air.

2407.3 Draft hood/regulator location. Where used, a draft hood or a barometric draft regulator shall be installed in the same room or enclosure as the appliance served so as to prevent any difference in pressure between the hood or regulator and the combustion air supply.

2407.4 Makeup air provisions. Where exhaust fans, clothes dryers and kitchen ventilation systems interfere with the operation of appliances, makeup air shall be provided.

2407.5 Indoor combustion air. The required volume of indoor air shall be determined in accordance with Section 2407.5.1 or 2407.5.2, except that where the air infiltration rate is known to be less than 0.40 air changes per hour (ACH),

Section 2407.5.2 shall be used. The total required volume shall be the sum of the required volume calculated for all appliances located within the space. Rooms communicating directly with the space in which the appliances are installed through openings not furnished with doors, and through combustion air openings sized and located in accordance with Section 2407.5.3, are considered to be part of the required volume.

2407.5.1 Standard method. The minimum required volume shall be 50 cubic feet per 1,000 Btu/h (4.8 m^3/kW).

2407.5.2 Known air-infiltration-rate method. Where the air infiltration rate of a structure is known, the minimum required volume shall be determined as follows:

For appliances other than fan assisted, calculate volume using Equation 24-1.

$$\text{Required Volume}_{\text{other}} \geq \frac{21\,ft^3}{ACH}\left(\frac{I_{other}}{1000\,Btu/hr}\right) \qquad \textbf{(Equation 24-1)}$$

For fan-assisted appliances, calculate volume using Equation 24-2.

$$\text{Required Volume}_{\text{fan}} \geq \frac{15\,ft^3}{ACH}\left(\frac{I_{other}}{1000\,Btu/hr}\right) \qquad \textbf{(Equation 24-2)}$$

where:

I_{other} = All appliances other than fan assisted (input in Btu/h).

I_{fan} = Fan-assisted appliance (input in Btu/h).

ACH = Air change per hour (percent of volume of space exchanged per hour, expressed as a decimal).

For purposes of this calculation, an infiltration rate greater than 0.60 ACH shall not be used in Equations 24-1 and 24-2.

2407.5.3 Indoor opening size and location. Openings used to connect indoor spaces shall be sized and located in accordance with Sections 2407.5.3.1 and 2407.5.3.2 (see Figure 2407.5.3).

2407.5.3.1 Combining spaces on the same story. Each opening shall have a minimum free area of 1 square inch per 1,000 Btu/h (2,200 mm^2/kW) of the total input rating of all appliances in the space, but not less than 100 square inches (0.06 m^2). One opening shall commence within 12 inches (305 mm) of the top and one opening shall commence within 12 inches (305 mm) of the bottom of the enclosure. The minimum dimension of air openings shall be not less than 3 inches (76 mm).

2407.5.3.2 Combining spaces in different stories. The volumes of spaces in different stories shall be considered as communicating spaces where such spaces are connected by one or more openings in doors or floors having a total minimum free area of 2 square inches per 1,000 Btu/h (4402 mm^2/kW) of total input rating of all appliances.

2407.6 Outdoor combustion air. Outdoor combustion air shall be provided through opening(s) to the outdoors in accordance with Section 2407.6.1 or 2407.6.2. The minimum dimension of air openings shall be not less than 3 inches (76 mm).

2407.6.1 Two-permanent-openings method. Two permanent openings, one commencing within 12 inches (305 mm) of the top and one commencing within 12 inches (305 mm) of the bottom of the enclosure, shall be provided. The openings shall communicate directly, or by ducts, with the outdoors or spaces that freely communicate with the outdoors.

Where directly communicating with the outdoors, or where communicating with the outdoors through vertical ducts, each opening shall have a minimum free area of 1 square inch per 4,000 Btu/h (550 mm^2/kW) of total input rating of all appliances in the enclosure [see Figures 2407.6.1(1) and 2407.6.1(2)].

Where communicating with the outdoors through horizontal ducts, each opening shall have a minimum free area of not less than 1 square inch per 2,000 Btu/h (1,100 mm^2/kW) of total input rating of all appliances in the enclosure [see Figure 2407.6.1(3)].

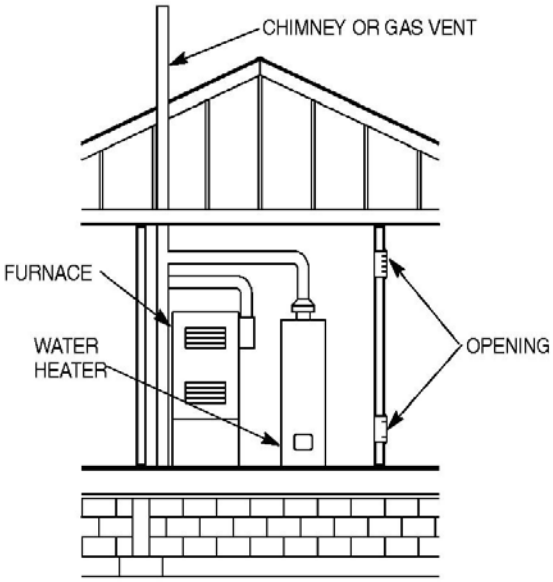

FIGURE 2407.5.3
ALL AIR FROM INSIDE THE BUILDING
(see Section 2407.5.3)

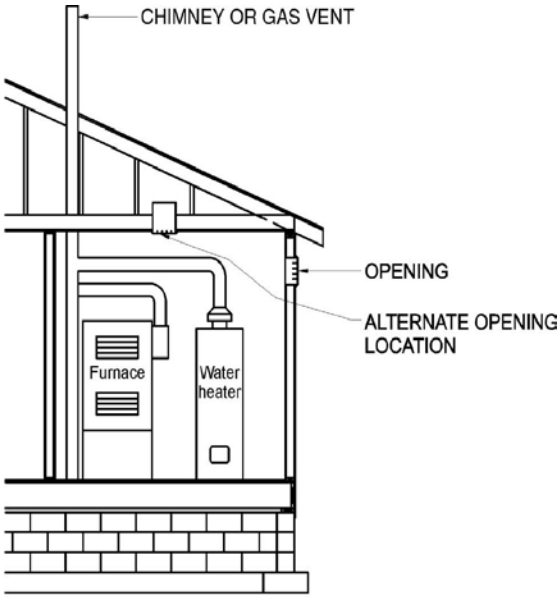

FIGURE 2407.6.2
SINGLE COMBUSTION AIR OPENING, ALL AIR FROM OUTDOORS
(see Section 2407.6.2)

2407.6.2 One-permanent-opening method. One permanent opening, commencing within 12 inches (305 mm) of the top of the enclosure, shall be provided. The appliance shall have clearances of at least 1 inch (25 mm) from the sides and back and 6 inches (152 mm) from the front of the appliance. The opening shall directly communicate with the outdoors or through a vertical or horizontal duct to the outdoors, or spaces that freely communicate with the outdoors (see Figure 2407.6.2) and shall have a minimum free area of 1 square inch per 3,000 Btu/h (734 mm^2/kW) of the total input rating of all appliances located in the enclosure and not less than the sum of the areas of all vent connectors in the space.

2407.7 Combination indoor and outdoor combustion air. The use of a combination of indoor and outdoor combustion air shall be in accordance with Sections 2407.7.1 through 2407.7.3.

2407.7.1 Indoor openings. Where used, openings connecting the interior spaces shall comply with Section 2407.5.3.

2407.7.2 Outdoor opening location. Outdoor opening(s) shall be located in accordance with Section 2407.6.

2407.7.3 Outdoor opening(s) size. The outdoor opening(s) size shall be calculated in accordance with the following:

1. The ratio of interior spaces shall be the available volume of all communicating spaces divided by the required volume.

2. The outdoor size reduction factor shall be one minus the ratio of interior spaces.

3. The minimum size of outdoor opening(s) shall be the full size of outdoor opening(s) calculated in accordance with Section 2407.6, multiplied by the reduction factor. The minimum dimension of air openings shall be not less than 3 inches (76 mm).

2407.8 Engineered installations. Engineered combustion air installations shall provide an adequate supply of combustion, ventilation and dilution air and shall be approved.

2407.9 Mechanical combustion air supply. Where all combustion air is provided by a mechanical air supply system, the combustion air shall be supplied from the outdoors at a rate not less than 0.35 cubic feet per minute per 1,000 Btu/h (0.034 m^3/min per kW) of total input rating of all appliances located within the space.

2407.9.1 Makeup air. Where exhaust fans are installed, makeup air shall be provided to replace the exhausted air.

2407.9.2 Appliance interlock. Each of the appliances served shall be interlocked with the mechanical air supply system to prevent main burner operation when the mechanical air supply system is not in operation.

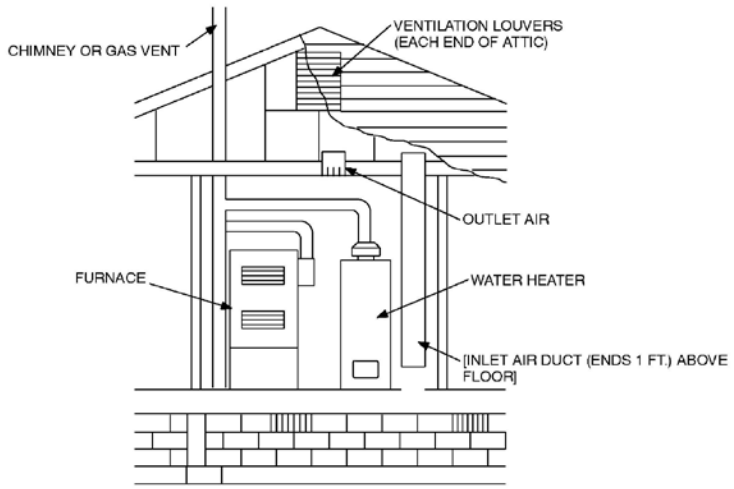

FIGURE 2407.6.1(1)
ALL AIR FROM OUTDOOR-INLET AIR FROM VENTILATED CRAWL SPACE AND OUTLET AIR TO VENTILATED ATTIC (see Section 2407.6.1)

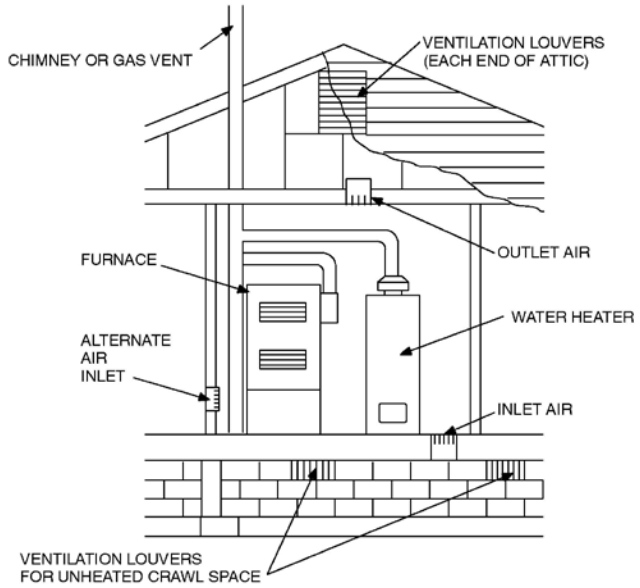

For SI: 1 foot = 304.8 mm.

FIGURE 2407.6.1(2)
ALL AIR FROM OUTDOORS THROUGH VENTILATED ATTIC
(see Section 2407.6.1)

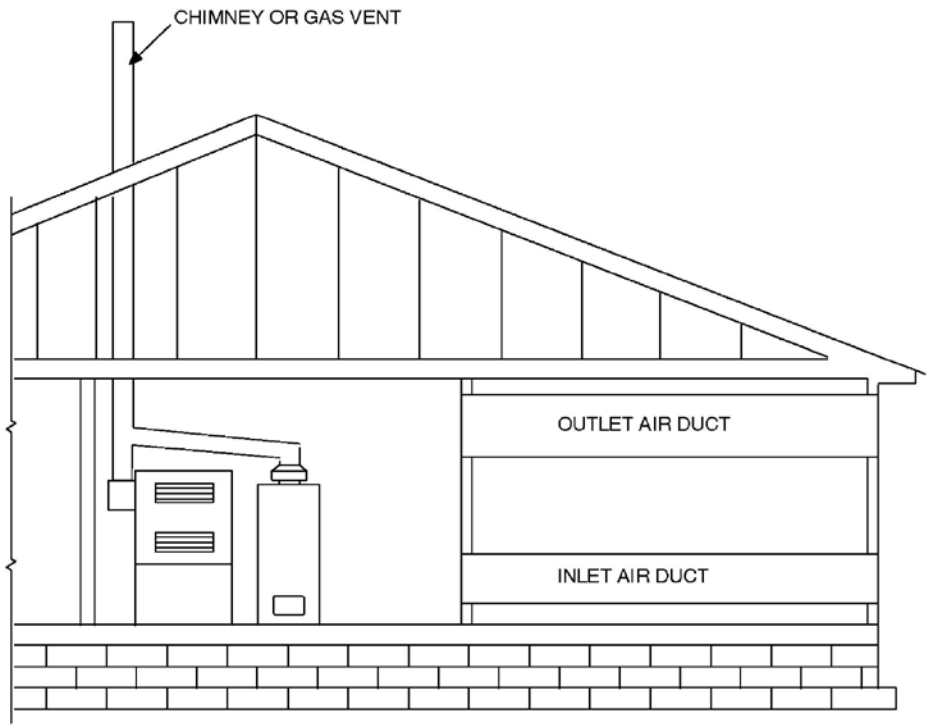

FIGURE 2407.6.1(3)
ALL AIR FROM OUTDOORS
(see Section 2407.6.1)

2407.9.3 Combined combustion air and ventilation air system. Where combustion air is provided by the building's mechanical ventilation system, the system shall provide the specified combustion air rate in addition to the required ventilation air.

2407.10 Louvers and grilles. The required size of openings for combustion, ventilation and dilution air shall be based on the net free area of each opening. Where the free area through a design of louver, grille or screen is known, it shall be used in calculating the size opening required to provide the free area specified. Where the design and free area of louvers and grilles are not known, it shall be assumed that wood louvers will have 25-percent free area and metal louvers and grilles will have 75-percent free area. Screens shall have a mesh size not smaller than ¼ inch (6.4 mm). Nonmotorized louvers and grilles shall be fixed in the open position. Motorized louvers shall be interlocked with the appliance so that they are proven to be in the full open position prior to main burner ignition and during

main burner operation. Means shall be provided to prevent the main burner from igniting if the louvers fail to open during burner start-up and to shut down the main burner if the louvers close during operation.

2407.11 Combustion air ducts. Combustion air ducts shall comply with all of the following:

1. Ducts shall be constructed of galvanized steel complying with Chapter 16 or of a material having equivalent corrosion resistance, strength and rigidity.

   Exception: Within dwellings units, unobstructed stud and joist spaces shall not be prohibited from conveying combustion air, provided that not more than one required fireblock is removed.

2. Ducts shall terminate in an unobstructed space allowing free movement of combustion air to the appliances.

3. Ducts shall serve a single enclosure.

4. Ducts shall not serve both upper and lower combustion air openings where both such openings are used. The separation between ducts serving upper and lower combustion air openings shall be maintained to the source of combustion air.

5. Ducts shall not be screened where terminating in an attic space.

6. Horizontal upper combustion air ducts shall not slope downward toward the source of combustion air.

7. The remaining space surrounding a chimney liner, gas vent, special gas vent or plastic piping installed within a masonry, metal or factory-built chimney shall not be used to supply combustion air.

   Exception: Direct-vent gas-fired appliances designed for installation in a solid fuel-burning fireplace where installed in accordance with the manufacturer's instructions.

8. Combustion air intake openings located on the exterior of a building shall have the lowest side of such openings located not less than 12 inches (305 mm) vertically from the adjoining finished ground level.

2407.12 Protection from fumes and gases. Where corrosive or flammable process fumes or gases, other than products of combustion, are present, means for the disposal of such fumes or gases shall be provided. Such fumes or gases include carbon monoxide, hydrogen sulfide, ammonia, chlorine and halogenated hydrocarbons.

In barbershops, beauty shops and other facilities where chemicals that generate corrosive or flammable products, such as aerosol sprays, are routinely used, nondirect vent-type appliances shall be located in a mechanical room separated or partitioned off from other areas with provisions for combustion air and dilution air from the outdoors. Direct-vent appliances shall be installed in accordance with the appliance manufacturer's installation instructions.

SECTION 2408
INSTALLATION

2408.1 General. Equipment and appliances shall be installed as required by the terms of their approval, in accordance with the conditions of listing, the manufacturer's instructions and this code. Manufacturers' installation instructions shall be available on the job site at the time of inspection. Where a code provision is less restrictive than the conditions of the listing of the equipment or appliance or the manufacturer's installation instructions, the conditions of the listing and the manufacturer's installation instructions shall apply.

Unlisted appliances approved in accordance with Section 2404.3 shall be limited to uses recommended by the manufacturer and shall be installed in accordance with the manufacturer's instructions, the provisions of this code and the requirements determined by the *building* official.

2408.2 Elevation of ignition source. Equipment and appliances having an ignition source shall be elevated such that the source of ignition is not less than 18 inches (457 mm) above the floor in hazardous locations and public garages, private garages, repair garages, motor fuel-dispensing facilities and parking garages. For the purpose of this section, rooms or spaces that are not part of the living space of a dwelling unit and that communicate directly with a private garage through openings shall be considered to be part of the private garage.

> **Exception:** Elevation of the ignition source is not required for appliances that are listed as flammable vapor ignition resistant.

2408.2.1 Installation in residential garages. In residential garages where appliances are installed in a separate, enclosed space having access only from outside of the garage, such appliances shall be permitted to be installed at floor level, provided that the required combustion air is taken from the exterior of the garage.

2408.3 Private garages. Appliances located in private garages shall be installed with a minimum clearance of 6 feet (1829 mm) above the floor.

Exception: The requirements of this section shall not apply where the appliances are protected from motor vehicle impact and installed in accordance with Section 2408.2.

2408.4 Clearances from grade. Equipment and appliances installed at grade level shall be supported on a level concrete slab or other approved material extending not less than 3 inches (76 mm) above adjoining grade or shall be suspended not less than 6 inches (152 mm) above adjoining grade. Such supports shall be installed in accordance with the manufacturer's installation instructions.

2408.5 Clearances to combustible construction. Heat-producing equipment and appliances shall be installed to maintain the required clearances to combustible construction as specified in the listing and manufacturer’s instructions. Such clearances shall be reduced only in accordance with Section 2409. Clearances to combustibles shall include such considerations as door swing, drawer pull, overhead projections or shelving and window swing. Devices, such as door stops or limits and closers, shall not be used to provide the required clearances.

2408.6 Avoid strain on gas piping. Appliances shall be supported and connected to the piping so as not to exert undue strain on the connections.

SECTION 2409
CLEARANCE REDUCTION

2409.1 Scope. This section shall govern the reduction in required clearances to combustible materials and combustible assemblies for chimneys, vents, appliances, devices and equipment.

2409.2 Reduction table. The allowable clearance reduction shall be based on one of the methods specified in Table 2409.2 or shall utilize an assembly listed for such application. Where required clearances are not listed in Table 2409.2, the

reduced clearances shall be determined by linear interpolation between the distances listed in the table. Reduced clearances shall not be derived by extrapolation below the range of the table. The reduction of the required clearances to combustibles for listed and labeled appliances and equipment shall be in accordance with the requirements of this section except that such clearances shall not be reduced where reduction is specifically prohibited by the terms of the appliance or equipment listing [see Figures 2409.2(1), 2409.2(2) and 2409.2(3)].

2409.3 Clearances for indoor air-conditioning appliances. Clearance requirements for indoor air-conditioning appliances shall comply with Sections 2409.3.1 through 2409.3.5.

2409.3.1 Appliances installed in rooms that are large in comparison with the size of the appliances. Air-conditioning appliances installed in rooms that are large in comparison with the size of the appliance shall be installed with clearances in accordance with the manufacturer's instructions.

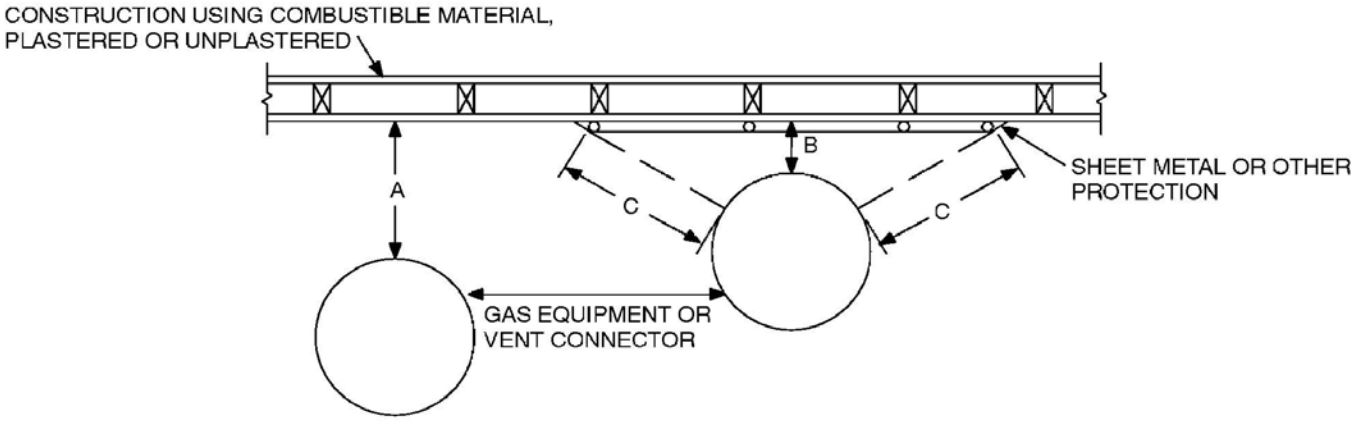

NOTES:
"A" equals the clearance with no protection.
"B" equals the reduced clearance permitted in accordance with Table 2409.2. The protection applied to the construction using combustible material shall extend far enough in each direction to make "C" equal to "A."

For SI: 1 inch = 25.4 mm.

FIGURE 2409.2(1)
EXTENT OF PROTECTION NECESSARY TO REDUCE CLEARANCES FROM GAS EQUIPMENT OR VENT CONNECTORS

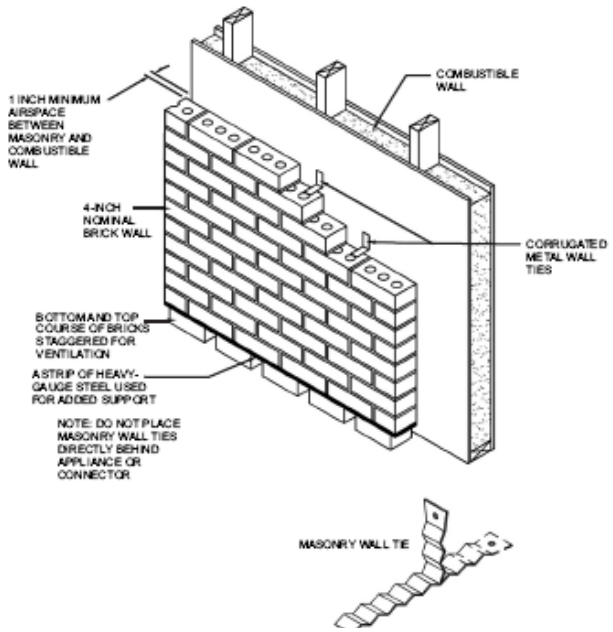

FIGURE 2409.2(2)
WALL PROTECTOR CLEARANCE REDUCTION SYSTEM FUEL GAS

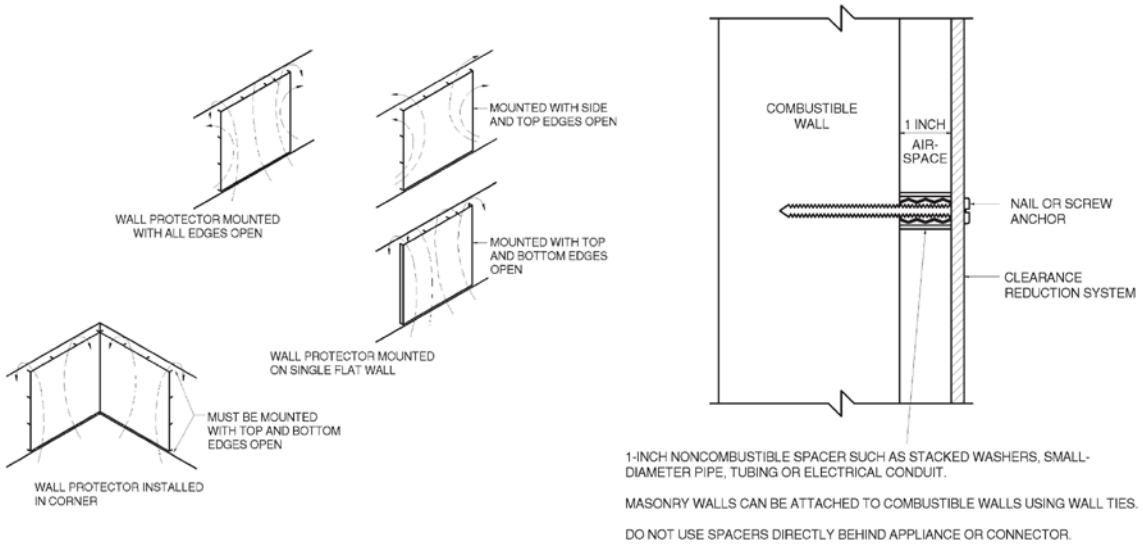

For SI: 1 inch = 25.4 mm.

FIGURE 2409.2(3)
MASONRY CLEARANCE REDUCTION SYSTEM

2409.3.2 Appliances installed in rooms that are not large in comparison with the size of the appliances. Air-conditioning appliances installed in rooms that are not large in comparison with the size of the appliance, such as alcoves and closets, shall be listed for such installations and installed in accordance with the manufacturer's instructions. Listed clearances shall not be reduced by the protection methods described in Table 2409.2, regardless of whether the enclosure is of combustible or noncombustible material.

2409.3.3 Clearance reduction. Air-conditioning appliances installed in rooms that are large in comparison with the size of the appliance shall be permitted to be installed with reduced clearances to combustible material, provided that the combustible material or appliance is protected as described in Table 2409.2.

2409.3.4 Plenum clearances. Where the furnace plenum is adjacent to plaster on metal lath or noncombustible material attached to combustible material, the clearance shall be measured to the surface of the plaster or other noncombustible finish where the clearance specified is 2 inches (51 mm) or less.

2409.3.5 Clearance from supply ducts. Air-conditioning appliances shall have the clearance from supply ducts within 3 feet (914 mm) of the furnace plenum be not less than that specified from the furnace plenum. Clearance is not necessary beyond this distance.

2409.4 Central heating boilers and furnaces. Clearance requirements for central-heating boilers and furnaces shall comply with Sections 2409.4.1 through 2409.4.6. The clearance to these appliances shall not interfere with combustion air; draft hood clearance and relief; and accessibility for servicing.

2409.4.1 Appliances installed in rooms that are large in comparison with the size of the appliances. Central-heating furnaces and low-pressure boilers installed in rooms large in comparison with the size of the appliance shall be installed with clearances in accordance with the manufacturer's instructions.

2409.4.2 Appliances installed in rooms that are not large in comparison with the size of the appliances. Central-heating furnaces and low-pressure boilers installed in rooms that are not large in comparison with the size of the appliance, such as alcoves and closets, shall be listed for such installations. Listed clearances shall not be reduced by the protection methods described in

Table 2409.2 and illustrated in Figures 2409.2(1) through 2409.2(3), regardless of whether the enclosure is of combustible or noncombustible material.

2409.4.3 Clearance reduction. Central heating furnaces and low-pressure boilers installed in rooms that are large in comparison with the size of the appliance shall be permitted to be installed with reduced clearances to combustible material provided the combustible material or equipment is protected as described in Table 2409.2.

2409.4.4 Plenum clearances. Where the furnace plenum is adjacent to plaster on metal lath or noncombustible material attached to combustible material, the clearance shall be measured to the surface of the plaster or other noncombustible finish where the clearance specified is 2 inches (51 mm) or less.

2409.4.5 Clearance from supply ducts. Central-heating furnaces shall have the clearance from supply ducts within 3 feet (914 mm) of the furnace plenum be not less than that specified from the furnace plenum. No clearance is necessary beyond this distance.

2409.4.6 Clearance for servicing appliances. Front clearance shall be sufficient for servicing the burner and the furnace or boiler.

SECTION 2410
ELECTRICAL

2410.1 Grounding. Gas piping shall not be used as a grounding electrode.

2410.2 Connections. Electrical connections between appliances and the building wiring, including the grounding of the appliances, shall conform to *NFPA 70*.

SECTION 2411
ELECTRICAL BONDING

2411.1 Pipe and tubing other than CSST. Each above-ground portion of a gas piping system other than corrugated stainless steel tubing (CSST), that is likely to become energized shall be electrically continuous and bonded to an effective ground-fault current path. Gas piping, other than CSST, shall be considered to be bonded where it is connected to appliances that are connected to the equipment grounding conductor of the circuit supplying that appliance.

2411.1.1 CSST. Corrugated stainless steel tubing (CSST) gas piping systems *and piping systems containing one or more segments of CSST* shall be bonded to the electrical service grounding electrode system ~~at the point where the gas service enters the building. The bonding jumper shall be not smaller than 6 AWG copper wire or equivalent~~ *or, where provided, the lightning protection electrode system*.

2411.1.1.1 Point of Connection*. The body jumper shall connect to a metallic pipe, pipe fitting or CSST fitting.*

2411.1.1.2 Size and Material of jumper. *The bonding jumper shall be shall be not smaller than 6 AWG copper wire or equivalent.*

2411.1.1.3Bonding jumper length. *The length of the bonding jumper between the connection to a gas piping system and the connection to a grounding electrode system shall not exceed 75 feet (22 860 mm). Any additional grounding electrode used shall be bonded to the electrical service grounding electrode system or, where provided, the lightning protection grounding electrode system.*

2411.1.1.4 Bonding connections. *Bonding connections shall be in accordance with NFPA 70.*

2411.1.1.5 Connection devices. *Devices used for making the bonding connections shall be listed for the application in accordance with UL 467.*

TABLE 2409.2[a through k]
REDUCTION OF CLEARANCES WITH SPECIFIED FORMS OF PROTECTION

TYPE OF PROTECTION APPLIED TO AND COVERING ALL SURFACES OF COMBUSTIBLE MATERIAL WITHIN THE DISTANCE SPECIFIED AS THE REQUIRED CLEARANCE WITH NO PROTECTION [see Figures 2409.2(1), 2409.2(2), and 2409.2(3)]	WHERE THE REQUIRED CLEARANCE WITH NO PROTECTION FROM APPLIANCE, VENT CONNECTOR, OR SINGLE-WALL METAL PIPE IS: (inches)									
	36		18		12		9		6	
	Allowable clearances with specified protection (inches)									
	Use Column 1 for clearances above appliance or horizontal connector. Use Column 2 for clearances from appliance, vertical connector and single-wall metal pipe.									
	Above Col. 1	Sides and rear Col. 2	Above Col. 1	Sides and rear Col. 2	Above Col. 1	Sides and rear Col. 2	Above Col. 1	Sides and rear Col. 2	Above Col. 1	Sides and rear Col. 2
1. 3½-inch-thick masonry wall without ventilated airspace	—	24	—	12	—	9	—	6	—	5
2. ½-inch insulation board over 1-inch glass fiber or mineral wool batts	24	18	12	9	9	6	6	5	4	3

3. 0.024-inch (nominal 24 gage) sheet metal over 1-inch glass fiber or mineral wool batts reinforced with wire on rear face with ventilated airspace	18	12	9	6	6	4	5	3	3	3
4. 3½-inch-thick masonry wall with ventilated airspace	—	12	—	6	—	6	—	6	—	6
5. 0.024-inch (nominal 24 gage) sheet metal with ventilated airspace	18	12	9	6	6	4	5	3	3	2
6. ½-inch-thick insulation board with ventilated airspace	18	12	9	6	6	4	5	3	3	3
7. 0.024-inch (nominal 24 gage) sheet metal with ventilated airspace over 0.024-inch (nominal 24 gage) sheet metal with ventilated airspace	18	12	9	6	6	4	5	3	3	3
8. 1-inch glass fiber or mineral wool batts sandwiched between two sheets 0.024-inch (nominal 24 gage) sheet metal with ventilated airspace	18	12	9	6	6	4	5	3	3	3

For SI: 1 inch = 25.4 mm, °C = [(°F - 32)/1.8], 1 pound per cubic foot = 16.02 kg/m^3, 1 Btu per inch per square foot per hour per °F = 0.144 W/m^2 ··K.

a. Reduction of clearances from combustible materials shall not interfere with combustion air, draft hood clearance and relief, and accessibility of servicing.

b. All clearances shall be measured from the outer surface of the combustible material to the nearest point on the surface of the appliance, disregarding any intervening protection applied to the combustible material.

c. Spacers and ties shall be of noncombustible material. No spacer or tie shall be used directly opposite an appliance or connector.

d. For all clearance reduction systems using a ventilated airspace, adequate provision for air circulation shall be provided as described [see Figures 2409.2(2) and 2409.2(3)].

e. There shall be at least 1 inch between clearance reduction systems and combustible walls and ceilings for reduction systems using ventilated airspace.

f. Where a wall protector is mounted on a single flat wall away from corners, it shall have a minimum 1-inch air gap. To provide air circulation, the bottom and top edges, or only the side and top edges, or all edges shall be left open.

g. Mineral wool batts (blanket or board) shall have a minimum density of 8 pounds per cubic foot and a minimum melting point of 1500°F.

h. Insulation material used as part of a clearance reduction system shall have a thermal conductivity of 1.0 Btu per inch per square foot per hour per °F or less.

i. There shall be at least 1 inch between the appliance and the protector. In no case shall the clearance between the appliance and the combustible surface be reduced below that allowed in this table.

j. All clearances and thicknesses are minimum; larger clearances and thicknesses are acceptable.

k. Listed single-wall connectors shall be installed in accordance with the manufacturer's installation instructions.

SECTION 2412
GENERAL

2412.1 Scope. This section shall govern the design, installation, modification and maintenance of piping systems. The applicability of this code to piping systems extends from the point of delivery to the connections with the appliances and

includes the design, materials, components, fabrication, assembly, installation, testing, inspection, operation and maintenance of such piping systems.

2412.1.1 Utility piping systems located within buildings. Utility service piping located within buildings shall be installed in accordance with the structural safety and fire protection provisions of this code.

2412.2 Liquefied petroleum gas storage. The storage system for liquefied petroleum gas shall be designed and installed in accordance with the *fire code* and NFPA 58.

2412.3 Modifications to existing systems. In modifying or adding to existing piping systems, sizes shall be maintained in accordance with this chapter.

2412.4 Additional appliances. Where an additional appliance is to be served, the existing piping shall be checked to determine if it has adequate capacity for all appliances served. If inadequate, the existing system shall be enlarged as required or separate piping of adequate capacity shall be provided.

2412.5 Identification. For other than steel pipe, exposed piping shall be identified by a yellow label marked “Gas” in black letters. The marking shall be spaced at intervals not exceeding 5 feet (1524 mm). The marking shall not be required on pipe located in the same room as the appliance served.

2412.6 Interconnections. Where two or more meters are installed on the same premises, but supply separate consumers, the piping systems shall not be interconnected on the outlet side of the meters.

2412.7 Piping meter identification. Piping from multiple meter installations shall be marked with an approved permanent identification by the installer so that the piping system supplied by each meter is readily identifiable.

2412.8 Minimum sizes. All pipe utilized for the installation, extension and alteration of any piping system shall be sized to supply the full number of outlets for the intended purpose and shall be sized in accordance with Section 2413.

SECTION 2413
PIPE SIZING

2413.1 General considerations. Piping systems shall be of such size and so installed as to provide a supply of gas sufficient to meet the maximum demand

and supply gas to each appliance inlet at not less than the minimum supply pressure required by the appliance.

2413.2 Maximum gas demand. The volume of gas to be provided, in cubic feet per hour, shall be determined directly from the manufacturer's input ratings of the appliances served. Where an input rating is not indicated, the gas supplier, appliance manufacturer or a qualified agency shall be contacted, or the rating from Table 2413.2 shall be used for estimating the volume of gas to be supplied.

The total connected hourly load shall be used as the basis for pipe sizing, assuming that all appliances could be operating at full capacity simultaneously. Where a diversity of load can be established, pipe sizing shall be permitted to be based on such loads.

TABLE 2413.2
APPROXIMATE GAS INPUT FOR TYPICAL APPLIANCES

APPLIANCE	INPUT BTU/H (Approx.)
Space Heating Units	
Hydronic boiler	
Single family	100,000
Multifamily, per unit	60,000
Warm-air furnace	
Single family	100,000
Multifamily, per unit	60,000
Space and Water Heating Units	
Hydronic boiler	
Single family	120,000
Multifamily, per unit	75,000
Water Heating Appliances	
Water heater, automatic instantaneous	142,800
Capacity at 2 gal./minute	285,000
Capacity at 4 gal./minute	428,400
Capacity at 6 gal./minute	
Water heater, automatic storage, 30- to 40-gal. tank	35,000
Water heater, automatic storage, 50-gal. tank	50,000
Water heater, domestic, circulating or side-arm	35,000
Cooking Appliances	
Built-in oven or broiler unit, domestic	25,000
Built-in top unit, domestic	40,000
Range, free-standing, domestic	65,000
Other Appliances	
Barbecue	40,000
Clothes dryer, Type 1 (domestic)	35,000
Gas fireplace, direct-vent	40,000
Gas light	2,500
Gas log	80,000
Refrigerator	3,000

For SI: 1 British thermal unit per hour = 0.293 W, 1 gallon = 3.785 L, 1 gallon per minute = 3.785 L/m.

2413.3 Sizing. Gas piping shall be sized in accordance with one of the following:

1. Pipe sizing tables or sizing equations in accordance with Section 2413.4.

2. The sizing tables included in a listed piping system's manufacturer's installation instructions.

3. Other approved engineering methods.

2413.4 Sizing tables and equations. Where Tables 2413.4(1) through 2413.4(21) are used to size piping or tubing, the pipe length shall be determined in accordance with Section 2413.4.1, 2413.4.2 or 2413.4.3.

Where Equations 24-3 and 24-4 are used to size piping or tubing, the pipe or tubing shall have smooth inside walls and the pipe length shall be determined in accordance with Section 2413.4.1, 2413.4.2 or 2413.4.3.

1. Low-pressure gas equation [Less than 1.5 pounds per square inch (psi) (10.3 kPa)]:

$$D = \frac{Q^{0.381}}{19.17\left(\frac{\Delta H}{C_r x L}\right)^{0.206}} \qquad \textbf{(Equation 24-3)}$$

2. High-pressure gas equation [1.5 psi (10.3 kPa) and above]:

$$D = \frac{Q^{0.381}}{18.93\left(\frac{\left(P_1^2 - P_2^2\right)xY}{C_r x L}\right)^{0.206}} \qquad \textbf{(Equation 24-4)}$$

where:

D	=	Inside diameter of pipe, inches (mm).
Q	=	Input rate appliance(s), cubic feet per hour at 60°F (16°C) and 30-inch mercury column.
P_1	=	Upstream pressure, psia (P1 + 14.7).
P_2	=	Downstream pressure, psia (P2 + 14.7).
L	=	Equivalent length of pipe, feet.

$\triangle H$ = Pressure drop, inch water column (27.7 inch water column = 1 psi).

TABLE 2413.4
C_r AND Y VALUES FOR NATURAL GAS AND UNDILUTED PROPANE AT STANDARD CONDITIONS

GAS	EQUATION FACTORS	
	C_r	Y
Natural gas	0.6094	0.9992
Undiluted propane	1.2462	0.9910

For SI: 1 cubic foot = 0.028 m^3, 1 foot = 305 mm, 1 inch water column = 0.249 kPa, 1 pound per square inch = 6.895 kPa, 1 British thermal unit per hour = 0.293 W.

2413.4.1 Longest length method. The pipe size of each section of gas piping shall be determined using the longest length of piping from the point of delivery to the most remote outlet and the load of the section.

2413.4.2 Branch length method. Pipe shall be sized as follows:

1. Pipe size of each section of the longest pipe run from the point of delivery to the most remote outlet shall be determined using the longest run of piping and the load of the section.

2. The pipe size of each section of branch piping not previously sized shall be determined using the length of piping from the point of delivery to the most remote outlet in each branch and the load of the section.

2413.4.3 Hybrid pressure. The pipe size for each section of higher pressure gas piping shall be determined using the longest length of piping from the point of delivery to the most remote line pressure regulator. The pipe size from the line pressure regulator to each outlet shall be determined using the length of piping from the regulator to the most remote outlet served by the regulator.

2413.5 Allowable pressure drop. The design pressure loss in any piping system under maximum probable flow conditions, from the point of delivery to the inlet connection of the appliance, shall be such that the supply pressure at the appliance is greater than or equal to the minimum pressure required by the appliance.

2413.6 Maximum design operating pressure. The maximum design operating pressure for piping systems located inside buildings shall not exceed 5 pounds per square inch gauge (psig) (34 kPa gauge) except where one or more of the following conditions are met:

1. The piping system is welded.

2. The piping is located in a ventilated chase or otherwise enclosed for protection against accidental gas accumulation.

3. The piping is a temporary installation for buildings under construction.

2413.6.1 Liquefied petroleum gas systems. LP-gas systems designed to operate below -5°F (-21°C) or with butane or a propane-butane mix shall be designed to either accommodate liquid LP-gas or prevent LP-gas vapor from condensing into a liquid.

TABLE 2413.4(1)
SCHEDULE 40 METALLIC PIPE

Gas	Natural
Inlet Pressure	Less than 2 psi
Pressure Drop	0.5 in. w.c.
Specific Gravity	0.60

PIPE SIZE (inch)														
Nominal	½	¾	1	1¼	11/2	2	2½	3	4	5	6	8	10	12
Actual ID	0.622	0.824	1.049	1.380	1.610	2.067	2.469	3.068	4.026	5.047	6.065	7.981	10.020	11.938
Length (ft)	**Capacity in Cubic Feet of Gas per Hour**													
10	172	360	678	1,390	2,090	4,020	6,400	11,300	23,100	41,800	67,600	139,000	252,000	399,000
20	118	247	466	957	1,430	2,760	4,400	7,780	15,900	28,700	46,500	95,500	173,000	275,000
30	95	199	374	768	1,150	2,220	3,530	6,250	12,700	23,000	37,300	76,700	139,000	220,000
40	81	170	320	657	985	1,900	3,020	5,350	10,900	19,700	31,900	65,600	119,000	189,000
50	72	151	284	583	873	1,680	2,680	4,740	9,660	17,500	28,300	58,200	106,000	167,000
60	65	137	257	528	791	1,520	2,430	4,290	8,760	15,800	25,600	52,700	95,700	152,000
70	60	126	237	486	728	1,400	2,230	3,950	8,050	14,600	23,600	48,500	88,100	139,000
80	56	117	220	452	677	1,300	2,080	3,670	7,490	13,600	22,000	45,100	81,900	130,000
90	52	110	207	424	635	1,220	1,950	3,450	7,030	12,700	20,600	42,300	76,900	122,000
100	50	104	195	400	600	1,160	1,840	3,260	6,640	12,000	19,500	40,000	72,600	115,000
125	44	92	173	355	532	1,020	1,630	2,890	5,890	10,600	17,200	35,400	64,300	102,000

150	40	83	157	322	482	928	1,480	2,610	5,330	9,650	15,600	32,100	58,300	92,300
175	37	77	144	296	443	854	1,360	2,410	4,910	8,880	14,400	29,500	53,600	84,900
200	34	71	134	275	412	794	1,270	2,240	4,560	8,260	13,400	27,500	49,900	79,000
250	30	63	119	244	366	704	1,120	1,980	4,050	7,320	11,900	24,300	44,200	70,000
300	27	57	108	221	331	638	1,020	1,800	3,670	6,630	10,700	22,100	40,100	63,400
350	25	53	99	203	305	587	935	1,650	3,370	6,100	9,880	20,300	36,900	58,400
400	23	49	92	189	283	546	870	1,540	3,140	5,680	9,190	18,900	34,300	54,300
450	22	46	86	177	266	512	816	1,440	2,940	5,330	8,620	17,700	32,200	50,900
500	21	43	82	168	251	484	771	1,360	2,780	5,030	8,150	16,700	30,400	48,100
550	20	41	78	159	239	459	732	1,290	2,640	4,780	7,740	15,900	28,900	45,700
600	19	39	74	152	228	438	699	1,240	2,520	4,560	7,380	15,200	27,500	43,600
650	18	38	71	145	218	420	669	1,180	2,410	4,360	7,070	14,500	26,400	41,800
700	17	36	68	140	209	403	643	1,140	2,320	4,190	6,790	14,000	25,300	40,100
750	17	35	66	135	202	389	619	1,090	2,230	4,040	6,540	13,400	24,400	38,600
800	16	34	63	130	195	375	598	1,060	2,160	3,900	6,320	13,000	23,600	37,300
850	16	33	61	126	189	363	579	1,020	2,090	3,780	6,110	12,600	22,800	36,100
900	15	32	59	122	183	352	561	992	2,020	3,660	5,930	12,200	22,100	35,000
950	15	31	58	118	178	342	545	963	1,960	3,550	5,760	11,800	21,500	34,000
1,000	14	30	56	115	173	333	530	937	1,910	3,460	5,600	11,500	20,900	33,100
1,100	14	28	53	109	164	316	503	890	1,810	3,280	5,320	10,900	19,800	31,400
1,200	13	27	51	104	156	301	480	849	1,730	3,130	5,070	10,400	18,900	30,000
1,300	12	26	49	100	150	289	460	813	1,660	3,000	4,860	9,980	18,100	28,700
1,400	12	25	47	96	144	277	442	781	1,590	2,880	4,670	9,590	17,400	27,600
1,500	11	24	45	93	139	267	426	752	1,530	2,780	4,500	9,240	16,800	26,600
1,600	11	23	44	89	134	258	411	727	1,480	2,680	4,340	8,920	16,200	25,600
1,700	11	22	42	86	130	250	398	703	1,430	2,590	4,200	8,630	15,700	24,800
1,800	10	22	41	84	126	242	386	682	1,390	2,520	4,070	8,370	15,200	24,100
1,900	10	21	40	81	122	235	375	662	1,350	2,440	3,960	8,130	14,800	23,400
2,000	NA	20	39	79	119	229	364	644	1,310	2,380	3,850	7,910	14,400	22,700

For SI: 1 inch = 25.4 mm, 1 foot = 304.8 mm, 1 pound per square inch = 6.895 kPa, 1-inch water column = 0.2488 kPa, 1 British thermal unit per hour = 0.2931 W, 1 cubic foot per hour = 0.0283 m^3/h, 1 degree = 0.01745 rad.

Notes:

1 NA means a flow of less than 10 cfh.

2 All table entries have been rounded to three significant digits.

TABLE 2413.4(2)
SCHEDULE 40 METALLIC PIPE

Gas	Natural
Inlet Pressure	2.0 psi
Pressure Drop	1.0 psi
Specific Gravity	0.60

PIPE SIZE (inch)									
Nominal	½	¾	1	1¼	1½	2	2½	3	4

Actual ID	0.622	0.824	1.049	1.380	1.610	2.067	2.469	3.068	4.026
Length (ft)	**Capacity in Cubic Feet of Gas per Hour**								
10	1,510	3,040	5,560	11,400	17,100	32,900	52,500	92,800	189,000
20	1,070	2,150	3,930	8,070	12,100	23,300	37,100	65,600	134,000
30	869	1,760	3,210	6,590	9,880	19,000	30,300	53,600	109,000
40	753	1,520	2,780	5,710	8,550	16,500	26,300	46,400	94,700
50	673	1,360	2,490	5,110	7,650	14,700	23,500	41,500	84,700
60	615	1,240	2,270	4,660	6,980	13,500	21,400	37,900	77,300
70	569	1,150	2,100	4,320	6,470	12,500	19,900	35,100	71,600
80	532	1,080	1,970	4,040	6,050	11,700	18,600	32,800	67,000
90	502	1,010	1,850	3,810	5,700	11,000	17,500	30,900	63,100
100	462	934	1,710	3,510	5,260	10,100	16,100	28,500	58,200
125	414	836	1,530	3,140	4,700	9,060	14,400	25,500	52,100
150	372	751	1,370	2,820	4,220	8,130	13,000	22,900	46,700
175	344	695	1,270	2,601	3,910	7,530	12,000	21,200	43,300
200	318	642	1,170	2,410	3,610	6,960	11,100	19,600	40,000
250	279	583	1,040	2,140	3,210	6,180	9,850	17,400	35,500
300	253	528	945	1,940	2,910	5,600	8,920	15,800	32,200
350	232	486	869	1,790	2,670	5,150	8,210	14,500	29,600
400	216	452	809	1,660	2,490	4,790	7,640	13,500	27,500
450	203	424	759	1,560	2,330	4,500	7,170	12,700	25,800
500	192	401	717	1,470	2,210	4,250	6,770	12,000	24,400
550	182	381	681	1,400	2,090	4,030	6,430	11,400	23,200
600	174	363	650	1,330	2,000	3,850	6,130	10,800	22,100
650	166	348	622	1,280	1,910	3,680	5,870	10,400	21,200
700	160	334	598	1,230	1,840	3,540	5,640	9,970	20,300
750	154	322	576	1,180	1,770	3,410	5,440	9,610	19,600
800	149	311	556	1,140	1,710	3,290	5,250	9,280	18,900
850	144	301	538	1,100	1,650	3,190	5,080	8,980	18,300
900	139	292	522	1,070	1,600	3,090	4,930	8,710	17,800
950	135	283	507	1,040	1,560	3,000	4,780	8,460	17,200
1,000	132	275	493	1,010	1,520	2,920	4,650	8,220	16,800
1,100	125	262	468	960	1,440	2,770	4,420	7,810	15,900
1,200	119	250	446	917	1,370	2,640	4,220	7,450	15,200
1,300	114	239	427	878	1,320	2,530	4,040	7,140	14,600
1,400	110	230	411	843	1,260	2,430	3,880	6,860	14,000
1,500	106	221	396	812	1,220	2,340	3,740	6,600	13,500
1,600	102	214	382	784	1,180	2,260	3,610	6,380	13,000
1,700	99	207	370	759	1,140	2,190	3,490	6,170	12,600
1,800	96	200	358	736	1,100	2,120	3,390	5,980	12,200
1,900	93	195	348	715	1,070	2,060	3,290	5,810	11,900
2,000	91	189	339	695	1,040	2,010	3,200	5,650	11,500

For SI: 1 inch = 25.4 mm, 1 foot = 304.8 mm, 1 pound per square inch = 6.895 kPa, 1-inch water column = 0.2488 kPa, 1 British thermal unit per hour = 0.2931 W, 1 cubic foot per hour = 0.0283 m^3/h, 1 degree = 0.01745 rad.
Note: All table entries have been rounded to three significant digits.

TABLE 2413.4(3)
SEMIRIGID COPPER TUBING

Gas	Natural
Inlet Pressure	Less than 2 psi
Pressure Drop	0.5 in. w.c.
Specific Gravity	0.60

TUBE SIZE (inch)										
Nominal	**K & L**	¼	$^3/_8$	½	$^5/_8$	¾	1	1¼	1½	2
	ACR	$^3/_8$	½	$^5/_8$	¾	$^7/_8$	$1^1/_8$	$1^3/_8$	—	—
Outside		0.375	0.500	0.625	0.750	0.875	1.125	1.375	1.625	2.125
Inside		0.305	0.402	0.527	0.652	0.745	0.995	1.245	1.481	1.959
Length (ft)		**Capacity in Cubic Feet of Gas per Hour**								
10		27	55	111	195	276	590	1,060	1,680	3,490
20		18	38	77	134	190	406	730	1,150	2,400
30		15	30	61	107	152	326	586	925	1,930
40		13	26	53	92	131	279	502	791	1,650
50		11	23	47	82	116	247	445	701	1,460
60		10	21	42	74	105	224	403	635	1,320
70		NA	19	39	68	96	206	371	585	1,220
80		NA	18	36	63	90	192	345	544	1,130
90		NA	17	34	59	84	180	324	510	1,060
100		NA	16	32	56	79	170	306	482	1,000
125		NA	14	28	50	70	151	271	427	890
150		NA	13	26	45	64	136	245	387	806
175		NA	12	24	41	59	125	226	356	742
200		NA	11	22	39	55	117	210	331	690
250		NA	NA	20	34	48	103	186	294	612
300		NA	NA	18	31	44	94	169	266	554
350		NA	NA	16	28	40	86	155	245	510
400		NA	NA	15	26	38	80	144	228	474
450		NA	NA	14	25	35	75	135	214	445
500		NA	NA	13	23	33	71	128	202	420
550		NA	NA	13	22	32	68	122	192	399
600		NA	NA	12	21	30	64	116	183	381
650		NA	NA	12	20	29	62	111	175	365
700		NA	NA	11	20	28	59	107	168	350
750		NA	NA	11	19	27	57	103	162	338
800		NA	NA	10	18	26	55	99	156	326
850		NA	NA	10	18	25	53	96	151	315

900	NA	NA	NA	17	24	52	93	147	306
950	NA	NA	NA	17	24	50	90	143	297
1,000	NA	NA	NA	16	23	49	88	139	289
1,100	NA	NA	NA	15	22	46	84	132	274
1,200	NA	NA	NA	15	21	44	80	126	262
1,300	NA	NA	NA	14	20	42	76	120	251
1,400	NA	NA	NA	13	19	41	73	116	241
1,500	NA	NA	NA	13	18	39	71	111	232
1,600	NA	NA	NA	13	18	38	68	108	224
1,700	NA	NA	NA	12	17	37	66	104	217
1,800	NA	NA	NA	12	17	36	64	101	210
1,900	NA	NA	NA	11	16	35	62	98	204
2,000	NA	NA	NA	11	16	34	60	95	199

For SI: 1 inch = 25.4 mm, 1 foot = 304.8 mm, 1 pound per square inch = 6.895 kPa, 1-inch water column = 0.2488 kPa, 1 British thermal unit per hour = 0.2931 W, 1 cubic foot per hour = 0.0283 m^3/h, 1 degree = 0.01745 rad.

Notes:

1 Table capacities are based on Type K copper tubing inside diameter (shown), which has the smallest inside diameter of the copper tubing products.

2 NA means a flow of less than 10 cfh.

3 All table entries have been rounded to three significant digits.

TABLE 2413.4(4)
SEMIRIGID COPPER TUBING

Gas	Natural
Inlet Pressure	2.0 psi
Pressure Drop	1.0 psi
Specific Gravity	0.60

TUBE SIZE (inch)										
Nominal	**K & L**	¼	$^3/_8$	½	$^5/_8$	¾	1	1¼	1½	2
	ACR	$^3/_8$	½	$^5/_8$	¾	$^7/_8$	$1^1/_8$	$1^3/_8$	—	—
Outside		0.375	0.500	0.625	0.750	0.875	1.125	1.375	1.625	2.125
Inside		0.305	0.402	0.527	0.652	0.745	0.995	1.245	1.481	1.959
Length (ft)		**Capacity in Cubic Feet of Gas per Hour**								
10		245	506	1,030	1,800	2,550	5,450	9,820	15,500	32,200
20		169	348	708	1,240	1,760	3,750	6,750	10,600	22,200
30		135	279	568	993	1,410	3,010	5,420	8,550	17,800
40		116	239	486	850	1,210	2,580	4,640	7,310	15,200
50		103	212	431	754	1,070	2,280	4,110	6,480	13,500
60		93	192	391	683	969	2,070	3,730	5,870	12,200
70		86	177	359	628	891	1,900	3,430	5,400	11,300
80		80	164	334	584	829	1,770	3,190	5,030	10,500
90		75	154	314	548	778	1,660	2,990	4,720	9,820
100		71	146	296	518	735	1,570	2,830	4,450	9,280

125	63	129	263	459	651	1,390	2,500	3,950	8,220
150	57	117	238	416	590	1,260	2,270	3,580	7,450
175	52	108	219	383	543	1,160	2,090	3,290	6,850
200	49	100	204	356	505	1,080	1,940	3,060	6,380
250	43	89	181	315	448	956	1,720	2,710	5,650
300	39	80	164	286	406	866	1,560	2,460	5,120
350	36	74	150	263	373	797	1,430	2,260	4,710
400	33	69	140	245	347	741	1,330	2,100	4,380
450	31	65	131	230	326	696	1,250	1,970	4,110
500	30	61	124	217	308	657	1,180	1,870	3,880
550	28	58	118	206	292	624	1,120	1,770	3,690
600	27	55	112	196	279	595	1,070	1,690	3,520
650	26	53	108	188	267	570	1,030	1,620	3,370
700	25	51	103	181	256	548	986	1,550	3,240
750	24	49	100	174	247	528	950	1,500	3,120
800	23	47	96	168	239	510	917	1,450	3,010
850	22	46	93	163	231	493	888	1,400	2,920
900	22	44	90	158	224	478	861	1,360	2,830
950	21	43	88	153	217	464	836	1,320	2,740
1,000	20	42	85	149	211	452	813	1,280	2,670
1,100	19	40	81	142	201	429	772	1,220	2,540
1,200	18	38	77	135	192	409	737	1,160	2,420
1,300	18	36	74	129	183	392	705	1,110	2,320
1,400	17	35	71	124	176	376	678	1,070	2,230
1,500	16	34	68	120	170	363	653	1,030	2,140
1,600	16	33	66	116	164	350	630	994	2,070
1,700	15	31	64	112	159	339	610	962	2,000
1,800	15	30	62	108	154	329	592	933	1,940
1,900	14	30	60	105	149	319	575	906	1,890
2,000	14	29	59	102	145	310	559	881	1,830

For SI: 1 inch = 25.4 mm, 1 foot = 304.8 mm, 1 pound per square inch = 6.895 kPa, 1-inch water column = 0.2488 kPa, 1 British thermal unit per hour = 0.2931 W, 1 cubic foot per hour = 0.0283 m^3/h, 1 degree = 0.01745 rad.

Notes:

1 Table capacities are based on Type K copper tubing inside diameter (shown), which has the smallest inside diameter of the copper tubing products.

2 All table entries have been rounded to three significant digits.

TABLE 2413.4(5)
CORRUGATED STAINLESS STEEL TUBING (CSST)

Gas	Natural
Inlet Pressure	Less than 2 psi
Pressure Drop	0.5 in. w.c.
Specific Gravity	0.60

TUBE SIZE (EHD)

Flow Designation	13	15	18	19	23	25	30	31	37	39	46	48	60	62
Length (ft)	**Capacity in Cubic Feet of Gas per Hour**													
5	46	63	115	134	225	270	471	546	895	1,037	1,790	2,070	3,660	4,140
10	32	44	82	95	161	192	330	383	639	746	1,260	1,470	2,600	2,930
15	25	35	66	77	132	157	267	310	524	615	1,030	1,200	2,140	2,400
20	22	31	58	67	116	137	231	269	456	536	888	1,050	1,850	2,080
25	19	27	52	60	104	122	206	240	409	482	793	936	1,660	1,860
30	18	25	47	55	96	112	188	218	374	442	723	856	1,520	1,700
40	15	21	41	47	83	97	162	188	325	386	625	742	1,320	1,470
50	13	19	37	42	75	87	144	168	292	347	559	665	1,180	1,320
60	12	17	34	38	68	80	131	153	267	318	509	608	1,080	1,200
70	11	16	31	36	63	74	121	141	248	295	471	563	1,000	1,110
80	10	15	29	33	60	69	113	132	232	277	440	527	940	1,040
90	10	14	28	32	57	65	107	125	219	262	415	498	887	983
100	9	13	26	30	54	62	101	118	208	249	393	472	843	933
150	7	10	20	23	42	48	78	91	171	205	320	387	691	762
200	6	9	18	21	38	44	71	82	148	179	277	336	600	661
250	5	8	16	19	34	39	63	74	133	161	247	301	538	591
300	5	7	15	17	32	36	57	67	95	148	226	275	492	540

For SI: 1 inch = 25.4 mm, 1 foot = 304.8 mm, 1 pound per square inch = 6.895kPa, 1-inch water column = 0.2488 kPa, 1 British thermal unit per hour = 0.2931 W, 1 cubic foot per hour = 0.0283 m^3/h, 1 degree = 0.01745 rad.

Notes:

1 Table includes losses for four 90-degree bends and two end fittings. Tubing runs with larger numbers of bends and/or fittings shall be increased by an equivalent length of tubing to the following equation: L = 1.3*n*, where L is additional length (feet) of tubing and n is the number of additional fittings and/or bends.

2 EHD—Equivalent Hydraulic Diameter, which is a measure of the relative hydraulic efficiency between different tubing sizes. The greater the value of EHD, the greater the gas capacity of the tubing.

3 All table entries have been rounded to three significant digits.

TABLE 2413.4(6)
CORRUGATED STAINLESS STEEL TUBING (CSST)

Gas	Natural
Inlet Pressure	2.0 psi
Pressure Drop	1.0 psi
Specific Gravity	0.60

TUBE SIZE (EHD)														
Flow Designation	13	15	18	19	23	25	30	31	37	39	46	48	60	62
Length (ft)	**Capacity in Cubic Feet of Gas Per Hour**													
10	270	353	587	700	1,100	1,370	2,590	2,990	4,510	5,037	9,600	10,700	18,600	21,600

25	166	220	374	444	709	876	1,620	1,870	2,890	3,258	6,040	6,780	11,900	13,700
30	151	200	342	405	650	801	1,480	1,700	2,640	2,987	5,510	6,200	10,900	12,500
40	129	172	297	351	567	696	1,270	1,470	2,300	2,605	4,760	5,380	9,440	10,900
50	115	154	266	314	510	624	1,140	1,310	2,060	2,343	4,260	4,820	8,470	9,720
75	93	124	218	257	420	512	922	1,070	1,690	1,932	3,470	3,950	6,940	7,940
80	89	120	211	249	407	496	892	1,030	1,640	1,874	3,360	3,820	6,730	7,690
100	79	107	189	222	366	445	795	920	1,470	1,685	3,000	3,420	6,030	6,880
150	64	87	155	182	302	364	646	748	1,210	1,389	2,440	2,800	4,940	5,620
200	55	75	135	157	263	317	557	645	1,050	1,212	2,110	2,430	4,290	4,870
250	49	67	121	141	236	284	497	576	941	1,090	1,890	2,180	3,850	4,360
300	44	61	110	129	217	260	453	525	862	999	1,720	1,990	3,520	3,980
400	38	52	96	111	189	225	390	453	749	871	1,490	1,730	3,060	3,450
500	34	46	86	100	170	202	348	404	552	783	1,330	1,550	2,740	3,090

For SI: 1 inch = 25.4 mm, 1 foot = 304.8 mm, 1 pound per square inch = 6.895kPa, 1-inch water column = 0.2488 kPa, 1 British thermal unit per hour = 0.2931 W, 1 cubic foot per hour = 0.0283 m^3/h, 1 degree = 0.01745 rad.

Notes:

1 Table does not include effect of pressure drop across the line regulator. Where regulator loss exceeds ¾ psi, DO NOT USE THIS TABLE. Consult with the regulator manufacturer for pressure drops and capacity factors. Pressure drops across a regulator can vary with flow rate.

2 CAUTION: Capacities shown in the table might exceed maximum capacity for a selected regulator. Consult with the regulator or tubing manufacturer for guidance.

3 Table includes losses for four 90-degree bends and two end fittings. Tubing runs with larger numbers of bends and/or fittings shall be increased by an equivalent length of tubing to the following equation: L = 1.3n where L is additional length (feet) of tubing and n is the number of additional fittings and/or bends.

4 EHD—Equivalent Hydraulic Diameter, which is a measure of the relative hydraulic efficiency between different tubing sizes. The greater the value of EHD, the greater the gas capacity of the tubing.

5 All table entries have been rounded to three significant digits.

TABLE 2413.4(7)
POLYETHYLENE PLASTIC PIPE

Gas	Natural
Inlet Pressure	Less than 2 psi
Pressure Drop	0.5 in. w.c.
Specific Gravity	0.60

PIPE SIZE (in.)						
Nominal OD	½	¾	1	1¼	1½	2
Designation	SDR 9.33	SDR 11.0	SDR 11.00	SDR 10.00	SDR 11.00	SDR 11.00
Actual ID	0.660	0.860	1.077	1.328	1.554	1.943
Length (ft)	**Capacity in Cubic Feet of Gas per Hour**					
10	201	403	726	1,260	1,900	3,410
20	138	277	499	865	1,310	2,350
30	111	222	401	695	1,050	1,880

40	95	190	343	594	898	1,610
50	84	169	304	527	796	1,430
60	76	153	276	477	721	1,300
70	70	140	254	439	663	1,190
80	65	131	236	409	617	1,110
90	61	123	221	383	579	1,040
100	58	116	209	362	547	983
125	51	103	185	321	485	871
150	46	93	168	291	439	789
175	43	86	154	268	404	726
200	40	80	144	249	376	675
250	35	71	127	221	333	598
300	32	64	115	200	302	542
350	29	59	106	184	278	499
400	27	55	99	171	258	464
450	26	51	93	160	242	435
500	24	48	88	152	229	411

For SI: 1 inch = 25.4 mm, 1 foot = 304.8 mm, 1 pound per square inch = 6.895kPa, 1-inch water column = 0.2488 kPa, 1 British thermal unit per hour = 0.2931 W, 1 cubic foot per hour = 0.0283 m^3/h, 1 degree = 0.01745 rad.
Note: All table entries have been rounded to three significant digits.

TABLE 2413.4(8)
POLYETHYLENE PLASTIC PIPE

Gas	Natural
Inlet Pressure	2.0 psi
Pressure Drop	1.0 psi
Specific Gravity	0.60

PIPE SIZE (in.)						
Nominal OD	½	¾	1	1¼	1½	2
Designation	SDR 9.33	SDR 11.0	SDR 11.00	SDR 10.00	SDR 11.00	SDR 11.00
Actual ID	0.660	0.860	1.077	1.328	1.554	1.943
Length (ft)	**Capacity in Cubic Feet of Gas per Hour**					
10	1,860	3,720	6,710	11,600	17,600	31,600
20	1,280	2,560	4,610	7,990	12,100	21,700
30	1,030	2,050	3,710	6,420	9,690	17,400
40	878	1,760	3,170	5,490	8,300	14,900
50	778	1,560	2,810	4,870	7,350	13,200
60	705	1,410	2,550	4,410	6,660	12,000
70	649	1,300	2,340	4,060	6,130	11,000
80	603	1,210	2,180	3,780	5,700	10,200

90	566	1,130	2,050	3,540	5,350	9,610
100	535	1,070	1,930	3,350	5,050	9,080
125	474	949	1,710	2,970	4,480	8,050
150	429	860	1,550	2,690	4,060	7,290
175	395	791	1,430	2,470	3,730	6,710
200	368	736	1,330	2,300	3,470	6,240
250	326	652	1,180	2,040	3,080	5,530
300	295	591	1,070	1,850	2,790	5,010
350	272	544	981	1,700	2,570	4,610
400	253	506	913	1,580	2,390	4,290
450	237	475	856	1,480	2,240	4,020
500	224	448	809	1,400	2,120	3,800
550	213	426	768	1,330	2,010	3,610
600	203	406	733	1,270	1,920	3,440
650	194	389	702	1,220	1,840	3,300
700	187	374	674	1,170	1,760	3,170
750	180	360	649	1,130	1,700	3,050
800	174	348	627	1,090	1,640	2,950
850	168	336	607	1,050	1,590	2,850
900	163	326	588	1,020	1,540	2,770
950	158	317	572	990	1,500	2,690
1,000	154	308	556	963	1,450	2,610
1,100	146	293	528	915	1,380	2,480
1,200	139	279	504	873	1,320	2,370
1,300	134	267	482	836	1,260	2,270
1,400	128	257	463	803	1,210	2,180
1,500	124	247	446	773	1,170	2,100
1,600	119	239	431	747	1,130	2,030
1,700	115	231	417	723	1,090	1,960
1,800	112	224	404	701	1,060	1,900
1,900	109	218	393	680	1,030	1,850
2,000	106	212	382	662	1,000	1,800

For SI: 1 inch = 25.4 mm, 1 foot = 304.8 mm, 1 pound per square inch = 6.895 kPa, 1-inch water column = 0.2488 kPa, 1 British thermal unit per hour = 0.2931 W, 1 cubic foot per hour = 0.0283 m^3/h, 1 degree = 0.01745 rad.

TABLE 2413.4(9)
SCHEDULE 40 METALLIC PIPE

Gas	Undiluted Propane
Inlet Pressure	10.0 psi
Pressure Drop	1.0 psi
Specific Gravity	1.50

INTENDED USE	Pipe sizing between first stage (high-pressure regulator) and second stage (low-pressure regulator).								
PIPE SIZE (in.)									
Nominal	½	¾	1	1¼	1½	2	2½	3	4
Actual ID	0.622	0.824	1.049	1.380	1.610	2.067	2.469	3.068	4.026
Length (ft)	**Capacity in Thousands of Btu per Hour**								
10	3,320	6,950	13,100	26,900	40,300	77,600	124,000	219,000	446,000
20	2,280	4,780	9,000	18,500	27,700	53,300	85,000	150,000	306,000
30	1,830	3,840	7,220	14,800	22,200	42,800	68,200	121,000	246,000
40	1,570	3,280	6,180	12,700	19,000	36,600	58,400	103,000	211,000
50	1,390	2,910	5,480	11,300	16,900	32,500	51,700	91,500	187,000
60	1,260	2,640	4,970	10,200	15,300	29,400	46,900	82,900	169,000
70	1,160	2,430	4,570	9,380	14,100	27,100	43,100	76,300	156,000
80	1,080	2,260	4,250	8,730	13,100	25,200	40,100	70,900	145,000
90	1,010	2,120	3,990	8,190	12,300	23,600	37,700	66,600	136,000
100	956	2,000	3,770	7,730	11,600	22,300	35,600	62,900	128,000
125	848	1,770	3,340	6,850	10,300	19,800	31,500	55,700	114,000
150	768	1,610	3,020	6,210	9,300	17,900	28,600	50,500	103,000
175	706	1,480	2,780	5,710	8,560	16,500	26,300	46,500	94,700
200	657	1,370	2,590	5,320	7,960	15,300	24,400	43,200	88,100
250	582	1,220	2,290	4,710	7,060	13,600	21,700	38,300	78,100
300	528	1,100	2,080	4,270	6,400	12,300	19,600	34,700	70,800
350	486	1,020	1,910	3,930	5,880	11,300	18,100	31,900	65,100
400	452	945	1,780	3,650	5,470	10,500	16,800	29,700	60,600
450	424	886	1,670	3,430	5,140	9,890	15,800	27,900	56,800
500	400	837	1,580	3,240	4,850	9,340	14,900	26,300	53,700
550	380	795	1,500	3,070	4,610	8,870	14,100	25,000	51,000
600	363	759	1,430	2,930	4,400	8,460	13,500	23,900	48,600
650	347	726	1,370	2,810	4,210	8,110	12,900	22,800	46,600
700	334	698	1,310	2,700	4,040	7,790	12,400	21,900	44,800
750	321	672	1,270	2,600	3,900	7,500	12,000	21,100	43,100
800	310	649	1,220	2,510	3,760	7,240	11,500	20,400	41,600
850	300	628	1,180	2,430	3,640	7,010	11,200	19,800	40,300
900	291	609	1,150	2,360	3,530	6,800	10,800	19,200	39,100
950	283	592	1,110	2,290	3,430	6,600	10,500	18,600	37,900
1,000	275	575	1,080	2,230	3,330	6,420	10,200	18,100	36,900
1,100	261	546	1,030	2,110	3,170	6,100	9,720	17,200	35,000
1,200	249	521	982	2,020	3,020	5,820	9,270	16,400	33,400
1,300	239	499	940	1,930	2,890	5,570	8,880	15,700	32,000
1,400	229	480	903	1,850	2,780	5,350	8,530	15,100	30,800
1,500	221	462	870	1,790	2,680	5,160	8,220	14,500	29,600
1,600	213	446	840	1,730	2,590	4,980	7,940	14,000	28,600
1,700	206	432	813	1,670	2,500	4,820	7,680	13,600	27,700

1,800	200	419	789	1,620	2,430	4,670	7,450	13,200	26,900
1,900	194	407	766	1,570	2,360	4,540	7,230	12,800	26,100
2,000	189	395	745	1,530	2,290	4,410	7,030	12,400	25,400

For SI: 1 inch = 25.4 mm, 1 foot = 304.8 mm, 1 pound per square inch = 6.895 kPa, 1-inch water column = 0.2488 kPa, 1 British thermal unit per hour = 0.2931 W, 1 cubic foot per hour = 0.0283 m^3/h, 1 degree = 0.01745 rad.

Note: All table entries have been rounded to three significant digits.

TABLE 2413.4(10)
SCHEDULE 40 METALLIC PIPE

Gas	Undiluted Propane
Inlet Pressure	10.0 psi
Pressure Drop	3.0 psi
Specific Gravity	1.50

INTENDED USE	**Pipe sizing between first stage (high-pressure regulator) and second stage (low-pressure regulator).**								
PIPE SIZE (in)									
Nominal	½	¾	1	1¼	1½	2	2½	3	4
Actual ID	0.622	0.824	1.049	1.380	1.610	2.067	2.469	3.068	4.026
Length (ft)	**Capacity in Thousands of Btu per Hour**								
10	5,890	12,300	23,200	47,600	71,300	137,000	219,000	387,000	789,000
20	4,050	8,460	15,900	32,700	49,000	94,400	150,000	266,000	543,000
30	3,250	6,790	12,800	26,300	39,400	75,800	121,000	214,000	436,000
40	2,780	5,810	11,000	22,500	33,700	64,900	103,000	183,000	373,000
50	2,460	5,150	9,710	19,900	29,900	57,500	91,600	162,000	330,000
60	2,230	4,670	8,790	18,100	27,100	52,100	83,000	147,000	299,000
70	2,050	4,300	8,090	16,600	24,900	47,900	76,400	135,000	275,000
80	1,910	4,000	7,530	15,500	23,200	44,600	71,100	126,000	256,000
90	1,790	3,750	7,060	14,500	21,700	41,800	66,700	118,000	240,000
100	1,690	3,540	6,670	13,700	20,500	39,500	63,000	111,000	227,000
125	1,500	3,140	5,910	12,100	18,200	35,000	55,800	98,700	201,000
150	1,360	2,840	5,360	11,000	16,500	31,700	50,600	89,400	182,000
175	1,250	2,620	4,930	10,100	15,200	29,200	46,500	82,300	167,800
200	1,160	2,430	4,580	9,410	14,100	27,200	43,300	76,500	156,100
250	1,030	2,160	4,060	8,340	12,500	24,100	38,400	67,800	138,400
300	935	1,950	3,680	7,560	11,300	21,800	34,800	61,500	125,400
350	860	1,800	3,390	6,950	10,400	20,100	32,000	56,500	115,300
400	800	1,670	3,150	6,470	9,690	18,700	29,800	52,600	107,300
450	751	1,570	2,960	6,070	9,090	17,500	27,900	49,400	100,700
500	709	1,480	2,790	5,730	8,590	16,500	26,400	46,600	95,100
550	673	1,410	2,650	5,450	8,160	15,700	25,000	44,300	90,300
600	642	1,340	2,530	5,200	7,780	15,000	23,900	42,200	86,200
650	615	1,290	2,420	4,980	7,450	14,400	22,900	40,500	82,500
700	591	1,240	2,330	4,780	7,160	13,800	22,000	38,900	79,300
750	569	1,190	2,240	4,600	6,900	13,300	21,200	37,400	76,400

800	550	1,150	2,170	4,450	6,660	12,800	20,500	36,200	73,700
850	532	1,110	2,100	4,300	6,450	12,400	19,800	35,000	71,400
900	516	1,080	2,030	4,170	6,250	12,000	19,200	33,900	69,200
950	501	1,050	1,970	4,050	6,070	11,700	18,600	32,900	67,200
1,000	487	1,020	1,920	3,940	5,900	11,400	18,100	32,000	65,400
1,100	463	968	1,820	3,740	5,610	10,800	17,200	30,400	62,100
1,200	442	923	1,740	3,570	5,350	10,300	16,400	29,000	59,200
1,300	423	884	1,670	3,420	5,120	9,870	15,700	27,800	56,700
1,400	406	849	1,600	3,280	4,920	9,480	15,100	26,700	54,500
1,500	391	818	1,540	3,160	4,740	9,130	14,600	25,700	52,500
1,600	378	790	1,490	3,060	4,580	8,820	14,100	24,800	50,700
1,700	366	765	1,440	2,960	4,430	8,530	13,600	24,000	49,000
1,800	355	741	1,400	2,870	4,300	8,270	13,200	23,300	47,600
1,900	344	720	1,360	2,780	4,170	8,040	12,800	22,600	46,200
2,000	335	700	1,320	2,710	4,060	7,820	12,500	22,000	44,900

For SI: 1 inch = 25.4 mm, 1 foot = 304.8 mm, 1 pound per square inch = 6.895 kPa, 1-inch water column = 0.2488 kPa, 1 British thermal unit per hour = 0.2931 W, 1 cubic foot per hour = 0.0283 m^3/h, 1 degree = 0.01745 rad.

Note: All table entries have been rounded to three significant digits.

TABLE 2413.4(11)
SCHEDULE 40 METALLIC PIPE

Gas	Undiluted Propane
Inlet Pressure	2.0 psi
Pressure Drop	1.0 psi
Specific Gravity	1.50

INTENDED USE	**Pipe sizing between 2 psig service and line pressure regulator.**								
PIPE SIZE (in.)									
Nominal	½	¾	1	1¼	1½	2	2½	3	4
Actual ID	0.622	0.824	1.049	1.380	1.610	2.067	2.469	3.068	4.026
Length (ft)	**Capacity in Thousands of Btu per Hour**								
10	2,680	5,590	10,500	21,600	32,400	62,400	99,500	176,000	359,000
20	1,840	3,850	7,240	14,900	22,300	42,900	68,400	121,000	247,000
30	1,480	3,090	5,820	11,900	17,900	34,500	54,900	97,100	198,000
40	1,260	2,640	4,980	10,200	15,300	29,500	47,000	83,100	170,000
50	1,120	2,340	4,410	9,060	13,600	26,100	41,700	73,700	150,000
60	1,010	2,120	4,000	8,210	12,300	23,700	37,700	66,700	136,000
70	934	1,950	3,680	7,550	11,300	21,800	34,700	61,400	125,000
80	869	1,820	3,420	7,020	10,500	20,300	32,300	57,100	116,000
90	815	1,700	3,210	6,590	9,880	19,000	30,300	53,600	109,000
100	770	1,610	3,030	6,230	9,330	18,000	28,600	50,600	103,000

125	682	1,430	2,690	5,520	8,270	15,900	25,400	44,900	91,500
150	618	1,290	2,440	5,000	7,490	14,400	23,000	40,700	82,900
175	569	1,190	2,240	4,600	6,890	13,300	21,200	37,400	76,300
200	529	1,110	2,080	4,280	6,410	12,300	19,700	34,800	71,000
250	469	981	1,850	3,790	5,680	10,900	17,400	30,800	62,900
300	425	889	1,670	3,440	5,150	9,920	15,800	27,900	57,000
350	391	817	1,540	3,160	4,740	9,120	14,500	25,700	52,400
400	364	760	1,430	2,940	4,410	8,490	13,500	23,900	48,800
450	341	714	1,340	2,760	4,130	7,960	12,700	22,400	45,800
500	322	674	1,270	2,610	3,910	7,520	12,000	21,200	43,200
550	306	640	1,210	2,480	3,710	7,140	11,400	20,100	41,100
600	292	611	1,150	2,360	3,540	6,820	10,900	19,200	39,200
650	280	585	1,100	2,260	3,390	6,530	10,400	18,400	37,500
700	269	562	1,060	2,170	3,260	6,270	9,990	17,700	36,000
750	259	541	1,020	2,090	3,140	6,040	9,630	17,000	34,700
800	250	523	985	2,020	3,030	5,830	9,300	16,400	33,500
850	242	506	953	1,960	2,930	5,640	9,000	15,900	32,400
900	235	490	924	1,900	2,840	5,470	8,720	15,400	31,500
950	228	476	897	1,840	2,760	5,310	8,470	15,000	30,500
1,000	222	463	873	1,790	2,680	5,170	8,240	14,600	29,700
1,100	210	440	829	1,700	2,550	4,910	7,830	13,800	28,200
1,200	201	420	791	1,620	2,430	4,680	7,470	13,200	26,900
1,300	192	402	757	1,550	2,330	4,490	7,150	12,600	25,800
1,400	185	386	727	1,490	2,240	4,310	6,870	12,100	24,800
1,500	178	372	701	1,440	2,160	4,150	6,620	11,700	23,900
1,600	172	359	677	1,390	2,080	4,010	6,390	11,300	23,000
1,700	166	348	655	1,340	2,010	3,880	6,180	10,900	22,300
1,800	161	337	635	1,300	1,950	3,760	6,000	10,600	21,600
1,900	157	327	617	1,270	1,900	3,650	5,820	10,300	21,000
2,000	152	318	600	1,230	1,840	3,550	5,660	10,000	20,400

For SI: 1 inch = 25.4 mm, 1 foot = 304.8 mm, 1 pound per square inch = 6.895 kPa, 1-inch water column = 0.2488 kPa, 1 British thermal unit per hour = 0.2931 W, 1 cubic foot per hour = 0.0283 m^3/h, 1 degree = 0.01745 rad.

Note: All table entries have been rounded to three significant digits.

TABLE 2413.4(12)
SCHEDULE 40 METALLIC PIPE

Gas	Undiluted Propane
Inlet Pressure	11.0 in. w.c.
Pressure Drop	0.5 in. w.c.
Specific Gravity	1.50

INTENDED USE	**Pipe sizing between single- or second-stage (low pressure) regulator and appliance.**
PIPE SIZE (in.)	

Nominal	½	¾	1	1¼	1½	2	2½	3	4
Actual ID	0.622	0.824	1.049	1.380	1.610	2.067	2.469	3.068	4.026
Length (ft)	**Capacity in Thousands of Btu per Hour**								
10	291	608	1,150	2,350	3,520	6,790	10,800	19,100	39,000
20	200	418	787	1,620	2,420	4,660	7,430	13,100	26,800
30	160	336	632	1,300	1,940	3,750	5,970	10,600	21,500
40	137	287	541	1,110	1,660	3,210	5,110	9,030	18,400
50	122	255	480	985	1,480	2,840	4,530	8,000	16,300
60	110	231	434	892	1,340	2,570	4,100	7,250	14,800
80	101	212	400	821	1,230	2,370	3,770	6,670	13,600
100	94	197	372	763	1,140	2,200	3,510	6,210	12,700
125	89	185	349	716	1,070	2,070	3,290	5,820	11,900
150	84	175	330	677	1,010	1,950	3,110	5,500	11,200
175	74	155	292	600	899	1,730	2,760	4,880	9,950
200	67	140	265	543	814	1,570	2,500	4,420	9,010
250	62	129	243	500	749	1,440	2,300	4,060	8,290
300	58	120	227	465	697	1,340	2,140	3,780	7,710
350	51	107	201	412	618	1,190	1,900	3,350	6,840
400	46	97	182	373	560	1,080	1,720	3,040	6,190
450	42	89	167	344	515	991	1,580	2,790	5,700
500	40	83	156	320	479	922	1,470	2,600	5,300
550	37	78	146	300	449	865	1,380	2,440	4,970
600	35	73	138	283	424	817	1,300	2,300	4,700
650	33	70	131	269	403	776	1,240	2,190	4,460
700	32	66	125	257	385	741	1,180	2,090	4,260
750	30	64	120	246	368	709	1,130	2,000	4,080
800	29	61	115	236	354	681	1,090	1,920	3,920
850	28	59	111	227	341	656	1,050	1,850	3,770
900	27	57	107	220	329	634	1,010	1,790	3,640
950	26	55	104	213	319	613	978	1,730	3,530
1,000	25	53	100	206	309	595	948	1,680	3,420
1,100	25	52	97	200	300	578	921	1,630	3,320
1,200	24	50	95	195	292	562	895	1,580	3,230
1,300	23	48	90	185	277	534	850	1,500	3,070
1,400	22	46	86	176	264	509	811	1,430	2,930
1,500	21	44	82	169	253	487	777	1,370	2,800
1,600	20	42	79	162	243	468	746	1,320	2,690
1,700	19	40	76	156	234	451	719	1,270	2,590
1,800	19	39	74	151	226	436	694	1,230	2,500
1,900	18	38	71	146	219	422	672	1,190	2,420
2,000	18	37	69	142	212	409	652	1,150	2,350

For SI: 1 inch = 25.4 mm, 1 foot = 304.8 mm, 1 pound per square inch = 6.895 kPa, 1-inch water column = 0.2488 kPa, 1 British thermal unit per hour = 0.2931 W, 1 cubic foot per hour = 0.0283 m^3/h, 1 degree = 0.01745 rad.

TABLE 2413.4(13)
SEMIRIGID COPPER TUBING

Gas	Undiluted Propane
Inlet Pressure	10.0 psi
Pressure Drop	1.0 psi
Specific Gravity	1.50

INTENDED USE		**Sizing between first stage (high-pressure regulator) and second stage (low-pressure regulator).**								
TUBE SIZE (in.)										
Nominal	**K & L**	¼	$^3/_8$	½	$^5/_8$	¾	1	1¼	1½	2
	ACR	$^3/_8$	½	$^5/_8$	¾	$^7/_8$	$1^1/_8$	$1^3/_8$	—	—
Outside		0.375	0.500	0.625	0.750	0.875	1.125	1.375	1.625	2.125
Inside		0.305	0.402	0.527	0.652	0.745	0.995	1.245	1.481	1.959
Length (ft)		**Capacity in Thousands of Btu per Hour**								
10		513	1,060	2,150	3,760	5,330	11,400	20,500	32,300	67,400
20		352	727	1,480	2,580	3,670	7,830	14,100	22,200	46,300
30		283	584	1,190	2,080	2,940	6,290	11,300	17,900	37,200
40		242	500	1,020	1,780	2,520	5,380	9,690	15,300	31,800
50		215	443	901	1,570	2,230	4,770	8,590	13,500	28,200
60		194	401	816	1,430	2,020	4,320	7,780	12,300	25,600
70		179	369	751	1,310	1,860	3,980	7,160	11,300	23,500
80		166	343	699	1,220	1,730	3,700	6,660	10,500	21,900
90		156	322	655	1,150	1,630	3,470	6,250	9,850	20,500
100		147	304	619	1,080	1,540	3,280	5,900	9,310	19,400
125		131	270	549	959	1,360	2,910	5,230	8,250	17,200
150		118	244	497	869	1,230	2,630	4,740	7,470	15,600
175		109	225	457	799	1,130	2,420	4,360	6,880	14,300
200		101	209	426	744	1,060	2,250	4,060	6,400	13,300
250		90	185	377	659	935	2,000	3,600	5,670	11,800
300		81	168	342	597	847	1,810	3,260	5,140	10,700
350		75	155	314	549	779	1,660	3,000	4,730	9,840
400		70	144	292	511	725	1,550	2,790	4,400	9,160
450		65	135	274	480	680	1,450	2,620	4,130	8,590
500		62	127	259	453	643	1,370	2,470	3,900	8,120
550		59	121	246	430	610	1,300	2,350	3,700	7,710
600		56	115	235	410	582	1,240	2,240	3,530	7,350
650		54	111	225	393	558	1,190	2,140	3,380	7,040
700		51	106	216	378	536	1,140	2,060	3,250	6,770
750		50	102	208	364	516	1,100	1,980	3,130	6,520
800		48	99	201	351	498	1,060	1,920	3,020	6,290
850		46	96	195	340	482	1,030	1,850	2,920	6,090
900		45	93	189	330	468	1,000	1,800	2,840	5,910

950	44	90	183	320	454	970	1,750	2,750	5,730
1,000	42	88	178	311	442	944	1,700	2,680	5,580
1,100	40	83	169	296	420	896	1,610	2,540	5,300
1,200	38	79	161	282	400	855	1,540	2,430	5,050
1,300	37	76	155	270	383	819	1,470	2,320	4,840
1,400	35	73	148	260	368	787	1,420	2,230	4,650
1,500	34	70	143	250	355	758	1,360	2,150	4,480
1,600	33	68	138	241	343	732	1,320	2,080	4,330
1,700	32	66	134	234	331	708	1,270	2,010	4,190
1,800	31	64	130	227	321	687	1,240	1,950	4,060
1,900	30	62	126	220	312	667	1,200	1,890	3,940
2,000	29	60	122	214	304	648	1,170	1,840	3,830

For SI: 1 inch = 25.4 mm, 1 foot = 304.8 mm, 1 pound per square inch = 6.895 kPa, 1-inch water column = 0.2488 kPa, 1 British thermal unit per hour = 0.2931 W, 1 cubic foot per hour = 0.0283 m^3/h, 1 degree = 0.01745 rad.

Notes:

1 Table capacities are based on Type K copper tubing inside diameter (shown), which has the smallest inside diameter of the copper tubing products.

2 All table entries have been rounded to three significant digits.

TABLE 2413.4(14)
SEMIRIGID COPPER TUBING

Gas	Undiluted Propane
Inlet Pressure	11.0 in. w.c.
Pressure Drop	0.5 in. w.c.
Specific Gravity	1.50

INTENDED USE		**Sizing between single- or second-stage (low-pressure regulator) and appliance.**								
TUBE SIZE (in.)										
Nominal	**K & L**	¼	$^3/_8$	½	$^5/_8$	¾	1	1¼	1½	2
	ACR	$^3/_8$	½	$^5/_8$	¾	$^7/_8$	$1^1/_8$	$1^3/_8$	—	—
Outside		0.375	0.500	0.625	0.750	0.875	1.125	1.375	1.625	2.125
Inside		0.305	0.402	0.527	0.652	0.745	0.995	1.245	1.481	1.959
Length (ft)		**Capacity in Thousands of Btu per Hour**								
10		45	93	188	329	467	997	1,800	2,830	5,890
20		31	64	129	226	321	685	1,230	1,950	4,050
30		25	51	104	182	258	550	991	1,560	3,250
40		21	44	89	155	220	471	848	1,340	2,780
50		19	39	79	138	195	417	752	1,180	2,470
60		17	35	71	125	177	378	681	1,070	2,240
70		16	32	66	115	163	348	626	988	2,060
80		15	30	61	107	152	324	583	919	1,910

90	14	28	57	100	142	304	547	862	1,800
100	13	27	54	95	134	287	517	814	1,700
125	11	24	48	84	119	254	458	722	1,500
150	10	21	44	76	108	230	415	654	1,360
175	NA	20	40	70	99	212	382	602	1,250
200	NA	18	37	65	92	197	355	560	1,170
250	NA	16	33	58	82	175	315	496	1,030
300	NA	15	30	52	74	158	285	449	936
350	NA	14	28	48	68	146	262	414	861
400	NA	13	26	45	63	136	244	385	801
450	NA	12	24	42	60	127	229	361	752
500	NA	11	23	40	56	120	216	341	710
550	NA	11	22	38	53	114	205	324	674
600	NA	10	21	36	51	109	196	309	643
650	NA	NA	20	34	49	104	188	296	616
700	NA	NA	19	33	47	100	180	284	592
750	NA	NA	18	32	45	96	174	274	570
800	NA	NA	18	31	44	93	168	264	551
850	NA	NA	17	30	42	90	162	256	533
900	NA	NA	17	29	41	87	157	248	517
950	NA	NA	16	28	40	85	153	241	502
1,000	NA	NA	16	27	39	83	149	234	488
1,100	NA	NA	15	26	37	78	141	223	464
1,200	NA	NA	14	25	35	75	135	212	442
1,300	NA	NA	14	24	34	72	129	203	423
1,400	NA	NA	13	23	32	69	124	195	407
1,500	NA	NA	13	22	31	66	119	188	392
1,600	NA	NA	12	21	30	64	115	182	378
1,700	NA	NA	12	20	29	62	112	176	366
1,800	NA	NA	11	20	28	60	108	170	355
1,900	NA	NA	11	19	27	58	105	166	345
2,000	NA	NA	11	19	27	57	102	161	335

For SI: 1 inch = 25.4 mm, 1 foot = 304.8 mm, 1 pound per square inch = 6.895kPa, 1-inch water column = 0.2488 kPa, 1 British thermal unit per hour = 0.2931 W, 1 cubic foot per hour = 0.0283 m^3/h, 1 degree = 0.01745 rad.

Notes:

1 Table capacities are based on Type K copper tubing inside diameter (shown), which has the smallest inside diameter of the copper tubing products.

2 NA means a flow of less than 10,000 Btu/hr.

3 All table entries have been rounded to three significant digits.

TABLE 2413.4(15)
SEMIRIGID COPPER TUBING

Gas	Undiluted Propane
Inlet Pressure	2.0 psi
Pressure Drop	1.0 psi
Specific Gravity	1.50

INTENDED USE		Tube sizing between 2 psig service and line pressure regulator.								
TUBE SIZE (in.)										
Nominal	K & L	¼	3/8	½	5/8	¾	1	1¼	1½	2
	ACR	3/8	½	5/8	¾	7/8	1 1/8	1 3/8	—	—
Outside		0.375	0.500	0.625	0.750	0.875	1.125	1.375	1.625	2.125
Inside		0.305	0.402	0.527	0.652	0.745	0.995	1.245	1.481	1.959
Length (ft)		Capacity in Thousands of Btu per Hour								
10		413	852	1,730	3,030	4,300	9,170	16,500	26,000	54,200
20		284	585	1,190	2,080	2,950	6,310	11,400	17,900	37,300
30		228	470	956	1,670	2,370	5,060	9,120	14,400	29,900
40		195	402	818	1,430	2,030	4,330	7,800	12,300	25,600
50		173	356	725	1,270	1,800	3,840	6,920	10,900	22,700
60		157	323	657	1,150	1,630	3,480	6,270	9,880	20,600
70		144	297	605	1,060	1,500	3,200	5,760	9,090	18,900
80		134	276	562	983	1,390	2,980	5,360	8,450	17,600
90		126	259	528	922	1,310	2,790	5,030	7,930	16,500
100		119	245	498	871	1,240	2,640	4,750	7,490	15,600
125		105	217	442	772	1,100	2,340	4,210	6,640	13,800
150		95	197	400	700	992	2,120	3,820	6,020	12,500
175		88	181	368	644	913	1,950	3,510	5,540	11,500
200		82	168	343	599	849	1,810	3,270	5,150	10,700
250		72	149	304	531	753	1,610	2,900	4,560	9,510
300		66	135	275	481	682	1,460	2,620	4,140	8,610
350		60	124	253	442	628	1,340	2,410	3,800	7,920
400		56	116	235	411	584	1,250	2,250	3,540	7,370
450		53	109	221	386	548	1,170	2,110	3,320	6,920
500		50	103	209	365	517	1,110	1,990	3,140	6,530
550		47	97	198	346	491	1,050	1,890	2,980	6,210
600		45	93	189	330	469	1,000	1,800	2,840	5,920
650		43	89	181	316	449	959	1,730	2,720	5,670
700		41	86	174	304	431	921	1,660	2,620	5,450
750		40	82	168	293	415	888	1,600	2,520	5,250
800		39	80	162	283	401	857	1,540	2,430	5,070
850		37	77	157	274	388	829	1,490	2,350	4,900
900		36	75	152	265	376	804	1,450	2,280	4,750
950		35	72	147	258	366	781	1,410	2,220	4,620
1,000		34	71	143	251	356	760	1,370	2,160	4,490
1,100		32	67	136	238	338	721	1,300	2,050	4,270
1,200		31	64	130	227	322	688	1,240	1,950	4,070
1,300		30	61	124	217	309	659	1,190	1,870	3,900
1,400		28	59	120	209	296	633	1,140	1,800	3,740
1,500		27	57	115	201	286	610	1,100	1,730	3,610
1,600		26	55	111	194	276	589	1,060	1,670	3,480
1,700		26	53	108	188	267	570	1,030	1,620	3,370
1,800		25	51	104	182	259	553	1,000	1,570	3,270
1,900		24	50	101	177	251	537	966	1,520	3,170

2,000	23	48	99	172	244	522	940	1,480	3,090

For SI: 1 inch = 25.4 mm, 1 foot = 304.8 mm, 1 pound per square inch = 6.895kPa, 1-inch water column = 0.2488 kPa, 1 British thermal unit per hour = 0.2931 W, 1 cubic foot per hour = 0.0283 m^3/h, 1 degree = 0.01745 rad.

Notes:

1 Table capacities are based on Type K copper tubing inside diameter (shown), which has the smallest inside diameter of the copper tubing products.

2 All table entries have been rounded to three significant digits.

TABLE 2413.4(16)
CORRUGATED STAINLESS STEEL TUBING (CSST)

Gas	Undiluted Propane
Inlet Pressure	11.0 in. w.c.
Pressure Drop	0.5 in. w.c.
Specific Gravity	1.50

INTENDED USE	**Sizing between single or second stage (low pressure) regulator and the appliance shutoff valve.**													
TUBE SIZE (EHD)														
Flow Designation	13	15	18	19	23	25	30	31	37	39	46	48	60	62
Length (ft)	**Capacity in Thousands of Btu per Hour**													
5	72	99	181	211	355	426	744	863	1,420	1,638	2,830	3,270	5,780	6,550
10	50	69	129	150	254	303	521	605	971	1,179	1,990	2,320	4,110	4,640
15	39	55	104	121	208	248	422	490	775	972	1,620	1,900	3,370	3,790
20	34	49	91	106	183	216	365	425	661	847	1,400	1,650	2,930	3,290
25	30	42	82	94	164	192	325	379	583	762	1,250	1,480	2,630	2,940
30	28	39	74	87	151	177	297	344	528	698	1,140	1,350	2,400	2,680
40	23	33	64	74	131	153	256	297	449	610	988	1,170	2,090	2,330
50	20	30	58	66	118	137	227	265	397	548	884	1,050	1,870	2,080
60	19	26	53	60	107	126	207	241	359	502	805	961	1,710	1,900
70	17	25	49	57	99	117	191	222	330	466	745	890	1,590	1,760
80	15	23	45	52	94	109	178	208	307	438	696	833	1,490	1,650
90	15	22	44	50	90	102	169	197	286	414	656	787	1,400	1,550
100	14	20	41	47	85	98	159	186	270	393	621	746	1,330	1,480
150	11	15	31	36	66	75	123	143	217	324	506	611	1,090	1,210
200	9	14	28	33	60	69	112	129	183	283	438	531	948	1,050
250	8	12	25	30	53	61	99	117	163	254	390	476	850	934
300	8	11	23	26	50	57	90	107	147	234	357	434	777	854

For SI: 1 inch = 25.4 mm, 1 foot = 304.8 mm, 1 pound per square inch = 6.895kPa, 1-inch water column = 0.2488 kPa, 1 British thermal unit per hour = 0.2931 W, 1 cubic foot per hour = 0.0283 m^3/h, 1 degree = 0.01745 rad.

Notes:

1 Table includes losses for four 90-degree bends and two end fittings. Tubing runs with larger numbers of bends and/or fittings shall be increased by an equivalent length of tubing to the following equation: L = 1.3*n* where L is additional length

(feet) of tubing and *n* is the number of additional fittings and/or bends.

2 EHD—Equivalent Hydraulic Diameter, which is a measure of the relative hydraulic efficiency between different tubing sizes. The greater the value of EHD, the greater the gas capacity of the tubing.

3 All table entries have been rounded to three significant digits.

TABLE 2413.4(17)
CORRUGATED STAINLESS STEEL TUBING (CSST)

Gas	Undiluted Propane
Inlet Pressure	2.0 psi
Pressure Drop	1.0 psi
Specific Gravity	1.50

INTENDED USE	**Sizing between 2 psi service and the line pressure regulator.**													
	TUBE SIZE (EHD)													
Flow Designation	13	15	18	19	23	25	30	31	37	39	46	48	60	62
Length (ft)	**Capacity in Thousands of Btu per Hour**													
10	426	558	927	1,110	1,740	2,170	4,100	4,720	7,130	7,958	15,200	16,800	29,400	34,200
25	262	347	591	701	1,120	1,380	2,560	2,950	4,560	5,147	9,550	10,700	18,800	21,700
30	238	316	540	640	1,030	1,270	2,330	2,690	4,180	4,719	8,710	9,790	17,200	19,800
40	203	271	469	554	896	1,100	2,010	2,320	3,630	4,116	7,530	8,500	14,900	17,200
50	181	243	420	496	806	986	1,790	2,070	3,260	3,702	6,730	7,610	13,400	15,400
75	147	196	344	406	663	809	1,460	1,690	2,680	3,053	5,480	6,230	11,000	12,600
80	140	189	333	393	643	768	1,410	1,630	2,590	2,961	5,300	6,040	10,600	12,200
100	124	169	298	350	578	703	1,260	1,450	2,330	2,662	4,740	5,410	9,530	10,900
150	101	137	245	287	477	575	1,020	1,180	1,910	2,195	3,860	4,430	7,810	8,890
200	86	118	213	248	415	501	880	1,020	1,660	1,915	3,340	3,840	6,780	7,710
250	77	105	191	222	373	448	785	910	1,490	1,722	2,980	3,440	6,080	6,900
300	69	96	173	203	343	411	716	829	1,360	1,578	2,720	3,150	5,560	6,300
400	60	82	151	175	298	355	616	716	1,160	1,376	2,350	2,730	4,830	5,460
500	53	72	135	158	268	319	550	638	1,030	1,237	2,100	2,450	4,330	4,880

For SI: 1 inch = 25.4 mm, 1 foot = 304.8 mm, 1 pound per square inch = 6.895kPa, 1-inch water column = 0.2488 kPa, 1 British thermal unit per hour = 0.2931 W, 1 cubic foot per hour = 0.0283 m^3/h, 1 degree = 0.01745 rad.

Notes:

1 Table does not include effect of pressure drop across the line regulator. Where regulator loss exceeds ½ psi (based on 13 in. w.c. outlet pressure), DO NOT USE THIS TABLE. Consult with the regulator manufacturer for pressure drops and capacity factors. Pressure drops across a regulator can vary with flow rate.

2 CAUTION: Capacities shown in the table might exceed maximum capacity for a selected regulator. Consult with the regulator or tubing manufacturer for guidance.

3 Table includes losses for four 90-degree bends and two end fittings. Tubing runs with larger numbers of bends and/or fittings shall be increased by an equivalent length of tubing to the following equation: L = 1.3*n* where L is additional length (feet) of tubing and *n* is the number of additional fittings and/or bends.

4 EHD—Equivalent Hydraulic Diameter, which is a measure of the relative hydraulic efficiency between different tubing

sizes. The greater the value of EHD, the greater the gas capacity of the tubing.

5 All table entries have been rounded to three significant digits.

TABLE 2413.4(18)
CORRUGATED STAINLESS STEEL TUBING (CSST)

Gas	Undiluted Propane
Inlet Pressure	5.0 psi
Pressure Drop	3.5 psi
Specific Gravity	1.50

TUBE SIZE (EHD)														
Flow Designation	13	15	18	19	23	25	30	31	37	39	46	48	60	62
Length (ft)	**Capacity in Thousands of Btu per Hour**													
10	826	1,070	1,710	2,060	3,150	4,000	7,830	8,950	13,100	14,441	28,600	31,200	54,400	63,800
25	509	664	1,090	1,310	2,040	2,550	4,860	5,600	8,400	9,339	18,000	19,900	34,700	40,400
30	461	603	999	1,190	1,870	2,340	4,430	5,100	7,680	8,564	16,400	18,200	31,700	36,900
40	396	520	867	1,030	1,630	2,030	3,820	4,400	6,680	7,469	14,200	15,800	27,600	32,000
50	352	463	777	926	1,460	1,820	3,410	3,930	5,990	6,717	12,700	14,100	24,700	28,600
75	284	376	637	757	1,210	1,490	2,770	3,190	4,920	5,539	10,300	11,600	20,300	23,400
80	275	363	618	731	1,170	1,450	2,680	3,090	4,770	5,372	9,990	11,200	19,600	22,700
100	243	324	553	656	1,050	1,300	2,390	2,760	4,280	4,830	8,930	10,000	17,600	20,300
150	196	262	453	535	866	1,060	1,940	2,240	3,510	3,983	7,270	8,210	14,400	16,600
200	169	226	393	464	755	923	1,680	1,930	3,050	3,474	6,290	7,130	12,500	14,400
250	150	202	352	415	679	828	1,490	1,730	2,740	3,124	5,620	6,390	11,200	12,900
300	136	183	322	379	622	757	1,360	1,570	2,510	2,865	5,120	5,840	10,300	11,700
400	117	158	279	328	542	657	1,170	1,360	2,180	2,498	4,430	5,070	8,920	10,200
500	104	140	251	294	488	589	1,050	1,210	1,950	2,247	3,960	4,540	8,000	9,110

For SI: 1 inch = 25.4 mm, 1 foot = 304.8 mm, 1 pound per square inch = 6.895kPa, 1-inch water column = 0.2488 kPa, 1 British thermal unit per hour = 0.2931 W, 1 cubic foot per hour = 0.0283 m^3/h, 1 degree = 0.01745 rad.

Notes:

1 Table does not include effect of pressure drop across line regulator. Where regulator loss exceeds1 psi, DO NOT USE THIS TABLE. Consult with the regulator manufacturer for pressure drops and capacity factors. Pressure drop across regulator can vary with the flow rate.

2 CAUTION: Capacities shown in the table might exceed maximum capacity of selected regulator. Consult with the tubing manufacturer for guidance.

3 Table includes losses for four 90-degree bends and two end fittings. Tubing runs with larger numbers of bends and/or fittings shall be increased by an equivalent length of tubing to the following equation: L = 1.3*n* where L is additional length (feet) of tubing and *n* is the number of additional fittings and/or bends.

4 EHD— Equivalent Hydraulic Diameter, which is a measure of the relative hydraulic efficiency between different tubing sizes. The greater the value of EHD, the greater the gas capacity of the tubing.

5 All table entries have been rounded to three significant digits.

TABLE 2413.4(19)
POLYETHYLENE PLASTIC PIPE

Gas	Undiluted Propane
Inlet Pressure	11.0 in. w.c.
Pressure Drop	0.5 in. w.c.
Specific Gravity	1.50

INTENDED USE	**PE pipe sizing between integral 2-stage regulator at tank or second stage (low pressure regulator) and building.**					
PIPE SIZE (in.)						
Nominal OD	½	¾	1	1¼	1½	2
Designation	SDR 9.33	SDR 11.0	SDR 11.00	SDR 10.00	SDR 11.00	SDR 11.00
Actual ID	0.660	0.860	1.077	1.328	1.554	1.943
Length (ft)	**Capacity in Thousands of Btu per Hour**					
10	340	680	1,230	2,130	3,210	5,770
20	233	468	844	1,460	2,210	3,970
30	187	375	677	1,170	1,770	3,180
40	160	321	580	1,000	1,520	2,730
50	142	285	514	890	1,340	2,420
60	129	258	466	807	1,220	2,190
70	119	237	428	742	1,120	2,010
80	110	221	398	690	1,040	1,870
90	103	207	374	648	978	1,760
100	98	196	353	612	924	1,660
125	87	173	313	542	819	1,470
150	78	157	284	491	742	1,330
175	72	145	261	452	683	1,230
200	67	135	243	420	635	1,140
250	60	119	215	373	563	1,010
300	54	108	195	338	510	916
350	50	99	179	311	469	843
400	46	92	167	289	436	784
450	43	87	157	271	409	736
500	41	82	148	256	387	695

For SI: 1 inch = 25.4 mm, 1 foot = 304.8 mm, 1 pound per square inch = 6.895kPa, 1-inch water column = 0.2488 kPa, 1 British thermal unit per hour = 0.2931 W, 1 cubic foot per hour = 0.0283 m^3/h, 1 degree = 0.01745 rad.

Note: All table entries have been rounded to three significant digits.

TABLE 2413.4(20)
POLYETHYLENE PLASTIC PIPE

Gas	Undiluted Propane
Inlet Pressure	2.0 psi
Pressure Drop	1.0 psi
Specific Gravity	1.50

INTENDED USE	**PE pipe sizing between 2 psig service regulator and line pressure regulator.**					
PIPE SIZE (in.)						
Nominal OD	½	¾	1	1¼	1½	2
Designation	SDR 9.33	SDR 11.0	SDR 11.00	SDR 10.00	SDR 11.00	SDR 11.00
Actual ID	0.660	0.860	1.077	1.328	1.554	1.943
Length (ft)	**Capacity in Thousands of Btu per Hour**					
10	3,130	6,260	11,300	19,600	29,500	53,100
20	2,150	4,300	7,760	13,400	20,300	36,500
30	1,730	3,450	6,230	10,800	16,300	29,300
40	1,480	2,960	5,330	9,240	14,000	25,100
50	1,310	2,620	4,730	8,190	12,400	22,200
60	1,190	2,370	4,280	7,420	11,200	20,100
70	1,090	2,180	3,940	6,830	10,300	18,500
80	1,010	2,030	3,670	6,350	9,590	17,200
90	952	1,910	3,440	5,960	9,000	16,200
100	899	1,800	3,250	5,630	8,500	15,300
125	797	1,600	2,880	4,990	7,530	13,500
150	722	1,450	2,610	4,520	6,830	12,300
175	664	1,330	2,400	4,160	6,280	11,300
200	618	1,240	2,230	3,870	5,840	10,500
250	548	1,100	1,980	3,430	5,180	9,300
300	496	994	1,790	3,110	4,690	8,430
350	457	914	1,650	2,860	4,320	7,760
400	425	851	1,530	2,660	4,020	7,220
450	399	798	1,440	2,500	3,770	6,770
500	377	754	1,360	2,360	3,560	6,390
550	358	716	1,290	2,240	3,380	6,070
600	341	683	1,230	2,140	3,220	5,790
650	327	654	1,180	2,040	3,090	5,550
700	314	628	1,130	1,960	2,970	5,330
750	302	605	1,090	1,890	2,860	5,140
800	292	585	1,050	1,830	2,760	4,960
850	283	566	1,020	1,770	2,670	4,800
900	274	549	990	1,710	2,590	4,650
950	266	533	961	1,670	2,520	4,520

1,000	259	518	935	1,620	2,450	4,400
1,100	246	492	888	1,540	2,320	4,170
1,200	234	470	847	1,470	2,220	3,980
1,300	225	450	811	1,410	2,120	3,810
1,400	216	432	779	1,350	2,040	3,660
1,500	208	416	751	1,300	1,960	3,530
1,600	201	402	725	1,260	1,900	3,410
1,700	194	389	702	1,220	1,840	3,300
1,800	188	377	680	1,180	1,780	3,200
1,900	183	366	661	1,140	1,730	3,110
2,000	178	356	643	1,110	1,680	3,020

For SI: 1 inch = 25.4 mm, 1 foot = 304.8 mm, 1 pound per square inch = 6.895 kPa, 1-inch water column = 0.2488 kPa, 1 British thermal unit per hour = 0.2931 W, 1 cubic foot per hour = 0.0283 m^3/h, 1 degree = 0.01745 rad.
Note: All table entries have been rounded to three significant digits.

TABLE 2413.4(21)
POLYETHYLENE PLASTIC TUBING

Gas	Undiluted Propane	
Inlet Pressure	11.0 in. w.c.	
Pressure Drop	0.5 in. w.c.	
Specific Gravity	1.50	
INTENDED USE	**PE pipe sizing between integral 2-stage regulator at tank or second stage (low pressure regulator) and building.**	
	Plastic Tubing Size (CTS) (in.)	
Nominal OD	½	1
Designation	SDR 7.00	SDR 11.00
Actual ID	0.445	0.927
Length (ft)	**Capacity in Cubic Feet of Gas per Hour**	
10	121	828
20	83	569
30	67	457
40	57	391
50	51	347
60	46	314
70	42	289
80	39	269
90	37	252
100	35	238
125	31	211
150	28	191
175	26	176

200	24	164
225	22	154
250	21	145
275	20	138
300	19	132
350	18	121
400	16	113
450	15	106
500	15	100

For SI: 1 inch = 25.4 mm, 1 foot = 304.8 mm, 1 pound per square inch = 6.895 kPa, 1-inch water column = 0.2488 kPa, 1 British thermal unit per hour = 0.2931 W, 1 cubic foot per hour = 0.0283 m^3/h, 1 degree = 0.01745 rad.

Note: All table entries have been rounded to three significant digits.

SECTION 2414
PIPING MATERIALS

2414.1 General. Materials used for piping systems shall comply with the requirements of this chapter or shall be approved.

2414.2 Used materials. Pipe, fittings, valves or other materials shall not be used again unless they are free of foreign materials and have been ascertained to be adequate for the service intended.

2414.3 Other materials. Material not covered by the standards specifications listed herein shall be investigated and tested to determine that it is safe and suitable for the proposed service, and, in addition, shall be recommended for that service by the manufacturer and shall be approved by the *building* official.

2414.4 Metallic pipe. Metallic pipe shall comply with Sections 2414.4.1 and 2414.4.2.

2414.4.1 Cast iron. Cast-iron pipe shall not be used.

2414.4.2 Steel. Steel and wrought-iron pipe shall be at least of standard weight (Schedule 40) and shall comply with one of the following:

1. ASME B 36.10, 10M;

2. ASTM A 53/A 53M; or

3. ASTM A 106.

2414.5 Metallic tubing. Seamless copper, aluminum alloy or steel tubing shall be permitted to be used with gases not corrosive to such material.

2414.5.1 Steel tubing. Steel tubing shall comply with ASTM A 254.

2414.5.2 Copper tubing. Copper tubing shall comply with standard Type K or L of ASTM B 88 or ASTM B 280.

Copper and brass tubing shall not be used if the gas contains more than an average of 0.3 grains of hydrogen sulfide per 100 standard cubic feet of gas (0.7 milligrams per 100 liters).

2414.5.3 Corrugated stainless steel tubing. Corrugated stainless steel tubing shall be listed in accordance with ANSI LC 1/CSA 6.26.

2414.6 Plastic pipe, tubing and fittings. Plastic pipe, tubing and fittings used to supply fuel gas shall conform to ASTM D 2513. Pipe shall be marked “Gas” and “ASTM D 2513.”

2414.6.1 Anodeless risers. Anodeless risers shall comply with the following:

1. Factory-assembled anodeless risers shall be recommended by the manufacturer for the gas used and shall be leak-tested by the manufacturer in accordance with written procedures.

2. Service head adapters and field-assembled anodeless risers incorporating service head adapters shall be recommended by the manufacturer for the gas used by the manufacturer and shall be designed certified to meet the requirements of Category I of ASTM D 2513, and U.S. Department of Transportation, Code of Federal Regulations, Title 49, Part 192.281(e). The manufacturer shall provide the user qualified installation instructions as prescribed by the U.S. Department of Transportation, Code of Federal Regulations, Title 49, Part 192.283(b).

2414.6.2 LP-gas systems. The use of plastic pipe, tubing and fittings in undiluted liquefied petroleum gas piping systems shall be in accordance with NFPA 58.

2414.6.3 Regulator vent piping. Plastic pipe, tubing and fittings used to connect regulator vents to remote vent terminations shall be of PVC conforming to ANSI/UL 651. PVC vent piping shall not be installed indoors.

2414.7 Workmanship and defects. Pipe or tubing and fittings shall be clear and free from cutting burrs and defects in structure or threading, and shall be thoroughly brushed, and chip and scale blown.

Defects in pipe or tubing or fittings shall not be repaired. Defective pipe, tubing or fittings shall be replaced. (See Section 2417.1.2.)

2414.8 Protective coating. Where in contact with material or atmosphere exerting a corrosive action, metallic piping and fittings coated with a corrosion-resistant material shall be used. External or internal coatings or linings used on piping or components shall not be considered as adding strength.

2414.9 Metallic pipe threads. Metallic pipe and fitting threads shall be taper pipe threads and shall comply with ASME B1.20.1.

2414.9.1 Damaged threads. Pipe with threads that are stripped, chipped, corroded or otherwise damaged shall not be used. If a weld opens during the operation of cutting or threading, that portion of the pipe shall not be used.

2414.9.2 Number of threads. Field threading of metallic pipe shall be in accordance with Table 2414.9.2.

TABLE 2414.9.2
SPECIFICATIONS FOR THREADING METALLIC PIPE

IRON PIPE SIZE (inches)	APPROXIMATE LENGTH OF THREADED PORTION (inches)	APPROXIMATE NO. OF THREADS TO BE CUT
½	¾	10
¾	¾	10
1	$^{7}/_{8}$	10
1¼	1	11
1½	1	11

For SI: 1 inch = 25.4 mm.

2414.9.3 Thread compounds. Thread (joint) compounds (pipe dope) shall be resistant to the action of liquefied petroleum gas or to any other chemical constituents of the gases to be conducted through the piping.

2414.10 Metallic piping joints and fittings. The type of piping joint used shall be suitable for the pressure-temperature conditions and shall be selected giving consideration to joint tightness and mechanical strength under the service conditions. The joint shall be able to sustain the maximum end force due to the internal pressure and any additional forces due to temperature expansion or contraction, vibration, fatigue, or to the weight of the pipe and its contents.

2414.10.1 Pipe joints. Pipe joints shall be threaded, flanged, brazed or welded. Where nonferrous pipe is brazed, the brazing materials shall have a melting point in excess of 1,000°F (538°C). Brazing alloys shall not contain more than 0.05-percent phosphorus.

2414.10.2 Tubing joints. Tubing joints shall be made with approved gas tubing fittings or be brazed with a material having a melting point in excess of 1,000°F (538°C) or made with press-connect fittings complying with ANSI LC-4. Brazing alloys shall not contain more than 0.05-percent phosphorus.

2414.10.3 Flared joints. Flared joints shall be used only in systems constructed from nonferrous pipe and tubing where experience or tests have demonstrated that the joint is suitable for the conditions and where provisions are made in the design to prevent separation of the joints.

2414.10.4 Metallic fittings. Metallic fittings, including valves, strainers and filters shall comply with the following:

1. Fittings used with steel or wrought-iron pipe shall be steel, brass, bronze, malleable iron, ductile iron or cast iron.

2. Fittings used with copper or brass pipe shall be copper, brass or bronze.

3. Cast-iron bushings shall be prohibited.

4. Special fittings. Fittings such as couplings, proprietary-type joints, saddle tees, gland-type compression fittings, and flared, flareless or compression-type tubing fittings shall be: used within the fitting

manufacturer's pressure-temperature recommendations; used within the service conditions anticipated with respect to vibration, fatigue, thermal expansion or contraction; installed or braced to prevent separation of the joint by gas pressure or external physical damage; and shall be approved.

2414.11 Plastic piping, joints and fittings. Plastic pipe, tubing and fittings shall be joined in accordance with the manufacturers' instructions. Such joints shall comply with the following:

1. The joints shall be designed and installed so that the longitudinal pull-out resistance of the joints will be at least equal to the tensile strength of the plastic piping material.

2. Heat-fusion joints shall be made in accordance with qualified procedures that have been established and proven by test to produce gas-tight joints at least as strong as the pipe or tubing being joined. Joints shall be made with the joining method recommended by the pipe manufacturer. Heat fusion fittings shall be marked "ASTM D 2513."

3. Where compression-type mechanical joints are used, the gasket material in the fitting shall be compatible with the plastic piping and with the gas distributed by the system. An internal tubular rigid stiffener shall be used in conjunction with the fitting. The stiffener shall be flush with the end of the pipe or tubing and shall extend at least to the outside end of the compression fitting when installed. The stiffener shall be free of rough or sharp edges and shall not be a force fit in the plastic. Split tubular stiffeners shall not be used.

4. Plastic piping joints and fittings for use in liquefied petroleum gas piping systems shall be in accordance with NFPA 58.

SECTION 2415
PIPING SYSTEM INSTALLATION

2415.1 ***Installation of materials.*** *All materials used shall be installed in strict accordance with the standards under which the materials are accepted and approved. In the absence of such installation procedures, the manufacturer's instructions shall be followed. Where the requirements of referenced standards or manufacturer's instructions do not conform to minimum provisions of this code, the provisions of this code shall apply.*

***2415.1.1 CSST**. CSST piping systems shall be installed in accordance with the terms of their approval, the conditions of listing, the manufactuerer's instructions and this code.*

2415.1.2 **Prohibited locations.** Piping shall not be installed in or through a ducted supply, return or exhaust, or a clothes chute, chimney or gas vent, dumbwaiter or elevator shaft. Piping installed downstream of the point of delivery shall not extend through any townhouse unit other than the unit served by such piping.

2415.2 Piping in solid partitions and walls. Concealed piping shall not be located in solid partitions and solid walls, unless installed in a chase or casing.

2415.3 Piping in concealed locations. Portions of a piping system installed in concealed locations shall not have unions, tubing fittings, right and left couplings, bushings, compression couplings, and swing joints made by combinations of fittings.

Exceptions:

1. Tubing joined by brazing.

2. Fittings listed for use in concealed locations.

2415.4 Underground penetrations prohibited. Gas piping shall not penetrate building foundation walls at any point below grade. Gas piping shall enter and exit a building at a point above grade and the annular space between the pipe and the wall shall be sealed.

2415.5 Protection against physical damage. In concealed locations, where piping other than black or galvanized steel is installed through holes or notches in wood studs, joists, rafters or similar members less than 1½ inches (38 mm) from the nearest edge of the member, the pipe shall be protected by shield plates. Protective steel shield plates having a minimum thickness of 0.0575-inch (1.463 mm) (No. 16 Gage) shall cover the area of the pipe where the member is notched or bored and shall extend a minimum of 4 inches (102 mm) above sole plates, below top plates and to each side of a stud, joist or rafter.

2415.6 Piping in solid floors. Piping in solid floors shall be laid in channels in the floor and covered in a manner that will allow access to the piping with a

minimum amount of damage to the building. Where such piping is subject to exposure to excessive moisture or corrosive substances, the piping shall be protected in an approved manner. As an alternative to installation in channels, the piping shall be installed in a conduit of Schedule 40 steel, wrought iron, PVC or ABS pipe in accordance with Section 2415.6.1 or 2415.6.2.

2415.6.1 Conduit with one end terminating outdoors. The conduit shall extend into an occupiable portion of the building and, at the point where the conduit terminates in the building, the space between the conduit and the gas piping shall be sealed to prevent the possible entrance of any gas leakage. The conduit shall extend not less than 2 inches (51 mm) beyond the point where the pipe emerges from the floor. If the end sealing is capable of withstanding the full pressure of the gas pipe, the conduit shall be designed for the same pressure as the pipe. Such conduit shall extend not less than 4 inches (102 mm) outside of the building, shall be vented above grade to the outdoors and shall be installed to prevent the entrance of water and insects.

2415.6.2 Conduit with both ends terminating indoors. Where the conduit originates and terminates within the same building, the conduit shall originate and terminate in an accessible portion of the building and shall not be sealed. The conduit shall extend not less than 2 inches (51 mm) beyond the point where the pipe emerges from the floor.

2415.7 Above-ground piping outdoors. All piping installed outdoors shall be elevated not less than 3½ inches (152 mm) above ground and where installed across roof surfaces, shall be elevated not less than 3½ inches (152 mm) above the roof surface. Piping installed above ground, outdoors, and installed across the surface of roofs shall be securely supported and located where it will be protected from physical damage. Where passing through an outside wall, the piping shall also be protected against corrosion by coating or wrapping with an inert material. Where piping is encased in a protective pipe sleeve, the annular space between the piping and the sleeve shall be sealed.

2415.8 Isolation. Metallic piping and metallic tubing that conveys fuel gas from an LP-gas storage container shall be provided with an approved dielectric fitting to electrically isolate the underground portion of the pipe or tube from the above ground portion that enters a building. Such dielectric fitting shall be installed aboveground outdoors.

2415.9 Protection against corrosion. Metallic pipe or tubing exposed to corrosive action, such as soil condition or moisture, shall be protected in an

approved manner. Zinc coatings (galvanizing) shall not be deemed adequate protection for gas piping underground. Where dissimilar metals are joined underground, an insulating coupling or fitting shall be used. Piping shall not be laid in contact with cinders.

2415.9.1 Prohibited use. Uncoated threaded or socket welded joints shall not be used in piping in contact with soil or where internal or external crevice corrosion is known to occur.

2415.9.2 Protective coatings and wrapping. Pipe protective coatings and wrappings shall be approved for the application and shall be factory applied.

Exception: Where installed in accordance with the manufacturer's installation instructions, field application of coatings and wrappings shall be permitted for pipe nipples, fittings and locations where the factory coating or wrapping has been damaged or necessarily removed at joints.

2415.10 Minimum burial depth. Underground piping systems shall be installed a minimum depth of 12 inches (305 mm) below grade, except as provided for in Section 2415.10.1.

2415.10.1 Individual outside appliances. Individual lines to outside lights, grills or other appliances shall be installed a minimum of 8 inches (203 mm) below finished grade, provided that such installation is approved and is installed in locations not susceptible to physical damage.

2415.11 Trenches. The trench shall be graded so that the pipe has a firm, substantially continuous bearing on the bottom of the trench.

2415.12 Piping underground beneath buildings. Piping installed underground beneath buildings is prohibited except where the piping is encased in a conduit of wrought iron, plastic pipe, steel pipe or other approved conduit material designed to withstand the superimposed loads. The conduit shall be protected from corrosion in accordance with Section 2415.9 and shall be installed in accordance with Section 2415.12.1 or 2415.12.2.

2415.12.1 Conduit with one end terminating outdoors. The conduit shall extend into an occupiable portion of the building and, at the point where the conduit terminates in the building, the space between the conduit and the gas piping shall be sealed to prevent the possible entrance of any gas leakage. The conduit shall extend not less than 2 inches (51 mm) beyond the point where

the pipe emerges from the floor. Where the end sealing is capable of withstanding the full pressure of the gas pipe, the conduit shall be designed for the same pressure as the pipe. Such conduit shall extend not less than 4 inches (102 mm) outside the building, shall be vented above grade to the outdoors and shall be installed so as to prevent the entrance of water and insects.

2415.12.2 Conduit with both ends terminating indoors. Where the conduit originates and terminates within the same building, the conduit shall originate and terminate in an accessible portion of the building and shall not be sealed. The conduit shall extend not less than 2 inches (51 mm) beyond the point where the pipe emerges from the floor.

2415.13 Outlet closures. Gas outlets that do not connect to appliances shall be capped gas tight.

Exception: Listed and labeled flush-mounted-type quick-disconnect devices and listed and labeled gas convenience outlets shall be installed in accordance with the manufacturer's installation instructions.

2415.14 Location of outlets. The unthreaded portion of piping outlets shall extend not less than l inch (25 mm) through finished ceilings and walls and where extending through floors, outdoor patios and slabs, shall not be less than 2 inches (51 mm) above them. The outlet fitting or piping shall be securely supported. Outlets shall not be placed behind doors. Outlets shall be located in the room or space where the appliance is installed.

Exception: Listed and labeled flush-mounted-type quick-disconnect devices and listed and labeled gas convenience outlets shall be installed in accordance with the manufacturer's installation instructions.

2415.15 Plastic pipe. The installation of plastic pipe shall comply with Sections 2415.15.1 through 2415.15.3.

2415.15.1 Limitations. Plastic pipe shall be installed outdoors underground only. Plastic pipe shall not be used within or under any building or slab or be operated at pressures greater than 100 psig (689 kPa) for natural gas or 30 psig (207 kPa) for LP-gas.

Exceptions:

1. Plastic pipe shall be permitted to terminate above ground outside of buildings where installed in premanufactured anodeless risers or service head adapter risers that are installed in accordance with the manufacturer's installation instructions.

2. Plastic pipe shall be permitted to terminate with a wall head adapter within buildings where the plastic pipe is inserted in a piping material for fuel gas use in buildings.

3. Plastic pipe shall be permitted under outdoor patio, walkway and driveway slabs provided that the burial depth complies with Section 2415.10.

2415.15.2 Connections. Connections outdoors and underground between metallic and plastic piping shall be made only with transition fittings conforming to ASTM D 2513 Category I or ASTM F 1973.

2415.15.3 Tracer. A yellow insulated copper tracer wire or other approved conductor shall be installed adjacent to underground nonmetallic piping. Access shall be provided to the tracer wire or the tracer wire shall terminate above ground at each end of the nonmetallic piping. The tracer wire size shall not be less than 18 AWG and the insulation type shall be suitable for direct burial.

2415.16 Prohibited devices. A device shall not be placed inside the piping or fittings that will reduce the cross-sectional area or otherwise obstruct the free flow of gas.

Exception: Approved gas filters.

2415.17 Testing of piping. Before any system of piping is put in service or concealed, it shall be tested to ensure that it is gas tight. Testing, inspection and purging of piping systems shall comply with Section 2417.

SECTION 2416
PIPING BENDS AND CHANGES IN DIRECTION

2416.1 General. Changes in direction of pipe shall be permitted to be made by the use of fittings, factory bends or field bends.

2416.2 Metallic pipe. Metallic pipe bends shall comply with the following:

1. Bends shall be made only with bending tools and procedures intended for that purpose.

2. All bends shall be smooth and free from buckling, cracks or other evidence of mechanical damage.

3. The longitudinal weld of the pipe shall be near the neutral axis of the bend.

4. Pipe shall not be bent through an arc of more than 90 degrees (1.6 rad).

5. The inside radius of a bend shall be not less than six times the outside diameter of the pipe.

2416.3 Plastic pipe. Plastic pipe bends shall comply with the following:

1. The pipe shall not be damaged and the internal diameter of the pipe shall not be effectively reduced.

2. Joints shall not be located in pipe bends.

3. The radius of the inner curve of such bends shall not be less than 25 times the inside diameter of the pipe.

4. Where the piping manufacturer specifies the use of special bending tools or procedures, such tools or procedures shall be used.

SECTION 2417
INSPECTION, TESTING AND PURGING

2417.1 General. Prior to acceptance and initial operation, all piping installations shall be inspected and pressure tested to determine that the materials, design, fabrication, and installation practices comply with the requirements of this code.

2417.1.1 Inspections. Inspection shall consist of visual examination, during or after manufacture, fabrication, assembly or pressure tests as appropriate.

2417.1.2 Repairs and additions. In the event repairs or additions are made after the pressure test, the affected piping shall be tested.

Minor repairs and additions are not required to be pressure tested provided that the work is inspected and connections are tested with a noncorrosive leak-detecting fluid or other approved leak-detecting methods.

2417.1.3 New branches. Where new branches are installed to new appliances, only the newly installed branches shall be required to be pressure tested. Connections between the new piping and the existing piping shall be tested with a noncorrosive leak-detecting fluid or other approved leak-detecting methods.

2417.1.4 Section testing. A piping system shall be permitted to be tested as a complete unit or in sections. Under no circumstances shall a valve in a line be used as a bulkhead between gas in one section of the piping system and test medium in an adjacent section, unless two valves are installed in series with a valved "tell-tale" located between these valves. A valve shall not be subjected to the test pressure unless it can be determined that the valve, including the valve closing mechanism, is designed to safely withstand the test pressure.

2417.1.5 Regulators and valve assemblies. Regulator and valve assemblies fabricated independently of the piping system in which they are to be installed shall be permitted to be tested with inert gas or air at the time of fabrication.

2417.2 Test medium. The test medium shall be air, nitrogen, carbon dioxide or an inert gas. Oxygen shall not be used.

2417.3 Test preparation. Pipe joints, including welds, shall be left exposed for examination during the test.

Exception: Covered or concealed pipe end joints that have been previously tested in accordance with this code.

2417.3.1 Expansion joints. Expansion joints shall be provided with temporary restraints, if required, for the additional thrust load under test.

2417.3.2 Equipment isolation. Equipment that is not to be included in the test shall be either disconnected from the piping or isolated by blanks, blind flanges or caps.

2417.3.3 Appliance and equipment disconnection. Where the piping system is connected to appliances or equipment designed for operating pressures of

less than the test pressure, such appliances or equipment shall be isolated from the piping system by disconnecting them and capping the outlet(s).

2417.3.4 Valve isolation. Where the piping system is connected to appliances or equipment designed for operating pressures equal to or greater than the test pressure, such appliances or equipment shall be isolated from the piping system by closing the individual appliance or equipment shutoff valve(s).

2417.3.5 Testing precautions. All testing of piping systems shall be done with due regard for the safety of employees and the public during the test. Prior to testing, the interior of the pipe shall be cleared of all foreign material.

2417.4 Test pressure measurement. Test pressure shall be measured with a manometer or with a pressure-measuring device designed and calibrated to read, record, or indicate a pressure loss caused by leakage during the pressure test period. The source of pressure shall be isolated before the pressure tests are made. Mechanical gauges used to measure test pressures shall have a range such that the highest end of the scale is not greater than five times the test pressure.

2417.4.1 Test pressure. The test pressure to be used shall be not less than one and one-half times the proposed maximum working pressure, but not less than 3 psig (20 kPa gauge), irrespective of design pressure. Where the test pressure exceeds 125 psig (862 kPa gauge), the test pressure shall not exceed a value that produces a hoop stress in the piping greater than 50 percent of the specified minimum yield strength of the pipe.

2417.4.2 Test duration. The test duration shall be not less than 10 minutes.

2417.5 Detection of leaks and defects. The piping system shall withstand the test pressure specified without showing any evidence of leakage or other defects. Any reduction of test pressures as indicated by pressure gauges shall be deemed to indicate the presence of a leak unless such reduction can be readily attributed to some other cause.

2417.5.1 Detection methods. The leakage shall be located by means of an approved combustible gas detector, a noncorrosive leak detection fluid or an equivalent nonflammable solution. Matches, candles, open flames or other methods that could provide a source of ignition shall not be used.

2417.5.2 Corrections. Where leakage or other defects are located, the affected portion of the piping system shall be repaired or replaced and retested.

2417.6 Piping system and equipment leakage check. Leakage checking of systems and equipment shall be in accordance with Sections 2417.6.1 through 2417.6.4.

2417.6.1 Test gases. Fuel gas shall be permitted to be used for leak checks in piping systems that have been tested in accordance with Section 2417.

2417.6.2 Turning gas on. During the process of turning gas on into a system of new gas piping, the entire system shall be inspected to determine that there are no open fittings or ends and that all valves at unused outlets are closed and plugged or capped.

2417.6.3 Leak check. Immediately after the gas is turned on into a new system or into a system that has been initially restored after an interruption of service, the piping system shall be checked for leakage. Where leakage is indicated, the gas supply shall be shut off until the necessary repairs have been made.

2417.6.4 Placing appliances and equipment in operation. Appliances and equipment shall not be placed in operation until after the piping system has been checked for leakage and determined to be free of leakage and purged in accordance with Section 2417.7.2.

2417.7 Purging requirements. *The purging of piping shall be in accordance with Sections 2417.7.1 through 2417.7.3*

2417.7.1 Piping systems required to be purged outdoors. *The purging of piping systems shall be in accordance with the provisions of Sections 2417.7.1.1 through 2417.7.1.4 where the piping system meets either of the following:*

1. *The design operating gas pressure is greater than 2 psig.*

2. *The piping being purged contains one or more sections of pie or tubing greater than 2 inches in nominal size and exceeding the lengths in Table 2417.7.1.1.*

2417.7.1.1 Removal from service. *Where existing gas piping is opened, the section that is opened shall be isolated from the gas supply and the line pressure vented in accordance with Section 2417.7.1.3. Where gas piping meeting the criteria of Table 2417.7.1.1 is removed from service, the residual fuel gas in the piping shall be displaced with an inert gas.*

TABLE 2417.7.1.1
SIZE AND LENGTH OF PIPING

Nominal Pipe Size (inches)	***Length of Piping (feet)***
2.5	***>50***
3	***>30***
4	***>15***
6	***>10***
8 or larger	***Any length***

For SI units: 1 inch = 25.4 mm; 1 ft = 304.8 mm.

2417.7.1.2 Placing in operation. *Where gas piping containing air and meeting the criteria of Table 2417.7.1.1 is placed in operation, the air in the piping shall first be displaced with an inert gas. The inert gas shall then be displaced with fuel gas in accordance with Section 2417.7.1.3.*

2417.7.1.3 Outdoor discharge of purged gases. *The open end of a piping system being pressure vented or purged shall discharge directly to an outdoor location. Purging operations shall comply with all of the following requirements.*

1. *The point of discharge shall be controlled with a shutoff valve.*

2. *The point of discharge shall be located at least 10 feet from sources of ignition, at least 10 feet from building openings and at least 25 feet from mechanical air intake openings.*

3. *During discharge, the open point of discharge shall be continuously attended and monitored with a combustible gas indicator that complies with Section 2417.7.1.4.*

4. *Purging operations introducing fuel gas shall be stopped when 90% fuel gas by volume is detected within the pipe.*

5. *Persons not involved in the purging operations shall be evacuated from all areas within 10 ft of the point of discharge.*

2417.7.1.4 Combustible gas indicator. *The combustible gas indicator used during purging operations shall be listed and shall be calibrated in accordance with the manufacturer's instructions and recommended schedule. The combustible gas indicator used for pipe discharge monitoring shall numerically display a volume scale from 0% to 100% with a resolution of not greater than 1% increments.*

2417.7.2 Piping systems allowed to be purged indoors or outdoors. *The purging of piping systems shall be in accordance with the provisions of Section 2417.7.2.1 where the piping system meets both of the following:*

1. *The design operating gas pressure is 2 psig or less.*

2. *The piping being purged is constructed entirely from pipe or tubing of 2 inch nominal size or smaller, or larger size pipe or tubing with lengths shorter than specified in Table 2417.7.1.1.*

2417.7.2.1 Purging procedure. *The piping system shall be purged in accordance with one or more of the following:*

1. *The piping shall be purged with fuel gas and shall discharge to the outdoors.*

2. *The piping shall be purged with fuel gas and shall discharge to the indoors or outdoors through an appliance burner not located in a combustion chamber. Such burner shall be provided with a continuous source of ignition.*

3. *The piping shall be purged with fuel gas and shall discharge to the indoors or outdoors through a burner that has a continuous source of ignition and that is designed for such purpose.*

4. *The piping shall be purged with fuel gas that is discharged to the indoors or outdoors, and the point of discharge shall be monitored with a listed combustible gas detector in accordance with 2417.7.2.2. Purging shall be stopped when fuel gas is detected.*

5. *The piping shall be purged by the gas supplier in accordance with written procedures.*

2417.7.2.2 Combustible gas detector. *The combustible gas detector used during purging operations shall be listed and shall be calibrated or tested in accordance with the manufacturer's instructions and recommended schedule. The combustible gas detector used for pipe discharge monitoring shall indicate the presence of fuel gas.*

2417.7.3 Purging appliances and equipment. *After the piping system has been placed in operation, appliances and equipment shall be purged before being placed into operation.*

SECTION 2418
PIPING SUPPORT

2418.1 General. Piping shall be provided with support in accordance with Section 2418.2.

2418.2 Design and installation. Piping shall be supported with metal pipe hooks, metal pipe straps, metal bands, metal brackets, metal hangers or building structural components suitable for the size of piping, of adequate strength and quality, and located at intervals so as to prevent or damp out excessive vibration. Piping shall be anchored to prevent undue strains on connected appliances and shall not be supported by other piping. Pipe hangers and supports shall conform to the requirements of MSS SP-58 and shall be spaced in accordance with Section 2424. Supports, hangers and anchors shall be installed so as not to interfere with the free expansion and contraction of the piping between anchors. All parts of the supporting equipment shall be designed and installed so that they will not be disengaged by movement of the supported piping.

SECTION 2419
DRIPS AND SLOPED PIPING

2419.1 Slopes. Piping for other than dry gas conditions shall be sloped not less than 0.25 inch in 15 feet (6.4 mm in 4572 mm) to prevent traps.

2419.2 Drips. Where wet gas exists, a drip shall be provided at any point in the line of pipe where condensate could collect. A drip shall also be provided at the outlet of the meter and shall be installed so as to constitute a trap wherein an

accumulation of condensate will shut off the flow of gas before the condensate will run back into the meter.

2419.3 Location of drips. Drips shall be provided with ready access to permit cleaning or emptying. A drip shall not be located where the condensate is subject to freezing.

2419.4 Sediment trap. Where a sediment trap is not incorporated as part of the appliance, a sediment trap shall be installed downstream of the appliance shutoff valve as close to the inlet of the appliance as practical. The sediment trap shall be either a tee fitting having a capped nipple of any length installed vertically in the bottom-most opening of the tee or other device approved as an effective sediment trap. Illuminating appliances, ranges, clothes dryers and outdoor grills need not be so equipped.

SECTION 2420
GAS SHUTOFF VALVES

2420.1 General. Piping systems shall be provided with shutoff valves in accordance with this section.

2420.1.1 Valve approval. Shutoff valves shall be of an approved type; shall be constructed of materials compatible with the piping; and shall comply with the standard that is applicable for the pressure and application, in accordance with Table 2420.1.1.

2420.1.2 Prohibited locations. Shutoff valves shall be prohibited in concealed locations and furnace plenums.

2420.1.3 Access to shutoff valves. Shutoff valves shall be located in places so as to provide access for operation and shall be installed so as to be protected from damage.

2420.2 Meter valve. Every meter shall be equipped with a shutoff valve located on the supply side of the meter.

2420.3 Individual buildings. In a common system serving more than one building, shutoff valves shall be installed outdoors at each building.

2420.4 MP regulator valves. A listed shutoff valve shall be installed immediately ahead of each MP regulator.

2420.5 Appliance shutoff valve. Each appliance shall be provided with a shutoff valve in accordance with Section 2420.5.1, 2420.5.2 or 2420.5.3.

2420.5.1 Located within same room. The shutoff valve shall be located in the same room as the appliance. The shutoff valve shall be within 6 feet (1829 mm) of the appliance, and shall be installed upstream of the union, connector or quick disconnect device it serves. Such shutoff valves shall be provided with access. Appliance shutoff valves located in the firebox of a fireplace shall be installed in accordance with the appliance manufacturer's instructions.

2420.5.2 Vented decorative appliances and room heaters. Shutoff valves for vented decorative appliances, room heaters and decorative appliances for installation in vented fireplaces shall be permitted to be installed in an area remote from the appliances where such valves are provided with ready access. Such valves shall be permanently identified and shall serve no other appliance. The piping from the shutoff valve to within 6 feet (1829 mm) of the appliance shall be designed, sized and installed in accordance with Sections 2412 through 2419.

2420.5.3 Located at manifold. Where the appliance shutoff valve is installed at a manifold, such shutoff valve shall be located within 50 feet (15 240 mm) of the appliance served and shall be readily accessible and permanently identified. The piping from the manifold to within 6 feet (1829 mm) of the appliance shall be designed, sized and installed in accordance with Sections 2412 through 2419.

SECTION 2421
FLOW CONTROLS

2421.1 Pressure regulators. A line pressure regulator shall be installed where the appliance is designed to operate at a lower pressure than the supply pressure. Line gas pressure regulators shall be listed as complying with ANSI Z21.80. Access shall be provided to pressure regulators. Pressure regulators shall be protected from physical damage. Regulators installed on the exterior of the building shall be approved for outdoor installation.

2421.2 MP regulators. MP pressure regulators shall comply with the following:

1. The MP regulator shall be approved and shall be suitable for the inlet and outlet gas pressures for the application.

2. The MP regulator shall maintain a reduced outlet pressure under lockup (no-flow) conditions.

3. The capacity of the MP regulator, determined by published ratings of its manufacturer, shall be adequate to supply the appliances served.

4. The MP pressure regulator shall be provided with access. Where located indoors, the regulator shall be vented to the outdoors or shall be equipped with a leak-limiting device, in either case complying with Section 2421.3.

5. A tee fitting with one opening capped or plugged shall be installed between the MP regulator and its upstream shutoff valve. Such tee fitting shall be positioned to allow connection of a pressure measuring instrument and to serve as a sediment trap.

6. A tee fitting with one opening capped or plugged shall be installed not less than 10 pipe diameters downstream of the MP regulator outlet. Such tee fitting shall be positioned to allow connection of a pressure measuring instrument.

TABLE 2420.1.1
MANUAL GAS VALVE STANDARDS

VALVE STANDARDS	APPLIANCE SHUTOFF VALVE APPLICATION UP TO ½ psig PRESSURE	OTHER VALVE APPLICATIONS			
		UP TO ½ psig PRESSURE	UP TO 2 psig PRESSURE	UP TO 5 psig PRESSURE	UP TO 125 psig PRESSURE
ANSI Z21.15	X	—	—	—	—
CSA Requirement 3-88	X	X	X[a]	X[b]	—
ASME B16.44	X	X	X[a]	X[b]	—
ASME B16.33	X	X	X	X	X

For SI: 1 pound per square inch gauge = 6.895 kPa.
a. If labeled 2G.
b. If labeled 5G.

2421.3 Venting of regulators. Pressure regulators that require a vent shall be vented directly to the outdoors. The vent shall be designed to prevent the entry of insects, water and foreign objects.

Exception: A vent to the outdoors is not required for regulators equipped with and labeled for utilization with an approved vent-limiting device installed in accordance with the manufacturer's instructions.

2421.3.1 Vent piping. Vent piping for relief vents and breather vents shall be constructed of materials allowed for gas piping in accordance with Section 2414. Vent piping shall be not smaller than the vent connection on the pressure regulating device. Vent piping serving relief vents and combination relief and breather vents shall be run independently to the outdoors and shall serve only a single device vent. Vent piping serving only breather vents is permitted to be connected in a manifold arrangement where sized in accordance with an approved design that minimizes back pressure in the event of diaphragm rupture. Regulator vent piping shall not exceed the length specified in the regulator manufacturer's installation instructions.

SECTION 2422
APPLIANCE CONNECTIONS

2422.1 Connecting appliances. Appliances shall be connected to the piping system by one of the following:

1. Rigid metallic pipe and fittings.

2. Corrugated stainless steel tubing (CSST) where installed in accordance with the manufacturer's instructions.

3. Listed and labeled appliance connectors in compliance with ANSI Z21.24 and installed in accordance with the manufacturer's installation instructions and located entirely in the same room as the appliance.

4. Listed and labeled quick-disconnect devices used in conjunction with listed and labeled appliance connectors.

5. Listed and labeled convenience outlets used in conjunction with listed and labeled appliance connectors.

6. Listed and labeled outdoor appliance connectors in compliance with ANSI Z21.75/CSA 6.27 and installed in accordance with the manufacturer's installation instructions.

2422.1.1 Protection from damage. Connectors and tubing shall be installed so as to be protected against physical damage.

2422.1.2 Connector installation. Appliance fuel connectors shall be installed in accordance with the manufacturer's instructions and Sections 24221.2.1 through 2422.1.2.4.

2422.1.2.1 Maximum length. Connectors shall not exceed 6 feet (1829 mm) in overall length. Measurement shall be made along the centerline of the connector. Only one connector shall be used for each appliance.

Exception: Rigid metallic piping used to connect an appliance to the piping system shall be permitted to have a total length greater than 6 feet (1829 mm) provided that the connecting pipe is sized as part of the piping system in accordance with Section 2413 and the location of the appliance shutoff valve complies with Section 2420.5.

2422.1.2.2 Minimum size. Connectors shall have the capacity for the total demand of the connected appliance.

2422.1.2.3 Prohibited locations and penetrations. Connectors shall not be concealed within, or extended through, walls, floors, partitions, ceilings or appliance housings.

Exceptions:

1. Connectors constructed of materials allowed for piping systems in accordance with Section 2414 shall be permitted to pass through walls, floors, partitions and ceilings where installed in accordance with Section 2420.5.2 or 2420.5.3.

2. Rigid steel pipe connectors shall be permitted to extend through openings in appliance housings.

3. Fireplace inserts that are factory equipped with grommets, sleeves or other means of protection in accordance with the listing of the appliance.

4. Semirigid tubing and listed connectors shall be permitted to extend through an opening in an appliance housing, cabinet or

casing where the tubing or connector is protected against damage.

2422.1.2.4 Shutoff valve. A shutoff valve not less than the nominal size of the connector shall be installed ahead of the connector in accordance with Section 2420.5.

2422.1.3 Connection of gas engine-powered ~~air conditioners~~ *equipment and appliances*. Internal combustion engines shall not be rigidly connected to the gas supply piping.

2422.1.4 Unions. A union fitting shall be provided for appliances connected by rigid metallic pipe. Such unions shall be accessible and located within 6 feet (1829 mm) of the appliance.

2422.1.5 Movable appliances. Where appliances are equipped with casters or are otherwise subject to periodic movement or relocation for purposes such as routine cleaning and maintenance, such appliances shall be connected to the supply system piping by means of an approved flexible connector designed and labeled for the application. Such flexible connectors shall be installed and protected against physical damage in accordance with the manufacturer's installation instructions.

2422.2 Suspended low-intensity infrared tube heaters. Suspended low-intensity infrared tube heaters shall be connected to the building piping system with a connector listed for the application complying with ANSI Z21.24/CGA 6.10. The connector shall be installed as specified by the tube heater manufacturer's instructions.

SECTION 2423
CNG GAS-DISPENSING SYSTEMS

2423.1 General. Motor fuel-dispensing facilities for CNG fuel shall be in accordance with Section 413 of the International Fuel Gas Code.

SECTION 2424
PIPING SUPPORT INTERVALS

2424.1 Interval of support. Piping shall be supported at intervals not exceeding the spacing specified in Table 2424.1. Spacing of supports for CSST shall be in accordance with the CSST manufacturer's instructions.

TABLE 2424.1
SUPPORT OF PIPING

STEEL PIPE, NOMINAL SIZE OF PIPE (inches)	SPACING OF SUPPORTS (feet)	NOMINAL SIZE OF TUBING SMOOTH-WALL (inch O.D.)	SPACING OF SUPPORTS (feet)
½	6	½	4
¾ or 1	8	$^{5}/_{8}$ or ¾	6
1¼ or larger (horizontal)	10	$^{7}/_{8}$ or 1 (horizontal)	8
1¼ or larger (vertical)	Every floor level	1 or larger (vertical)	Every floor level

For SI: 1 inch = 25.4 mm, 1 foot = 304.8 mm.

SECTION 2425
GENERAL

2425.1 Scope. This section shall govern the installation, maintenance, repair and approval of factory-built and masonry chimneys, chimney liners, vents and connectors serving gas-fired appliances.

2425.2 General. Every appliance shall discharge the products of combustion to the outdoors, except for appliances exempted by Section 2425.8.

2425.3 Masonry chimneys. Masonry chimneys shall be constructed in accordance with Section 2427.5 and Chapter 10.

2425.4 Minimum size of chimney or vent. Chimneys and vents shall be sized in accordance with Sections 2427 and 2428.

2425.5 Abandoned inlet openings. Abandoned inlet openings in chimneys and vents shall be closed by an approved method.

2425.6 Positive pressure. Where an appliance equipped with a mechanical forced draft system creates a positive pressure in the venting system, the venting system shall be designed for positive pressure applications.

2425.7 Connection to fireplace. Connection of appliances to chimney flues serving fireplaces shall be in accordance with Sections 2425.7.1 through 2425.7.3.

2425.7.1 Closure and access. A noncombustible seal shall be provided below the point of connection to prevent entry of room air into the flue. Means shall be provided for access to the flue for inspection and cleaning.

2425.7.2 Connection to factory-built fireplace flue. An appliance shall not be connected to a flue serving a factory-built fireplace unless the appliance is specifically listed for such installation. The connection shall be made in accordance with the appliance manufacturer's installation instructions.

2425.7.3 Connection to masonry fireplace flue. A connector shall extend from the appliance to the flue serving a masonry fireplace such that the flue gases are exhausted directly into the flue. The connector shall be accessible or removable for inspection and cleaning of both the connector and the flue. Listed direct connection devices shall be installed in accordance with their listing.

2425.8 Appliances not required to be vented. The following appliances shall not be required to be vented:

1. Ranges.

2. Built-in domestic cooking units listed and marked for optional venting.

3. Hot plates and laundry stoves.

4. Type 1 clothes dryers (Type 1 clothes dryers shall be exhausted in accordance with the requirements of Section 2439).
5. Refrigerators.

6. Counter appliances.

7. Room heaters listed for unvented use.

Where the appliances listed in Items 5 through 7 above are installed so that the aggregate input rating exceeds 20 Btu per hour per cubic foot (207 W/m^3) of volume of the room or space in which such appliances are installed, one or more shall be provided with venting systems or other approved means for conveying the vent gases to the outdoor atmosphere so that the aggregate input rating of the remaining unvented appliances does not exceed 20 Btu per hour per cubic foot (207 W/m^3). Where the room or space in which the appliance is installed is directly connected to another room or space by a doorway, archway or other

opening of comparable size that cannot be closed, the volume of such adjacent room or space shall be permitted to be included in the calculations.

2425.9 Chimney entrance. Connectors shall connect to a masonry chimney flue at a point not less than 12 inches (305 mm) above the lowest portion of the interior of the chimney flue.

2425.10 Connections to exhauster. Appliance connections to a chimney or vent equipped with a power exhauster shall be made on the inlet side of the exhauster. Joints on the positive pressure side of the exhauster shall be sealed to prevent flue-gas leakage as specified by the manufacturer's installation instructions for the exhauster.

2425.11 Masonry chimneys. Masonry chimneys utilized to vent appliances shall be located, constructed and sized as specified in the manufacturer's installation instructions for the appliances being vented and Section 2427.

2425.12 Residential and low-heat appliances flue lining systems. Flue lining systems for use with residential-type and low-heat appliances shall be limited to the following:

1. Clay flue lining complying with the requirements of ASTM C 315 or equivalent. Clay flue lining shall be installed in accordance with Chapter 10.

2. Listed chimney lining systems complying with UL 1777.

3. Other approved materials that will resist, without cracking, softening or corrosion, flue gases and condensate at temperatures up to 1,800°F (982°C).

2425.13 Category I appliance flue lining systems. Flue lining systems for use with Category I appliances shall be limited to the following:

1. Flue lining systems complying with Section 2425.12.

2. Chimney lining systems listed and labeled for use with appliances with draft hoods and other Category I gas appliances listed and labeled for use with Type B vents.

2425.14 Category II, III and IV appliance venting systems. The design, sizing and installation of vents for Category II, III and IV appliances shall be in accordance with the appliance manufacturer's installation instructions.

2425.15 Existing chimneys and vents. Where an appliance is permanently disconnected from an existing chimney or vent, or where an appliance is connected to an existing chimney or vent during the process of a new installation, the chimney or vent shall comply with Sections 2425.15.1 through 2425.15.4.

2425.15.1 Size. The chimney or vent shall be resized as necessary to control flue gas condensation in the interior of the chimney or vent and to provide the appliance or appliances served with the required draft. For Category I appliances, the resizing shall be in accordance with Section 2426.

2425.15.2 Flue passageways. The flue gas passageway shall be free of obstructions and combustible deposits and shall be cleaned if previously used for venting a solid or liquid fuel-burning appliance or fireplace. The flue liner, chimney inner wall or vent inner wall shall be continuous and shall be free of cracks, gaps, perforations, or other damage or deterioration that would allow the escape of combustion products, including gases, moisture and creosote.

2425.15.3 Cleanout. Masonry chimney flues shall be provided with a cleanout opening having a minimum height of 6 inches (152 mm). The upper edge of the opening shall be located not less than 6 inches (152 mm) below the lowest chimney inlet opening. The cleanout shall be provided with a tight-fitting, noncombustible cover.

2425.15.4 Clearances. Chimneys and vents shall have airspace clearance to combustibles in accordance with Chapter 10 and the chimney or vent manufacturer's installation instructions.

Exception: Masonry chimneys without the required air-space clearances shall be permitted to be used if lined or relined with a chimney lining system listed for use in chimneys with reduced clearances in accordance with UL 1777. The chimney clearance shall be not less than that permitted by the terms of the chimney liner listing and the manufacturer's instructions.

2425.15.4.1 Fireblocking. Noncombustible fireblocking shall be provided in accordance with Chapter 10.

SECTION 2426
VENTS

2426.1 General. All vents, except as provided in Section 2427.7, shall be listed and labeled. Type B and BW vents shall be tested in accordance with UL 441. Type L vents shall be tested in accordance with UL 641. Vents for Category II and III appliances shall be tested in accordance with UL 1738. Plastic vents for Category IV appliances shall not be required to be listed and labeled where such vents are as specified by the appliance manufacturer and are installed in accordance with the appliance manufacturer's installation instructions.

2426.2 Connectors required. Connectors shall be used to connect appliances to the vertical chimney or vent, except where the chimney or vent is attached directly to the appliance. Vent connector size, material, construction and installation shall be in accordance with Section 2427.

2426.3 Vent application. The application of vents shall be in accordance with Table 2427.4.

2426.4 Insulation shield. Where vents pass through insulated assemblies, an insulation shield constructed of steel having a minimum thickness of 0.0187 inch (0.4712 mm) (26 gage) shall be installed to provide clearance between the vent and the insulation material. The clearance shall not be less than the clearance to combustibles specified by the vent manufacturer's installation instructions. Where vents pass through attic space, the shield shall terminate not less than 2 inches (51 mm) above the insulation materials and shall be secured in place to prevent displacement. Insulation shields provided as part of a listed vent system shall be installed in accordance with the manufacturer's installation instructions.

2426.5 Installation. Vent systems shall be sized, installed and terminated in accordance with the vent and appliance manufacturer's installation instructions and Section 2427.

2426.6 Support of vents. All portions of vents shall be adequately supported for the design and weight of the materials employed.

2426.7 Protection against physical damage. In concealed locations, where a vent is installed through holes or notches in studs, joists, rafters or similar members less than 1½ inches (38 mm) from the nearest edge of the member, the vent shall be protected by shield plates. Protective steel shield plates having a minimum thickness of 0.0575-inch (1.463 mm) (16 gage) shall cover the area of

the vent where the member is notched or bored and shall extend a minimum of 4 inches (102 mm) above sole plates, below top plates and to each side of a stud, joist or rafter.

SECTION 2427
VENTING OF APPLIANCES

2427.1 General. This section recognizes that the choice of venting materials and the methods of installation of venting systems are dependent on the operating characteristics of the appliance being vented. The operating characteristics of vented appliances can be categorized with respect to: (1) positive or negative pressure within the venting system; and (2) whether or not the appliance generates flue or vent gases that might condense in the venting system. See Section 2403 for the definitions of these vented appliance categories.

2427.2 Venting systems required. Except as permitted in Sections 2427.2.1, 2427.2.2 and 2425.8, all appliances shall be connected to venting systems.

2427.2.1 Direct-vent appliances. Listed direct-vent appliances shall be installed in accordance with the manufacturer's instructions and Section 2427.8, Item 3.

2427.2.2 Appliances with integral vents. Appliances incorporating integral venting means shall be considered properly vented where installed in accordance with the manufacturer's instructions and Section 2427.8, Items 1 and 2.

2427.3 Design and construction. A venting system shall be designed and constructed so as to develop a positive flow adequate to convey flue or vent gases to the outdoors.

2427.3.1 Appliance draft requirements. A venting system shall satisfy the draft requirements of the appliance in accordance with the manufacturer's instructions.

2427.3.2 Design and construction. Appliances required to be vented shall be connected to a venting system designed and installed in accordance with the provisions of Sections 2427.4 through 2427.16.

2427.3.3 Mechanical draft systems. Mechanical draft systems shall comply with the following:

1. Mechanical draft systems shall be listed and shall be installed in accordance with the manufacturer's installation instructions for both the appliance and the mechanical draft system.

2. Appliances, except incinerators, requiring venting shall be permitted to be vented by means of mechanical draft systems of either forced or induced draft design.

3. Forced draft systems and all portions of induced draft systems under positive pressure during operation shall be designed and installed so as to prevent leakage of flue or vent gases into a building.

4. Vent connectors serving appliances vented by natural draft shall not be connected into any portion of mechanical draft systems operating under positive pressure.

5. Where a mechanical draft system is employed, provisions shall be made to prevent the flow of gas to the main burners when the draft system is not performing so as to satisfy the operating requirements of the appliance for safe performance.

6. The exit terminals of mechanical draft systems shall be not less than 7 feet (2134 mm) above finished ground level where located adjacent to public walkways and shall be located as specified in Section 2427.8, Items 1 and 2.

2427.3.4 Air ducts and furnace plenums. Venting systems shall not extend into or pass through any fabricated air duct or furnace plenum

2427.3.5 Above-ceiling air-handling spaces. Where a venting system passes through an above-ceiling air-handling space or other nonducted portion of an air-handling system, the venting system shall conform to one of the following requirements:

1. The venting system shall be a listed special gas vent; other venting system serving a Category III or Category IV appliance; or other positive pressure vent, with joints sealed in accordance with the appliance or vent manufacturer's instructions.

2. The venting system shall be installed such that fittings and joints between sections are not installed in the above-ceiling space.

3. The venting system shall be installed in a conduit or enclosure with sealed joints separating the interior of the conduit or enclosure from the ceiling space.

2427.4 Type of venting system to be used. The type of venting system to be used shall be in accordance with Table 2427.4.

2427.4.1 Plastic piping. Plastic piping used for venting appliances listed for use with such venting materials shall be approved.

2427.4.1.1 (IFGS) Plastic vent joints. Plastic pipe and fittings used to vent appliances shall be installed in accordance with the appliance manufacturer's installation instructions. Where a primer is required, it shall be of a contrasting color.

2427.4.2 Special gas vent. Special gas vent shall be listed and installed in accordance with the special gas vent manufacturer's installation instructions.

2427.5 Masonry, metal and factory-built chimneys. Masonry, metal and factory-built chimneys shall comply with Sections 2427.5.1 through 2427.5.9.

2427.5.1 Factory-built chimneys. Factory-built chimneys shall be installed in accordance with the manufacturer's installation instructions. Factory-built chimneys used to vent appliances that operate at a positive vent pressure shall be listed for such application.

2427.5.2 Masonry chimneys. Masonry chimneys shall be built and installed in accordance with NFPA 211 and shall be lined with approved clay flue lining, a listed chimney lining system or other approved material that will resist corrosion, erosion, softening or cracking from vent gases at temperatures up to 1,800°F (982°C).

Exception: Masonry chimney flues serving listed gas appliances with draft hoods, Category I appliances and other gas appliances listed for use with Type B vents shall be permitted to be lined with a chimney lining system specifically listed for use only with such appliances. The liner shall be installed in accordance with the liner manufacturer's installation instructions. A permanent identifying label shall be attached at the point

where the connection is to be made to the liner. The label shall read: "This chimney liner is for appliances that burn gas only. Do not connect to solid or liquid fuel-burning appliances or incinerators."

TABLE 2427.4
TYPE OF VENTING SYSTEM TO BE USED

APPLIANCES	TYPE OF VENTING SYSTEM
Listed Category I appliances Listed appliances equipped with draft hood Appliances listed for use with Type B gas vent	Type B gas vent (Section 2427.6) Chimney (Section 2427.5) Single-wall metal pipe (Section 2427.7) Listed chimney lining system for gas venting (Section 2427.5.2) Special gas vent listed for these appliances (Section 2427.4.2)
Listed vented wall furnaces	Type B-W gas vent (Sections 2427.6, 2436)
Category II appliances	As specified or furnished by manufacturers of listed appliances (Sections 2427.4.1, 2427.4.2)
Category III appliances	As specified or furnished by manufacturers of listed appliances (Sections 2427.4.1, 2427.4.2)
Category IV appliances	As specified or furnished by manufacturers of listed appliances (Sections 2427.4.1, 2427.4.2)
Unlisted appliances	Chimney (Section 2427.5)
Decorative appliances in vented fireplaces	Chimney
Direct-vent appliances	See Section 2427.2.1
Appliances with integral vent	See Section 2427.2.2

2427.5.3 Chimney termination. Chimneys for residential-type or low-heat appliances shall extend at least 3 feet (914 mm) above the highest point where they pass through a roof of a building and at least 2 feet (610 mm) higher than any portion of a building within a horizontal distance of 10 feet (3048 mm) (see Figure 2427.5.3). Chimneys for medium-heat appliances shall extend at least 10 feet (3048 mm) higher than any portion of any building within 25 feet (7620 mm). Chimneys shall extend at least 5 feet (1524 mm) above the highest connected appliance draft hood outlet or flue collar. Decorative shrouds shall not be installed at the termination of factory-built chimneys except where such shrouds are listed and labeled for use with the specific factory-built chimney system and are installed in accordance with the manufacturer's installation instructions.

2427.5.4 Size of chimneys. The effective area of a chimney venting system serving listed appliances with draft hoods, Category I appliances, and other appliances listed for use with Type B vents shall be determined in accordance with one of the following methods:

1. The provisions of Section 2428.

2. For sizing an individual chimney venting system for a single appliance with a draft hood, the effective areas of the vent connector and chimney flue shall be not less than the area of the appliance flue collar or draft hood outlet, nor greater than seven times the draft hood outlet area.

3. For sizing a chimney venting system connected to two appliances with draft hoods, the effective area of the chimney flue shall be not less than the area of the larger draft hood outlet plus 50 percent of the area of the smaller draft hood outlet, nor greater than seven times the smallest draft hood outlet area.

4. Chimney venting systems using mechanical draft shall be sized in accordance with approved engineering methods.

5. Other approved engineering methods.

2427.5.5 Inspection of chimneys. Before replacing an existing appliance or connecting a vent connector to a chimney, the chimney passageway shall be examined to ascertain that it is clear and free of obstructions and it shall be cleaned if previously used for venting solid or liquid fuel-burning appliances or fireplaces.

2427.5.5.1 Chimney lining. Chimneys shall be lined in accordance with NFPA 211.

Exception: Where an existing chimney complies with Sections 2427.5.5 through 2427.5.5.3 and its sizing is in accordance with Section 2427.5.4, its continued use shall be allowed where the appliance vented by that chimney is replaced by an appliance of similar type, input rating and efficiency.

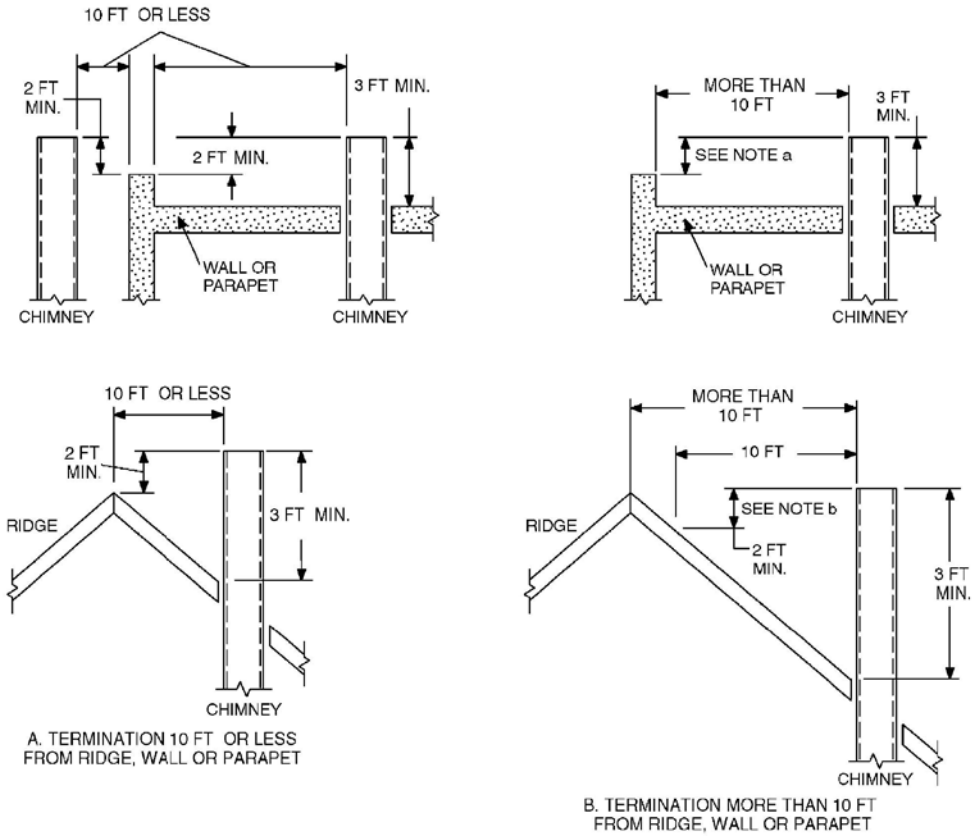

For SI: 1 inch = 25.4 mm, 1 foot = 304.8 mm.

NOTES:

a. No height above parapet required when distance from walls or parapet is more than 10 feet.

b. Height above any roof surface within 10 feet horizontally.

FIGURE 2427.5.3
TYPICAL TERMINATION LOCATIONS FOR CHIMNEYS AND SINGLE-WALL METAL PIPES SERVING RESIDENTIAL-TYPE AND LOW-HEAT APPLIANCES

2427.5.5.2 Cleanouts. Cleanouts shall be examined to determine that they will remain tightly closed when not in use.

2427.5.5.3 Unsafe chimneys. Where inspection reveals that an existing chimney is not safe for the intended application, it shall be repaired, rebuilt, lined, relined or replaced with a vent or chimney to conform to NFPA 211 and it shall be suitable for the appliances to be vented.

2427.5.6 Chimneys serving appliances burning other fuels. Chimneys serving appliances burning other fuels shall comply with Sections 2427.5.6.1 through 2427.5.6.4.

2427.5.6.1 Solid fuel-burning appliances. An appliance shall not be connected to a chimney flue serving a separate appliance designed to burn solid fuel.

2427.5.6.2 Liquid fuel-burning appliances. Where one chimney flue serves gas appliances and liquid fuel-burning appliances, the appliances shall be connected through separate openings or shall be connected through a single opening where joined by a suitable fitting located as close as practical to the chimney. Where two or more openings are provided into one chimney flue, they shall be at different levels. Where the appliances are automatically controlled, they shall be equipped with safety shutoff devices.

2427.5.6.3 Combination gas-and solid fuel-burning appliances. A combination gas-and solid fuel-burning appliance equipped with a manual reset device to shut off gas to the main burner in the event of sustained backdraft or flue gas spillage shall be permitted to be connected to a single chimney flue. The chimney flue shall be sized to properly vent the appliance.

2427.5.6.4 Combination gas-and oil fuel-burning appliances. A listed combination gas-and oil fuel-burning appliance shall be permitted to be connected to a single chimney flue. The chimney flue shall be sized to properly vent the appliance.

2427.5.7 Support of chimneys. All portions of chimneys shall be supported for the design and weight of the materials employed. Factory-built chimneys shall be supported and spaced in accordance with the manufacturer's installation instructions.

2427.5.8 Cleanouts. Where a chimney that formerly carried flue products from liquid or solid fuel-burning appliances is used with an appliance using fuel gas, an accessible cleanout shall be provided. The cleanout shall have a tight-fitting cover and be installed so its upper edge is at least 6 inches (152 mm) below the lower edge of the lowest chimney inlet opening.

2427.5.9 Space surrounding lining or vent. The remaining space surrounding a chimney liner, gas vent, special gas vent or plastic piping installed within a masonry chimney flue shall not be used to vent another appliance. The insertion of another liner or vent within the chimney as provided in this code and the liner or vent manufacturer's instructions shall not be prohibited.

The remaining space surrounding a chimney liner, gas vent, special gas vent or plastic piping installed within a masonry, metal or factory-built chimney shall not be used to supply combustion air. Such space shall not be prohibited from supplying combustion air to direct-vent appliances designed for installation in a solid fuel-burning fireplace and installed in accordance with the manufacturer's installation instructions.

2427.6 Gas vents. Gas vents shall comply with Sections 2427.6.1 through 2427.6.11. (See Section 2403, Definitions.)

2427.6.1 Installation, general. Gas vents shall be installed in accordance with the terms of their listings and the manufacturer's instructions.

2427.6.2 Type B-W vent capacity. A Type B-W gas vent shall have a listed capacity not less than that of the listed vented wall furnace to which it is connected.

2427.6.3 Gas vent termination. A gas vent shall terminate in accordance with one of the following:

1. Gas vents that are 12 inches (305 mm) or less in size and located not less than 8 feet (2438 mm) from a vertical wall or similar obstruction shall terminate above the roof in accordance with Figure 2427.6.3.

2. Gas vents that are over 12 inches (305 mm) in size or are located less than 8 feet (2438 mm) from a vertical wall or similar obstruction shall terminate not less than 2 feet (610 mm) above the highest point where they pass through the roof and not less than 2 feet (610 mm) above any portion of a building within 10 feet (3048 mm) horizontally.

3. As provided for direct-vent systems in Section 2427.2.1.

4. As provided for appliances with integral vents in Section 2427.2.2.

5. As provided for mechanical draft systems in Section 2427.3.3.

2427.6.3.1 Decorative shrouds. Decorative shrouds shall not be installed at the termination of gas vents except where such shrouds are listed for use with the specific gas venting system and are installed in accordance with manufacturer's installation instructions.

2427.6.4 Minimum height. A Type B or L gas vent shall terminate at least 5 feet (1524 mm) in vertical height above the highest connected appliance draft hood or flue collar. A Type B-W gas vent shall terminate at least 12 feet (3658 mm) in vertical height above the bottom of the wall furnace.

2427.6.5 Roof terminations. Gas vents shall extend through the roof flashing, roof jack or roof thimble and terminate with a listed cap or listed roof assembly.

2427.6.6 Forced air inlets. Gas vents shall terminate not less than 3 feet (914 mm) above any forced air inlet located within 10 feet (3048 mm).

2427.6.7 Exterior wall penetrations. A gas vent extending through an exterior wall shall not terminate adjacent to the wall or below eaves or parapets, except as provided in Sections 2427.2.1 and 2427.3.3.

2427.6.8 Size of gas vents. Venting systems shall be sized and constructed in accordance with Section 2428 or other approved engineering methods and the gas vent and appliance manufacturer's installation instructions.

2427.6.8.1 Category I appliances. The sizing of natural draft venting systems serving one or more listed appliances equipped with a draft hood or appliances listed for use with Type B gas vent, installed in a single story of a building, shall be in accordance with one of the following methods:

1. The provisions of Section 2428.

2. For sizing an individual gas vent for a single, draft-hood-equipped appliance, the effective area of the vent connector and the gas vent shall be not less than the area of the appliance draft hood outlet, nor greater than seven times the draft hood outlet area.

3. For sizing a gas vent connected to two appliances with draft hoods, the effective area of the vent shall be not less than the area of the

ROOF SLOPE	H (minimum) ft

larger draft hood outlet plus 50 percent of the area of the smaller draft hood outlet, nor greater than seven times the smaller draft hood outlet area.

4. Approved engineering practices.

2427.6.8.2 Vent offsets. Type B and L vents sized in accordance with Item 2 or 3 of Section 2427.6.8.1 shall extend in a generally vertical direction with offsets not exceeding 45 degrees (0.79 rad), except that a vent system having not more than one 60-degree (1.04 rad) offset shall be permitted. Any angle greater than 45 degrees (0.79 rad) from the vertical is considered horizontal. The total horizontal distance of a vent plus the horizontal vent connector serving draft hood-equipped appliances shall be not greater than 75 percent of the vertical height of the vent.

2427.6.8.3 Category II, III and IV appliances. The sizing of gas vents for Category II, III and IV appliances shall be in accordance with the appliance manufacturer's instructions.

2427.6.8.4 Mechanical draft. Chimney venting systems using mechanical draft shall be sized in accordance with approved engineering methods.

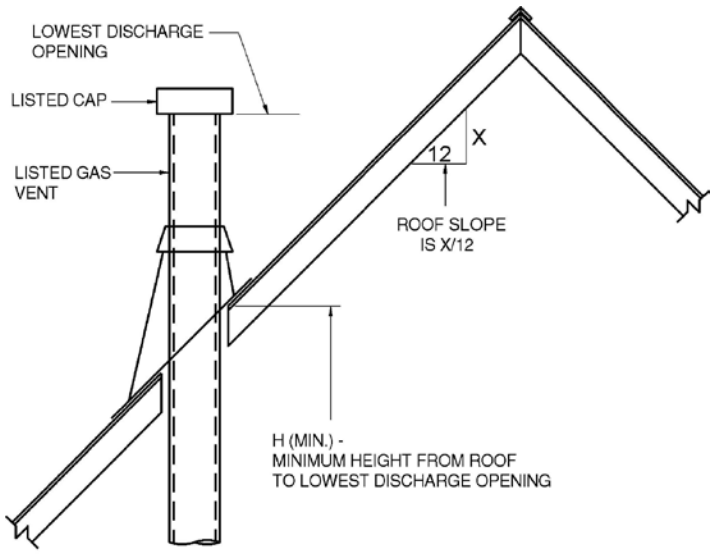

Flat to 6/12	1.0
Over 6/12 to 7/12	1.25
Over 7/12 to 8/12	1.5
Over 8/12 to 9/12	2.0
Over 9/12 to 10/12	2.5
Over 10/12 to 11/12	3.25
Over 11/12 to 12/12	4.0
Over 12/12 to 14/12	5.0
Over 14/12 to 16/12	6.0
Over 16/12 to 18/12	7.0
Over 18/12 to 20/12	7.5
Over 20/12 to 21/12	8.0

For SI: 1 foot = 304.8 mm.

FIGURE 2427.6.3
GAS VENT TERMINATION LOCATIONS FOR LISTED CAPS 12 INCHES OR LESS IN SIZE AT LEAST 8 FEET FROM A VERTICAL WALL

2427.6.9 Support of gas vents. Gas vents shall be supported and spaced in accordance with the manufacturer's installation instructions.

2427.6.10 Marking. In those localities where solid and liquid fuels are used extensively, gas vents shall be permanently identified by a label attached to the wall or ceiling at a point where the vent connector enters the gas vent. The determination of where such localities exist shall be made by the *building* official. The label shall read:
"This gas vent is for appliances that burn gas. Do not connect to solid or liquid fuel-burning appliances or incinerators."

2427.6.11 Fastener penetrations. Screws, rivets and other fasteners shall not penetrate the inner wall of double-wall gas vents, except at the transition from an appliance draft hood outlet, a flue collar or a single-wall metal connector to a double-wall vent.

2427.7 Single-wall metal pipe. Single-wall metal pipe vents shall comply with Sections 2427.7.1 through 2427.7.13.

2427.7.1 Construction. Single-wall metal pipe shall be constructed of galvanized sheet steel not less than 0.0304 inch (0.7 mm) thick, or other approved, noncombustible, corrosion-resistant material.

2427.7.2 Cold climate. Uninsulated single-wall metal pipe shall not be used outdoors for venting appliances in regions where the 99-percent winter design temperature is below 32ºF (0ºC).

2427.7.3 Termination. Single-wall metal pipe shall terminate at least 5 feet (1524 mm) in vertical height above the highest connected appliance draft hood outlet or flue collar. Single-wall metal pipe shall extend at least 2 feet (610 mm) above the highest point where it passes through a roof of a building and at least 2 feet (610 mm) higher than any portion of a building within a horizontal distance of 10 feet (3048 mm) (see Figure 2427.5.3). An approved cap or roof assembly shall be attached to the terminus of a single-wall metal pipe (see also Section 2427.7.9, Item 3).

2427.7.4 Limitations of use. Single-wall metal pipe shall be used only for runs directly from the space in which the appliance is located through the roof or exterior wall to the outdoor atmosphere.

2427.7.5 Roof penetrations. A pipe passing through a roof shall extend without interruption through the roof flashing, roof jack, or roof thimble. Where a single-wall metal pipe passes through a roof constructed of combustible material, a noncombustible, nonventilating thimble shall be used at the point of passage. The thimble shall extend at least 18 inches (457 mm) above and 6 inches (152 mm) below the roof with the annular space open at the bottom and closed only at the top. The thimble shall be sized in accordance with Section 2427.7.7.

2427.7.6 Installation. Single-wall metal pipe shall not originate in any unoccupied attic or concealed space and shall not pass through any attic, inside wall, concealed space, or floor. The installation of a single-wall metal pipe through an exterior combustible wall shall comply with Section 2427.7.7. Single-wall metal pipe used for venting an incinerator shall be exposed and readily examinable for its full length and shall have suitable clearances maintained.

2427.7.7 Single-wall penetrations of combustible walls. Single-wall metal pipe shall not pass through a combustible exterior wall unless guarded at the point of passage by a ventilated metal thimble not smaller than the following:

1. For listed appliances equipped with draft hoods and appliances listed for use with Type B gas vents, the thimble shall be not less than 4 inches (102 mm) larger in diameter than the metal pipe. Where there is a run of not less than 6 feet (1829 mm) of metal pipe in the open between the draft hood outlet and the thimble, the thimble shall be permitted to be not less than 2 inches (51 mm) larger in diameter than the metal pipe.

2. For unlisted appliances having draft hoods, the thimble shall be not less than 6 inches (152 mm) larger in diameter than the metal pipe.

3. For residential and low-heat appliances, the thimble shall be not less than 12 inches (305 mm) larger in diameter than the metal pipe.

Exception: In lieu of thimble protection, all combustible material in the wall shall be removed a sufficient distance from the metal pipe to provide the specified clearance from such metal pipe to combustible material. Any material used to close up such opening shall be noncombustible.

2427.7.8 Clearances. Minimum clearances from single-wall metal pipe to combustible material shall be in accordance with Table 2427.10.5. The clearance from single-wall metal pipe to combustible material shall be permitted to be reduced where the combustible material is protected as specified for vent connectors in Table 2409.2.

2427.7.9 Size of single-wall metal pipe. A venting system constructed of single-wall metal pipe shall be sized in accordance with one of the following methods and the appliance manufacturer's instructions:

1. For a draft-hood-equipped appliance, in accordance with Section 2428.

2. For a venting system for a single appliance with a draft hood, the areas of the connector and the pipe each shall be not less than the area of the appliance flue collar or draft hood outlet, whichever is smaller. The vent area shall not be greater than seven times the draft hood outlet area.

3. Other approved engineering methods.

2427.7.10 Pipe geometry. Any shaped single-wall metal pipe shall be permitted to be used, provided that its equivalent effective area is equal to the effective area of the round pipe for which it is substituted, and provided that the minimum internal dimension of the pipe is not less than 2 inches (51 mm).

2427.7.11 Termination capacity. The vent cap or a roof assembly shall have a venting capacity not less than that of the pipe to which it is attached.

2427.7.12 Support of single-wall metal pipe. All portions of single-wall metal pipe shall be supported for the design and weight of the material employed.

2427.7.13 Marking. Single-wall metal pipe shall comply with the marking provisions of Section 2427.6.10.

2427.8 Venting system termination location. The location of venting system terminations shall comply with the following (see Appendix C):

1. A mechanical draft venting system shall terminate at least 3 feet (914 mm) above any forced-air inlet located within 10 feet (3048 mm).

   Exceptions:

   1. This provision shall not apply to the combustion air intake of a direct-vent appliance.

   2. This provision shall not apply to the separation of the integral outdoor air inlet and flue gas discharge of listed outdoor appliances.

2. A mechanical draft venting system, excluding direct-vent appliances, shall terminate at least 4 feet (1219 mm) below, 4 feet (1219 mm) horizontally from, or 1 foot (305 mm) above any door, operable window, or gravity air inlet into any building. The bottom of the vent terminal shall be located at least 12 inches (305 mm) above finished ground level.

3. The vent terminal of a direct-vent appliance with an input of 10,000 Btu per hour (3 kW) or less shall be located at least 6 inches (152 mm) from any air opening into a building, and such an appliance with an input over 10,000 Btu per hour (3 kW) but not over 50,000 Btu per hour (14.7 kW) shall be installed with a 9-inch (230 mm) vent termination clearance, and

an appliance with an input over 50,000 Btu/h (14.7 kW) shall have at least a 12-inch (305 mm) vent termination clearance. The bottom of the vent terminal and the air intake shall be located at least 12 inches (305 mm) above finished ground level.

4. Through-the-wall vents for Category II and IV appliances and noncategorized condensing appliances shall not terminate over public walkways or over an area where condensate or vapor could create a nuisance or hazard or could be detrimental to the operation of regulators, relief valves, or other equipment. Where local experience indicates that condensate is a problem with Category I and III appliances, this provision shall also apply. Drains for condensate shall be installed in accordance with the manufacturer's installation instructions.

2427.9 Condensation drainage. Provisions shall be made to collect and dispose of condensate from venting systems serving Category II and IV appliances and noncategorized condensing appliances in accordance with Section 2427.8, Item 4. Where local experience indicates that condensation is a problem, provision shall be made to drain off and dispose of condensate from venting systems serving Category I and III appliances in accordance with Section 2427.8, Item 4.

2427.10 Vent connectors for Category I appliances. Vent connectors for Category I appliances shall comply with Sections 2427.10.1 through 2427.10.14.

2427.10.1 Where required. A vent connector shall be used to connect an appliance to a gas vent, chimney or single-wall metal pipe, except where the gas vent, chimney or single-wall metal pipe is directly connected to the appliance.

2427.10.2 Materials. Vent connectors shall be constructed in accordance with Sections 2427.10.2.1 through 2427.10.2.4.

2427.10.2.1 General. A vent connector shall be made of noncombustible corrosion-resistant material capable of withstanding the vent gas temperature produced by the appliance and of sufficient thickness to withstand physical damage.

2427.10.2.2 Vent connectors located in unconditioned areas. Where the vent connector used for an appliance having a draft hood or a Category I appliance is located in or passes through attics, crawl spaces or other unconditioned spaces, that portion of the vent connector shall be listed

Type B, Type L or listed vent material having equivalent insulation properties.

Exception: Single-wall metal pipe located within the exterior walls of the building in areas having a local 99-percent winter design temperature of 5°F (-15°C) or higher shall be permitted to be used in unconditioned spaces other than attics and crawl spaces.

2427.10.2.3 Residential-type appliance connectors. Where vent connectors for residential-type appliances are not installed in attics or other unconditioned spaces, connectors for listed appliances having draft hoods, appliances having draft hoods and equipped with listed conversion burners and Category I appliances shall be one of the following:

1. Type B or L vent material;

2. Galvanized sheet steel not less than 0.018 inch (0.46 mm) thick;

3. Aluminum (1100 or 3003 alloy or equivalent) sheet not less than 0.027 inch (0.69 mm) thick;

4. Stainless steel sheet not less than 0.012 inch (0.31 mm) thick;

5. Smooth interior wall metal pipe having resistance to heat and corrosion equal to or greater than that of Item 2, 3 or 4 above; or

6. A listed vent connector.

Vent connectors shall not be covered with insulation.

Exception: Listed insulated vent connectors shall be installed in accordance with the manufacturer's installation instructions.

2427.10.2.4 Low-heat appliance. A vent connector for a nonresidential, low-heat appliance shall be a factory-built chimney section or steel pipe having resistance to heat and corrosion equivalent to that for the appropriate galvanized pipe as specified in Table 2427.10.2.4. Factory-built chimney sections shall be joined together in accordance with the chimney manufacturer’s instructions.

TABLE 2427.10.2.4
MINIMUM THICKNESS FOR GALVANIZED STEEL VENT CONNECTORS FOR LOW-HEAT APPLIANCES

DIAMETER OF CONNECTOR (inches)	MINIMUM THICKNESS (inch)
Less than 6	0.019
6 to less than 10	0.023
10 to 12 inclusive	0.029
14 to 16 inclusive	0.034
Over 16	0.056

For SI: 1 inch = 25.4 mm.

2427.10.3 Size of vent connector. Vent connectors shall be sized in accordance with Sections 2427.10.3.1 through 2427.3.5.

2427.10.3.1 Single draft hood and fan-assisted. A vent connector for an appliance with a single draft hood or for a Category I fan-assisted combustion system appliance shall be sized and installed in accordance with Section 2428 or other approved engineering methods.

2427.10.3.2 Multiple draft hood. For a single appliance having more than one draft hood outlet or flue collar, the manifold shall be constructed according to the instructions of the appliance manufacturer. Where there are no instructions, the manifold shall be designed and constructed in accordance with approved engineering practices. As an alternate method, the effective area of the manifold shall equal the combined area of the flue collars or draft hood outlets and the vent connectors shall have a minimum 1-foot (305 mm) rise.

2427.10.3.3 Multiple appliances. Where two or more appliances are connected to a common vent or chimney, each vent connector shall be sized in accordance with Section 2428 or other approved engineering methods.

As an alternative method applicable only when all of the appliances are draft hood equipped, each vent connector shall have an effective area not less than the area of the draft hood outlet of the appliance to which it is connected.

2427.10.3.4 Common connector/manifold. Where two or more appliances are vented through a common vent connector or vent manifold, the common vent connector or vent manifold shall be located at the

highest level consistent with available headroom and the required clearance to combustible materials and shall be sized in accordance with Section 2428 or other approved engineering methods.

As an alternate method applicable only where there are two draft hood-equipped appliances, the effective area of the common vent connector or vent manifold and all junction fittings shall be not less than the area of the larger vent connector plus 50 percent of the area of the smaller flue collar outlet.

2427.10.3.5 Size increase. Where the size of a vent connector is increased to overcome installation limitations and obtain connector capacity equal to the appliance input, the size increase shall be made at the appliance draft hood outlet.

2427.10.4 Two or more appliances connected to a single vent or chimney. Where two or more vent connectors enter a common gas vent, chimney flue, or single-wall metal pipe, the smaller connector shall enter at the highest level consistent with the available headroom or clearance to combustible material. Vent connectors serving Category I appliances shall not be connected to any portion of a mechanical draft system operating under positive static pressure, such as those serving Category III or IV appliances.

2427.10.4.1 Two or more openings. Where two or more openings are provided into one chimney flue or vent, the openings shall be at different levels, or the connectors shall be attached to the vertical portion of the chimney or vent at an angle of 45 degrees (0.79 rad) or less relative to the vertical.

2427.10.5 Clearance. Minimum clearances from vent connectors to combustible material shall be in accordance with Table 2427.10.5.

Exception: The clearance between a vent connector and combustible material shall be permitted to be reduced where the combustible material is protected as specified for vent connectors in Table 2409.2.

2427.10.6 Flow resistance. A vent connector shall be installed so as to avoid turns or other construction features that create excessive resistance to flow of vent gases.

TABLE 2427.10.5[a]
CLEARANCES FOR CONNECTORS

APPLIANCE	MINIMUM DISTANCE FROM COMBUSTIBLE MATERIAL			
	Listed Type B gas vent material	**Listed Type L vent material**	**Single-wall metal pipe**	**Factory-built chimney sections**
Listed appliances with draft hoods and appliances listed for use with Type B gas vents	As listed	As listed	6 inches	As listed
Residential boilers and furnaces with listed gas conversion burner and with draft hood	6 inches	6 inches	9 inches	As listed
Residential appliances listed for use with Type L vents	Not permitted	As listed	9 inches	As listed
Listed gas-fired toilets	Not permitted	As listed	As listed	As listed
Unlisted residential appliances with draft hood	Not permitted	6 inches	9 inches	As listed
Residential and low-heat appliances other than above	Not permitted	9 inches	18 inches	As listed
Medium-heat appliances	Not permitted	Not permitted	36 inches	As listed

For SI: 1 inch = 25.4 mm.

a. These clearances shall apply unless the manufacturer's installation instructions for a listed appliance or connector specify different clearances, in which case the listed clearances shall apply.

2427.10.7 Joints. Joints between sections of connector piping and connections to flue collars and draft hood outlets shall be fastened by one of the following methods:

1. Sheet metal screws.

2. Vent connectors of listed vent material assembled and connected to flue collars or draft hood outlets in accordance with the manufacturers' instructions.

3. Other approved means.

2427.10.8 Slope. A vent connector shall be installed without dips or sags and shall slope upward toward the vent or chimney at least 1/4 inch per foot (21 mm/m).

Exception: Vent connectors attached to a mechanical draft system installed in accordance with the appliance and draft system manufacturers' instructions.

2427.10.9 Length of vent connector. A vent connector shall be as short as practical and the appliance located as close as practical to the chimney or vent. The maximum horizontal length of a single-wall connector shall be 75 percent of the height of the chimney or vent except for engineered systems. The maximum horizontal length of a Type B double-wall connector shall be 100 percent of the height of the chimney or vent except for engineered systems.

2427.10.10 Support. A vent connector shall be supported for the design and weight of the material employed to maintain clearances and prevent physical damage and separation of joints.

2427.10.11 Chimney connection. Where entering a flue in a masonry or metal chimney, the vent connector shall be installed above the extreme bottom to avoid stoppage. Where a thimble or slip joint is used to facilitate removal of the connector, the connector shall be firmly attached to or inserted into the thimble or slip joint to prevent the connector from falling out. Means shall be employed to prevent the connector from entering so far as to restrict the space between its end and the opposite wall of the chimney flue (see Section 2425.9).

2427.10.12 Inspection. The entire length of a vent connector shall be provided with ready access for inspection, cleaning, and replacement.

2427.10.13 Fireplaces. A vent connector shall not be connected to a chimney flue serving a fireplace unless the fireplace flue opening is permanently sealed.

2427.10.14 Passage through ceilings, floors or walls. Single-wall metal pipe connectors shall not pass through any wall, floor or ceiling except as permitted by Section 2427.7.4.

2427.11 Vent connectors for Category II, III and IV appliances. Vent connectors for Category II, III and IV appliances shall be as specified for the venting systems in accordance with Section 2427.4.

2427.12 Draft hoods and draft controls. The installation of draft hoods and draft controls shall comply with Sections 2427.12.1 through 2427.12.7.

2427.12.1 Appliances requiring draft hoods. Vented appliances shall be installed with draft hoods.

Exception: Dual oven-type combination ranges; incinerators; direct-vent appliances; fan-assisted combustion system appliances; appliances requiring chimney draft for operation; single firebox boilers equipped with conversion burners with inputs greater than 400,000 Btu per hour (117 kW); appliances equipped with blast, power or pressure burners that are

not listed for use with draft hoods; and appliances designed for forced venting.

2427.12.2 Installation. A draft hood supplied with or forming a part of a listed vented appliance shall be installed without alteration, exactly as furnished and specified by the appliance manufacturer.

2427.12.2.1 Draft hood required. If a draft hood is not supplied by the appliance manufacturer where one is required, a draft hood shall be installed, shall be of a listed or approved type and, in the absence of other instructions, shall be of the same size as the appliance flue collar. Where a draft hood is required with a conversion burner, it shall be of a listed or approved type.

2427.12.2.2 Special design draft hood. Where it is determined that a draft hood of special design is needed or preferable for a particular installation, the installation shall be in accordance with the recommendations of the appliance manufacturer and shall be approved.

2427.12.3 Draft control devices. Where a draft control device is part of the appliance or is supplied by the appliance manufacturer, it shall be installed in accordance with the manufacturer's instructions. In the absence of manufacturer's instructions, the device shall be attached to the flue collar of the appliance or as near to the appliance as practical.

2427.12.4 Additional devices. Appliances (except incinerators) requiring a controlled chimney draft shall be permitted to be equipped with a listed double-acting barometric-draft regulator installed and adjusted in accordance with the manufacturer's instructions.

2427.12.5 Location. Draft hoods and barometric draft regulators shall be installed in the same room or enclosure as the appliance in such a manner as to prevent any difference in pressure between the hood or regulator and the combustion air supply.

2427.12.6 Positioning. Draft hoods and draft regulators shall be installed in the position for which they were designed with reference to the horizontal and vertical planes and shall be located so that the relief opening is not obstructed by any part of the appliance or adjacent construction. The appliance and its draft hood shall be located so that the relief opening is accessible for checking vent operation.

2427.12.7 Clearance. A draft hood shall be located so its relief opening is not less than 6 inches (152 mm) from any surface except that of the appliance it serves and the venting system to which the draft hood is connected. Where a greater or lesser clearance is indicated on the appliance label, the clearance shall be not less than that specified on the label. Such clearances shall not be reduced.

2427.13 Manually operated dampers. A manually operated damper shall not be placed in the vent connector for any appliance. Fixed baffles shall not be classified as manually operated dampers.

2427.14 Automatically operated vent dampers. An automatically operated vent damper shall be of a listed type.

2427.15 Obstructions. Devices that retard the flow of vent gases shall not be installed in a vent connector, chimney, or vent. The following shall not be considered as obstructions:

1. Draft regulators and safety controls specifically listed for installation in venting systems and installed in accordance with the manufacturer's installation instructions.

2. Approved draft regulators and safety controls that are designed and installed in accordance with approved engineering methods.

3. Listed heat reclaimers and automatically operated vent dampers installed in accordance with the manufacturer's installation instructions.

4. Approved economizers, heat reclaimers, and recuperators installed in venting systems of appliances not required to be equipped with draft hoods, provided that the appliance manufacturer's instructions cover the installation of such a device in the venting system and performance in accordance with Sections 2427.3 and 2427.3.1 is obtained.

5. Vent dampers serving listed appliances installed in accordance with Sections 2428.2.1 and 2428.3.1 or other approved engineering methods.

2427.16 (IFGS) Outside wall penetrations. Where vents, including those for direct-vent appliances, penetrate outside walls of buildings, the annular spaces

around such penetrations shall be permanently sealed using approved materials to prevent entry of combustion products into the building.

SECTION 2428
SIZING OF CATEGORY I APPLIANCE VENTING SYSTEMS

2428.1 Definitions. The following definitions apply to tables in this section.

APPLIANCE CATEGORIZED VENT DIAMETER/AREA. The minimum vent area/diameter permissible for Category I appliances to maintain a nonpositive vent static pressure when tested in accordance with nationally recognized standards.

FAN-ASSISTED COMBUSTION SYSTEM. An appliance equipped with an integral mechanical means to either draw or force products of combustion through the combustion chamber or heat exchanger.

FAN MIN. The minimum input rating of a Category I fan-assisted appliance attached to a vent or connector.

FAN MAX. The maximum input rating of a Category I fan-assisted appliance attached to a vent or connector.

NAT MAX. The maximum input rating of a Category I draft-hood-equipped appliance attached to a vent or connector.

FAN + FAN. The maximum combined appliance input rating of two or more Category I fan-assisted appliances attached to the common vent.

FAN + NAT. The maximum combined appliance input rating of one or more Category I fan-assisted appliances and one or more Category I draft-hood-equipped appliances attached to the common vent.

NA. Vent configuration is not permitted due to potential for condensate formation or pressurization of the venting system, or not applicable due to physical or geometric restraints.

NAT + NAT. The maximum combined appliance input rating of two or more Category I draft-hood-equipped appliances attached to the common vent.

2428.2 Application of single appliance vent Tables 2428.2(1) and 2428.2(2). The application of Tables 2428.2(1) and 2428.2(2) shall be subject to the requirements of Sections 2428.2.1 through 2428.2.16.

2428.2.1 Vent obstructions. These venting tables shall not be used where obstructions, as described in Section 2427.15, are installed in the venting system. The installation of vents serving listed appliances with vent dampers shall be in accordance with the appliance manufacturer's instructions or in accordance with the following:

1. The maximum capacity of the vent system shall be determined using the "NAT Max" column.

2. The minimum capacity shall be determined as if the appliance were a fan-assisted appliance, using the "FAN Min" column to determine the minimum capacity of the vent system. Where the corresponding "FAN Min" is "NA," the vent configuration shall not be permitted and an alternative venting configuration shall be utilized.

2428.2.2 Minimum size. Where the vent size determined from the tables is smaller than the appliance draft hood outlet or flue collar, the smaller size shall be permitted to be used provided all of the following are met:

1. The total vent height (H) is at least 10 feet (3048 mm).

2. Vents for appliance draft hood outlets or flue collars 12 inches (305 mm) in diameter or smaller are not reduced more than one table size.

3. Vents for appliance draft hood outlets or flue collars larger than 12 inches (305 mm) in diameter are not reduced more than two table sizes.

4. The maximum capacity listed in the tables for a fan-assisted appliance is reduced by 10 percent (0.90 by maximum table capacity).

5. The draft hood outlet is greater than 4 inches (102 mm) in diameter. Do not connect a 3-inch-diameter (76 mm) vent to a 4-inch-diameter (102 mm) draft hood outlet. This provision shall not apply to fan-assisted appliances.

TABLE 2428.2(1)
TYPE B DOUBLE-WALL GAS VENT

Number of Appliances	Single
Appliance Type	Category I
Appliance Vent Connection	Connected directly to vent

HEIGHT (H)(feet)	LATERAL (L)(feet)	VENT DIAMETER—(*D*) inches																				
		3			4			5			6			7			8			9		
		APPLIANCE INPUT RATING IN THOUSANDS OF BTU/H																				
		FAN		NAT	FAN		NAT	FAN		NAT	FAN		NAT	FAN		NAT	FAN		NAT	FAN		NAT
		Min	Max	Max	Min	Max	Max	Min	Max	Max	Min	Max	Max	Min	Max	Max	Min	Max	Max	Min	Max	Max
6	0	0	78	46	0	152	86	0	251	141	0	375	205	0	524	285	0	698	370	0	897	470
	2	13	51	36	18	97	67	27	157	105	32	232	157	44	321	217	53	425	285	63	543	370
	4	21	49	34	30	94	64	39	153	103	50	227	153	66	316	211	79	419	279	93	536	362
	6	25	46	32	36	91	61	47	149	100	59	223	149	78	310	205	93	413	273	110	530	354
8	0	0	84	50	0	165	94	0	276	155	0	415	235	0	583	320	0	780	415	0	1,006	537
	2	12	57	40	16	109	75	25	178	120	28	263	180	42	365	247	50	483	322	60	619	418
	5	23	53	38	32	103	71	42	171	115	53	255	173	70	356	237	83	473	313	99	607	407
	8	28	49	35	39	98	66	51	164	109	64	247	165	84	347	227	99	463	303	117	596	396
10	0	0	88	53	0	175	100	0	295	166	0	447	255	0	631	345	0	847	450	0	1,096	585
	2	12	61	42	17	118	81	23	194	129	26	289	195	40	402	273	48	533	355	57	684	457
	5	23	57	40	32	113	77	41	187	124	52	280	188	68	392	263	81	522	346	95	671	446
	10	30	51	36	41	104	70	54	176	115	67	267	175	88	376	245	104	504	330	122	651	427
15	0	0	94	58	0	191	112	0	327	187	0	502	285	0	716	390	0	970	525	0	1,263	682
	2	11	69	48	15	136	93	20	226	150	22	339	225	38	475	316	45	633	414	53	815	544
	5	22	65	45	30	130	87	39	219	142	49	330	217	64	463	300	76	620	403	90	800	529
	10	29	59	41	40	121	82	51	206	135	64	315	208	84	445	288	99	600	386	116	777	507
	15	35	53	37	48	112	76	61	195	128	76	301	198	98	429	275	115	580	373	134	755	491
20	0	0	97	61	0	202	119	0	349	202	0	540	307	0	776	430	0	1,057	575	0	1,384	752
	2	10	75	51	14	149	100	18	250	166	20	377	249	33	531	346	41	711	470	50	917	612
	5	21	71	48	29	143	96	38	242	160	47	367	241	62	519	337	73	697	460	86	902	599
	10	28	64	44	38	133	89	50	229	150	62	351	228	81	499	321	95	675	443	112	877	576
	15	34	58	40	46	124	84	59	217	142	73	337	217	94	481	308	111	654	427	129	853	557
	20	48	52	35	55	116	78	69	206	134	84	322	206	107	464	295	125	634	410	145	830	537
30	0	0	100	64	0	213	128	0	374	220	0	587	336	0	853	475	0	1,173	650	0	1,548	855
	2	9	81	56	13	166	112	14	283	185	18	432	280	27	613	394	33	826	535	42	1,072	700
	5	21	77	54	28	160	108	36	275	176	45	421	273	58	600	385	69	811	524	82	1,055	688
	10	27	70	50	37	150	102	48	262	171	59	405	261	77	580	371	91	788	507	107	1,028	668
	15	33	64	NA	44	141	96	57	249	163	70	389	249	90	560	357	105	765	490	124	1,002	648

	20	56	58	NA	53	132	90	66	237	154	80	374	237	102	542	343	119	743	473	139	977	628
	30	NA	NA	NA	73	113	NA	88	214	NA	104	346	219	131	507	321	149	702	444	171	929	594
50	0	0	101	67	0	216	134	0	397	232	0	633	363	0	932	518	0	1,297	708	0	1,730	952
	2	8	86	61	11	183	122	14	320	206	15	497	314	22	715	445	26	975	615	33	1,276	813
	5	20	82	NA	27	177	119	35	312	200	43	487	308	55	702	438	65	960	605	77	1,259	798
	10	26	76	NA	35	168	114	45	299	190	56	471	298	73	681	426	86	935	589	101	1,230	773
	15	59	70	NA	42	158	NA	54	287	180	66	455	288	85	662	413	100	911	572	117	1,203	747
	20	NA	NA	NA	50	149	NA	63	275	169	76	440	278	97	642	401	113	888	556	131	1,176	722
	30	NA	NA	NA	69	131	NA	84	250	NA	99	410	259	123	605	376	141	844	522	161	1,125	670

For SI: 1 inch = 25.4 mm, 1 foot = 304.8 mm, 1 British thermal unit per hour = 0.2931 W.

TABLE 2428.2(2)
TYPE B DOUBLE-WALL GAS VENT

Number of Appliances	Single
Appliance Type	Category I
Appliance Vent Connection	Single-wall metal connector

HEIGHT (H) (feet)	LATERAL(L) (feet)	VENT DIAMETER—(*D*) inches																										
		3			4			5			6			7			8			9			10			12		
		APPLIANCE INPUT RATING IN THOUSANDS OF BTU/H																										
		FAN		NAT	FAN		NAT	FAN		NAT	FAN		NAT	FAN		NAT	FAN		NAT	FAN		NAT	FAN		NAT	FAN		NAT
		Min	Max	Max	Min	Max	Max	Min	Max	Max	Min	Max	Max	Min	Max	Max	Min	Max	Max	Min	Max	Max	Min	Max	Max	Min	Max	Max
6	0	38	77	45	59	151	85	85	249	140	126	373	204	165	522	284	211	695	369	267	894	469	371	1,118	569	537	1,639	849
	2	39	51	36	60	96	66	85	156	104	123	231	156	159	320	213	201	423	284	251	541	368	347	673	453	498	979	648
	4	NA	NA	33	74	92	63	102	152	102	146	225	152	187	313	208	237	416	277	295	533	360	409	664	443	584	971	638
	6	NA	NA	31	83	89	60	114	147	99	163	220	148	207	307	203	263	409	271	327	526	352	449	656	433	638	962	627
8	0	37	83	50	58	164	93	83	273	154	123	412	234	161	580	319	206	777	414	258	1,002	536	360	1,257	658	521	1,852	967
	2	39	56	39	59	108	75	83	176	119	121	261	179	155	363	246	197	482	321	246	617	417	339	768	513	486	1,120	743
	5	NA	NA	37	77	102	69	107	168	114	151	252	171	193	352	235	245	470	311	305	604	404	418	754	500	598	1,104	730
	8	NA	NA	33	90	95	64	122	161	107	175	243	163	223	342	225	280	458	300	344	591	392	470	740	486	665	1,089	715
10	0	37	87	53	57	174	99	82	293	165	120	444	254	158	628	344	202	844	449	253	1,093	584	351	1,373	718	507	2,031	1,057
	2	39	61	41	59	117	80	82	193	128	119	287	194	153	400	272	193	531	354	242	681	456	332	849	559	475	1,242	848
	5	52	56	39	76	111	76	105	185	122	148	277	186	190	388	261	241	518	344	299	667	443	409	834	544	584	1,224	825
	10	NA	NA	34	97	100	68	132	171	112	188	261	171	237	369	241	296	497	325	363	643	423	492	808	520	688	1,194	788
15	0	36	93	57	56	190	111	80	325	186	116	499	283	153	713	388	195	966	523	244	1,259	681	336	1,591	838	488	2,374	1,237
	2	38	69	47	57	136	93	80	225	149	115	337	224	148	473	314	187	631	413	232	812	543	319	1,015	673	457	1,491	983
	5	51	63	44	75	128	86	102	216	140	144	326	217	182	459	298	231	616	400	287	795	526	392	997	657	562	1,469	963
	10	NA	NA	39	95	116	79	128	201	131	182	308	203	228	438	284	284	592	381	349	768	501	470	966	628	664	1,433	928

	15	NA	NA	NA	NA	NA	72	158	186	124	220	290	192	272	418	269	334	568	367	404	742	484	540	937	601	750	1,399	894
20	0	35	96	60	54	200	118	78	346	201	114	537	306	149	772	428	190	1,053	573	238	1,379	750	326	1,751	927	473	2,631	1,346
	2	37	74	50	56	148	99	78	248	165	113	375	248	144	528	344	182	708	468	227	914	611	309	1,146	754	443	1,689	1,098
	5	50	68	47	73	140	94	100	239	158	141	363	239	178	514	334	224	692	457	279	896	596	381	1,126	734	547	1,665	1,074
	10	NA	NA	41	93	129	86	125	223	146	177	344	224	222	491	316	277	666	437	339	866	570	457	1,092	702	646	1,626	1,037
	15	NA	NA	NA	NA	NA	80	155	208	136	216	325	210	264	469	301	325	640	419	393	838	549	526	1,060	677	730	1,587	1,005
	20	NA	NA	NA	NA	NA	NA	186	192	126	254	306	196	309	448	285	374	616	400	448	810	526	592	1,028	651	808	1,550	973
30	0	34	99	63	53	211	127	76	372	219	110	584	334	144	849	472	184	1,168	647	229	1,542	852	312	1,971	1,056	454	2,996	1,545
	2	37	80	56	55	164	111	76	281	183	109	429	279	139	610	392	175	823	533	219	1,069	698	296	1,346	863	424	1,999	1,308
	5	49	74	52	72	157	106	98	271	173	136	417	271	171	595	382	215	806	521	269	1,049	684	366	1,324	846	524	1,971	1,283
	10	NA	NA	NA	91	144	98	122	255	168	171	397	257	213	570	367	265	777	501	327	1,017	662	440	1,287	821	620	1,927	1,234
	15	NA	NA	NA	115	131	NA	151	239	157	208	377	242	255	547	349	312	750	481	379	985	638	507	1,251	794	702	1,884	1,205
	20	NA	NA	NA	NA	NA	NA	181	223	NA	246	357	228	298	524	333	360	723	461	433	955	615	570	1,216	768	780	1,841	1,166
	30	NA	NA	NA	NA	NA	NA	NA	NA	NA	NA	NA	NA	389	477	305	461	670	426	541	895	574	704	1,147	720	937	1,759	1,101
50	0	33	99	66	51	213	133	73	394	230	105	629	361	138	928	515	176	1,292	704	220	1,724	948	295	2,223	1,189	428	3,432	1,818
	2	36	84	61	53	181	121	73	318	205	104	495	312	133	712	443	168	971	613	209	1,273	811	280	1,615	1,007	401	2,426	1,509
	5	48	80	NA	70	174	117	94	308	198	131	482	305	164	696	435	204	953	602	257	1,252	795	347	1,591	991	496	2,396	1,490
	10	NA	NA	NA	89	160	NA	118	292	186	162	461	292	203	671	420	253	923	583	313	1,217	765	418	1,551	963	589	2,347	1,455
	15	NA	NA	NA	112	148	NA	145	275	174	199	441	280	244	646	405	299	894	562	363	1,183	736	481	1,512	934	668	2,299	1,421
	20	NA	NA	NA	NA	NA	NA	176	257	NA	236	420	267	285	622	389	345	866	543	415	1,150	708	544	1,473	906	741	2,251	1,387
	30	NA	NA	NA	NA	NA	NA	NA	NA	NA	315	376	NA	373	573	NA	442	809	502	521	1,086	649	674	1,399	848	892	2,159	1,318

For SI: 1 inch = 25.4 mm, 1 foot = 304.8 mm, 1 British thermal unit per hour = 0.2931 W.

2428.2.3 Vent offsets. Single-appliance venting configurations with zero (0) lateral lengths in Tables 2428.2(1) and 2428.2(2) shall not have elbows in the venting system. Single-appliance venting configurations with lateral lengths include two 90-degree (1.57 rad) elbows. For each additional elbow up to and including 45 degrees (0.79 rad), the maximum capacity listed in the venting tables shall be reduced by 5 percent. For each additional elbow greater than 45 degrees (0.79 rad) up to and including 90 degrees (1.57 rad), the maximum capacity listed in the venting tables shall be reduced by 10 percent. Where multiple offsets occur in a vent, the total lateral length of all offsets combined shall not exceed that specified in Tables 2428.2(1) and 2428.2(2).

2428.2.4 Zero lateral. Zero (0) lateral (L) shall apply only to a straight vertical vent attached to a top outlet draft hood or flue collar.

2428.2.5 High altitude installations. Sea level input ratings shall be used when determining maximum capacity for high altitude installation. Actual input, derated for altitude, shall be used for determining minimum capacity for high altitude installation.

2428.2.6 Multiple input rate appliances. For appliances with more than one input rate, the minimum vent capacity (FAN Min) determined from the tables shall be less than the lowest appliance input rating, and the maximum vent capacity (FAN Max/NAT Max) determined from the tables shall be greater than the highest appliance rating input.

2428.2.7 Liner system sizing and connections. Listed corrugated metallic chimney liner systems in masonry chimneys shall be sized by using Table 2428.2(1) or 2428.2(2) for Type B vents with the maximum capacity reduced by 20 percent (0.80 x maximum capacity) and the minimum capacity as shown in Table 2428.2(1) or 2428.2(2). Corrugated metallic liner systems installed with bends or offsets shall have their maximum capacity further reduced in accordance with Section 2428.2.3. The 20-percent reduction for corrugated metallic chimney liner systems includes an allowance for one long-radius 90-degree (1.57 rad) turn at the bottom of the liner.

Connections between chimney liners and listed double-wall connectors shall be made with listed adapters designed for such purpose.

2428.2.8 Vent area and diameter. Where the vertical vent has a larger diameter than the vent connector, the vertical vent diameter shall be used to determine the minimum vent capacity, and the connector diameter shall be used to determine the maximum vent capacity. The flow area of the vertical vent shall not exceed seven times the flow area of the listed appliance categorized vent area, flue collar area, or draft hood outlet area unless designed in accordance with approved engineering methods.

2428.2.9 Chimney and vent locations. Tables 2428.2(1) and 2428.2(2) shall be used only for chimneys and vents not exposed to the outdoors below the roof line. A Type B vent or listed chimney lining system passing through an unused masonry chimney flue shall not be considered to be exposed to the outdoors. A Type B vent shall not be considered to be exposed to the outdoors where it passes through an unventilated enclosure or chase insulated to a value of not less than R-8.

2428.2.10 Corrugated vent connector size. Corrugated vent connectors shall be not smaller than the listed appliance categorized vent diameter, flue collar diameter, or draft hood outlet diameter.

2428.2.11 Vent connector size limitation. Vent connectors shall not be increased in size more than two sizes greater than the listed appliance categorized vent diameter, flue collar diameter or draft hood outlet diameter.

2428.2.12 Component commingling. In a single run of vent or vent connector, different diameters and types of vent and connector components shall be permitted to be used, provided that all such sizes and types are permitted by the tables.

2428.2.13 Draft hood conversion accessories. Draft hood conversion accessories for use with masonry chimneys venting listed Category I fan-assisted appliances shall be listed and installed in accordance with the manufacturer's installation instructions for such listed accessories.

2428.2.14 Table interpolation. Interpolation shall be permitted in calculating capacities for vent dimensions that fall between the table entries (see Example 3, Appendix B).

2428.2.15 Extrapolation prohibited. Extrapolation beyond the table entries shall not be permitted.

2428.2.16 Engineering calculations. For vent heights less than 6 feet (1829 mm) and greater than shown in the tables, engineering methods shall be used to calculate vent capacities.

2428.3 Application of multiple appliance vent Tables 2428.3(1) through 2428.3(4). The application of Tables 2428.3(1) through 2428.3(4) shall be subject to the requirements of Sections 2428.3.1 through 2428.3.23.

Number of Appliances	Two or more
Appliance Type	Category I
Appliance Vent Connection	Type B double-wall connector

TABLE 2428.3(1)
TYPE B DOUBLE-WALL VENT

VENT CONNECTOR CAPACITY

VENT HEIGHT (H) (feet)	CONNECTOR RISE (R) (feet)	TYPE B DOUBLE-WALL VENT AND CONNECTOR DIAMETER—(D) inches																							
		3			4			5			6			7			8			9			10		
		APPLIANCE INPUT RATING LIMITS IN THOUSANDS OF BTU/H																							
		FAN		NAT	FAN		NAT	FAN		NAT	FAN		NAT	FAN		NAT	FAN		NAT	FAN		NAT	FAN		NAT
		Min	Max	Max	Min	Max	Max	Min	Max	Max	Min	Max	Max	Min	Max	Max	Min	Max	Max	Min	Max	Max	Min	Max	Max
6	1	22	37	26	35	66	46	46	106	72	58	164	104	77	225	142	92	296	185	109	376	237	128	466	289
	2	23	41	31	37	75	55	48	121	86	60	183	124	79	253	168	95	333	220	112	424	282	131	526	345
	3	24	44	35	38	81	62	49	132	96	62	199	139	82	275	189	97	363	248	114	463	317	134	575	386
8	1	22	40	27	35	72	48	49	114	76	64	176	109	84	243	148	100	320	194	118	408	248	138	507	303
	2	23	44	32	36	80	57	51	128	90	66	195	129	86	269	175	103	356	230	121	454	294	141	564	358
	3	24	47	36	37	87	64	53	139	101	67	210	145	88	290	198	105	384	258	123	492	330	143	612	402
10	1	22	43	28	34	78	50	49	123	78	65	189	113	89	257	154	106	341	200	125	436	257	146	542	314
	2	23	47	33	36	86	59	51	136	93	67	206	134	91	282	182	109	374	238	128	479	305	149	596	372
	3	24	50	37	37	92	67	52	146	104	69	220	150	94	303	205	111	402	268	131	515	342	152	642	417
15	1	21	50	30	33	89	53	47	142	83	64	220	120	88	298	163	110	389	214	134	493	273	162	609	333
	2	22	53	35	35	96	63	49	153	99	66	235	142	91	320	193	112	419	253	137	532	323	165	658	394
	3	24	55	40	36	102	71	51	163	111	68	248	160	93	339	218	115	445	286	140	565	365	167	700	444
20	1	21	54	31	33	99	56	46	157	87	62	246	125	86	334	171	107	436	224	131	552	285	158	681	347
	2	22	57	37	34	105	66	48	167	104	64	259	149	89	354	202	110	463	265	134	587	339	161	725	414
	3	23	60	42	35	110	74	50	176	116	66	271	168	91	371	228	113	486	300	137	618	383	164	764	466
30	1	20	62	33	31	113	59	45	181	93	60	288	134	83	391	182	103	512	238	125	649	305	151	802	372
	2	21	64	39	33	118	70	47	190	110	62	299	158	85	408	215	105	535	282	129	679	360	155	840	439
	3	22	66	44	34	123	79	48	198	124	64	309	178	88	423	242	108	555	317	132	706	405	158	874	494

COMMON VENT CAPACITY

VENT HEIGHT (H) (feet)	TYPE B DOUBLE-WALL COMMON VENT DIAMETER (D)—inches																				
	4			5			6			7			8			9			10		
	COMBINED APPLIANCE INPUT RATING IN THOUSANDS OF BTU/H																				
	FAN +FAN	FAN +NAT	NAT +NAT	FAN +FAN	FAN +NAT	NAT +NAT	FAN +FAN	FAN +NAT	NAT +NAT	FAN +FAN	FAN +NAT	NAT +NAT	FAN +FAN	FAN +NAT	NAT +NAT	FAN +FAN	FAN +NAT	NAT +NAT	FAN +FAN	FAN +NAT	NAT +NAT
6	92	81	65	140	116	103	204	161	147	309	248	200	404	314	260	547	434	335	672	520	410

8	101	90	73	155	129	114	224	178	163	339	275	223	444	348	290	602	480	378	740	577	465
10	110	97	79	169	141	124	243	194	178	367	299	242	477	377	315	649	522	405	800	627	495
15	125	112	91	195	164	144	283	228	206	427	352	280	556	444	365	753	612	465	924	733	565
20	136	123	102	215	183	160	314	255	229	475	394	310	621	499	405	842	688	523	1,035	826	640
30	152	138	118	244	210	185	361	297	266	547	459	360	720	585	470	979	808	605	1,209	975	740
50	167	153	134	279	244	214	421	353	310	641	547	423	854	706	550	1,164	977	705	1,451	1,188	860

For SI: 1 inch = 25.4 mm, 1 foot = 304.8 mm, 1 British thermal unit per hour = 0.2931 W.

TABLE 2428.3(2)
TYPE B DOUBLE-WALL VENT

Number of Appliances	Two or more
Appliance Type	Category I
Appliance Vent Connection	Single-wall metal connector

VENT CONNECTOR CAPACITY

VENT HEIGHT (H) (feet)	CONNECTOR RISE (R) (feet)	SINGLE-WALL METAL VENT CONNECTOR DIAMETER—(D) inches																							
		3			4			5			6			7			8			9			10		
		APPLIANCE INPUT RATING LIMITS IN THOUSANDS OF BTU/H																							
		FAN		NAT	FAN		NAT	FAN		NAT	FAN		NAT	FAN		NAT	FAN		NAT	FAN		NAT	FAN		NAT
		Min	Max	Max	Min	Max	Max	Min	Max	Max	Min	Max	Max	Min	Max	Max	Min	Max	Max	Min	Max	Max	Min	Max	Max
6	1	NA	NA	26	NA	NA	46	NA	NA	71	NA	NA	102	207	223	140	262	293	183	325	373	234	447	463	286
	2	NA	NA	31	NA	NA	55	NA	NA	85	168	182	123	215	251	167	271	331	219	334	422	281	458	524	344
	3	NA	NA	34	NA	NA	62	121	131	95	175	198	138	222	273	188	279	361	247	344	462	316	468	574	385
8	1	NA	NA	27	NA	NA	48	NA	NA	75	NA	NA	106	226	240	145	285	316	191	352	403	244	481	502	299
	2	NA	NA	32	NA	NA	57	125	126	89	184	193	127	234	266	173	293	353	228	360	450	292	492	560	355
	3	NA	NA	35	NA	NA	64	130	138	100	191	208	144	241	287	197	302	381	256	370	489	328	501	609	400
10	1	NA	NA	28	NA	NA	50	119	121	77	182	186	110	240	253	150	302	335	196	372	429	252	506	534	308
	2	NA	NA	33	84	85	59	124	134	91	189	203	132	248	278	183	311	369	235	381	473	302	517	589	368
	3	NA	NA	36	89	91	67	129	144	102	197	217	148	257	299	203	320	398	265	391	511	339	528	637	413
15	1	NA	NA	29	79	87	52	116	138	81	177	214	116	238	291	158	312	380	208	397	482	266	556	596	324
	2	NA	NA	34	83	94	62	121	150	97	185	230	138	246	314	189	321	411	248	407	522	317	568	646	387
	3	NA	NA	39	87	100	70	127	160	109	193	243	157	255	333	215	331	438	281	418	557	360	579	690	437
20	1	49	56	30	78	97	54	115	152	84	175	238	120	233	325	165	306	425	217	390	538	276	546	664	336
	2	52	59	36	82	103	64	120	163	101	182	252	144	243	346	197	317	453	259	400	574	331	558	709	403

	3	55	62	40	87	107	72	125	172	113	190	264	164	252	363	223	326	476	294	412	607	375	570	750	457
30	1	47	60	31	77	110	57	112	175	89	169	278	129	226	380	175	296	497	230	378	630	294	528	779	358
	2	51	62	37	81	115	67	117	185	106	177	290	152	236	397	208	307	521	274	389	662	349	541	819	425
	3	54	64	42	85	119	76	122	193	120	185	300	172	244	412	235	316	542	309	400	690	394	555	855	482

COMMON VENT CAPACITY

VENT HEIGHT (H) (feet)	TYPE B DOUBLE-WALL COMMON VENT DIAMETER— (D) inches																				
	4			5			6			7			8			9			10		
	COMBINED APPLIANCE INPUT RATING IN THOUSANDS OF BTU/H																				
	FAN +FAN	FAN +NAT	NAT +NAT	FAN +FAN	FAN +NAT	NAT +NAT	FAN +FAN	FAN +NAT	NAT +NAT	FAN +FAN	FAN +NAT	NAT +NAT	FAN +FAN	FAN +NAT	NAT +NAT	FAN +FAN	FAN +NAT	NAT +NAT	FAN +FAN	FAN +NAT	NAT +NAT
6	NA	78	64	NA	113	99	200	158	144	304	244	196	398	310	257	541	429	332	665	515	407
8	NA	87	71	NA	126	111	218	173	159	331	269	218	436	342	285	592	473	373	730	569	460
10	NA	94	76	163	137	120	237	189	174	357	292	236	467	369	309	638	512	398	787	617	487
15	121	108	88	189	159	140	275	221	200	416	343	274	544	434	357	738	599	456	905	718	553
20	131	118	98	208	177	156	305	247	223	463	383	302	606	487	395	824	673	512	1,013	808	626
30	145	132	113	236	202	180	350	286	257	533	446	349	703	570	459	958	790	593	1,183	952	723
50	159	145	128	268	233	208	406	337	296	622	529	410	833	686	535	1,139	954	689	1,418	1,157	838

For SI: 1 inch = 25.4 mm, 1 foot = 304.8 mm, 1 British thermal unit per hour = 0.2931 W.

TABLE 2428.3(3)
MASONRY CHIMNEY

Number of Appliances	Two or more
Appliance Type	Category I
Appliance Vent Connection	Type B double-wall connector

VENT CONNECTOR CAPACITY

VENT HEIGHT (H) (feet)	CONNECTOR RISE (R) (feet)	TYPE B DOUBLE-WALL VENT CONNECTOR DIAMETER—(D) inches																							
		3			4			5			6			7			8			9			10		
		APPLIANCE INPUT RATING LIMITS IN THOUSANDS OF BTU/H																							
		FAN		NAT	FAN		NAT	FAN		NAT	FAN		NAT	FAN		NAT	FAN		NAT	FAN		NAT	FAN		NAT
		Min	Max	Max	Min	Max	Max	Min	Max	Max	Min	Max	Max	Min	Max	Max	Min	Max	Max	Min	Max	Max	Min	Max	Max

6	1	24	33	21	39	62	40	52	106	67	65	194	101	87	274	141	104	370	201	124	479	253	145	599	319
	2	26	43	28	41	79	52	53	133	85	67	230	124	89	324	173	107	436	232	127	562	300	148	694	378
	3	27	49	34	42	92	61	55	155	97	69	262	143	91	369	203	109	491	270	129	633	349	151	795	439
8	1	24	39	22	39	72	41	55	117	69	71	213	105	94	304	148	113	414	210	134	539	267	156	682	335
	2	26	47	29	40	87	53	57	140	86	73	246	127	97	350	179	116	473	240	137	615	311	160	776	394
	3	27	52	34	42	97	62	59	159	98	75	269	145	99	383	206	119	517	276	139	672	358	163	848	452
10	1	24	42	22	38	80	42	55	130	71	74	232	108	101	324	153	120	444	216	142	582	277	165	739	348
	2	26	50	29	40	93	54	57	153	87	76	261	129	103	366	184	123	498	247	145	652	321	168	825	407
	3	27	55	35	41	105	63	58	170	100	78	284	148	106	397	209	126	540	281	147	705	366	171	893	463
15	1	24	48	23	38	93	44	54	154	74	72	277	114	100	384	164	125	511	229	153	658	297	184	824	375
	2	25	55	31	39	105	55	56	174	89	74	299	134	103	419	192	128	558	260	156	718	339	187	900	432
	3	26	59	35	41	115	64	57	189	102	76	319	153	105	448	215	131	597	292	159	760	382	190	960	486
20	1	24	52	24	37	102	46	53	172	77	71	313	119	98	437	173	123	584	239	150	752	312	180	943	397
	2	25	58	31	39	114	56	55	190	91	73	335	138	101	467	199	126	625	270	153	805	354	184	1,011	452
	3	26	63	35	40	123	65	57	204	104	75	353	157	104	493	222	129	661	301	156	851	396	187	1,067	505

COMMON VENT CAPACITY

VENT HEIGHT (H) (feet)	MINIMUM INTERNAL AREA OF MASONRY CHIMNEY FLUE (square inches)																							
	12			19			28			38			50			63			78			113		
	COMBINED APPLIANCE INPUT RATING IN THOUSANDS OF BTU/H																							
	FAN +FAN	FAN +NAT	NAT +NAT	FAN +FAN	FAN +NAT	NAT +NAT	FAN +FAN	FAN +NAT	NAT +NAT	FAN +FAN	FAN +NAT	NAT +NAT	FAN +FAN	FAN +NAT	NAT +NAT	FAN +FAN	FAN +NAT	NAT +NAT	FAN +FAN	FAN +NAT	NAT +NAT	FAN +FAN	FAN +NAT	NAT +NAT
6	NA	74	25	NA	119	46	NA	178	71	NA	257	103	NA	351	143	NA	458	188	NA	582	246	1,041	853	NA
8	NA	80	28	NA	130	53	NA	193	82	NA	279	119	NA	384	163	NA	501	218	724	636	278	1,144	937	408
10	NA	84	31	NA	138	56	NA	207	90	NA	299	131	NA	409	177	606	538	236	776	686	302	1,226	1,010	454
15	NA	NA	36	NA	152	67	NA	233	106	NA	334	152	523	467	212	682	611	283	874	781	365	1,374	1,156	546
20	NA	NA	41	NA	NA	75	NA	250	122	NA	368	172	565	508	243	742	668	325	955	858	419	1,513	1,286	648
30	NA	NA	NA	NA	NA	NA	NA	270	137	NA	404	198	615	564	278	816	747	381	1,062	969	496	1,702	1,473	749
50	NA	NA	NA	NA	NA	NA	NA	NA	NA	NA	NA	NA	NA	620	328	879	831	461	1,165	1,089	606	1,905	1,692	922

For SI: 1 inch = 25.4 mm, 1 square inch = 645.16 mm^2, 1 foot = 304.8 mm, 1 British thermal unit per hour = 0.2931 W.

TABLE 2428.3(4)
MASONRY CHIMNEY

Number of Appliances	Two or more
Appliance Type	Category I
Appliance Vent Connection	Single-wall metal connector

VENT CONNECTOR CAPACITY

VENT HEIGHT (H) (feet)	CONNECTOR RISE (R) (feet)	SINGLE-WALL METAL VENT CONNECTOR DIAMETER (D)—inches																							
		3			4			5			6			7			8			9			10		
		APPLIANCE INPUT RATING LIMITS IN THOUSANDS OF BTU/H																							
		FAN		NAT	FAN		NAT	FAN		NAT	FAN		NAT	FAN		NAT	FAN		NAT	FAN		NAT	FAN		NAT
		Min	Max	Max	Min	Max	Max	Min	Max	Max	Min	Max	Max	Min	Max	Max	Min	Max	Max	Min	Max	Max	Min	Max	Max
6	1	NA	NA	21	NA	NA	39	NA	NA	66	179	191	100	231	271	140	292	366	200	362	474	252	499	594	316
	2	NA	NA	28	NA	NA	52	NA	NA	84	186	227	123	239	321	172	301	432	231	373	557	299	509	696	376
	3	NA	NA	34	NA	NA	61	134	153	97	193	258	142	247	365	202	309	491	269	381	634	348	519	793	437
8	1	NA	NA	21	NA	NA	40	NA	NA	68	195	208	103	250	298	146	313	407	207	387	530	263	529	672	331
	2	NA	NA	28	NA	NA	52	137	139	85	202	240	125	258	343	177	323	465	238	397	607	309	540	766	391
	3	NA	NA	34	NA	NA	62	143	156	98	210	264	145	266	376	205	332	509	274	407	663	356	551	838	450
10	1	NA	NA	22	NA	NA	41	130	151	70	202	225	106	267	316	151	333	434	213	410	571	273	558	727	343
	2	NA	NA	29	NA	NA	53	136	150	86	210	255	128	276	358	181	343	489	244	420	640	317	569	813	403
	3	NA	NA	34	97	102	62	143	166	99	217	277	147	284	389	207	352	530	279	430	694	363	580	880	459
15	1	NA	NA	23	NA	NA	43	129	151	73	199	271	112	268	376	161	349	502	225	445	646	291	623	808	366
	2	NA	NA	30	92	103	54	135	170	88	207	295	132	277	411	189	359	548	256	456	706	334	634	884	424

	3	NA	NA	34	96	112	63	141	185	101	215	315	151	286	439	213	368	586	289	466	755	378	646	945	479
20	1	NA	NA	23	87	99	45	128	167	76	197	303	117	265	425	169	345	569	235	439	734	306	614	921	347
	2	NA	NA	30	91	111	55	134	185	90	205	325	136	274	455	195	355	610	266	450	787	348	627	986	443
	3	NA	NA	35	96	119	64	140	199	103	213	343	154	282	481	219	365	644	298	461	831	391	639	1,042	496

COMMON VENT CAPACITY

/ENT HEIGHT (H) (feet)	MINIMUM INTERNAL AREA OF MASONRY CHIMNEY FLUE (square inches)																							
	12			19			28			38			50			63			78			113		
	COMBINED APPLIANCE INPUT RATING IN THOUSANDS OF BTU/H																							
	FAN +FAN	FAN +NAT	NAT +NAT	FAN +FAN	FAN +NAT	NAT +NAT	FAN +FAN	FAN +NAT	NAT +NAT	FAN +FAN	FAN +NAT	NAT +NAT	FAN +FAN	FAN +NAT	NAT +NAT	FAN +FAN	FAN +NAT	NAT +NAT	FAN +FAN	FAN +NAT	NAT +NAT	FAN +FAN	FAN +NAT	NAT +NAT
6	**NA**	**NA**	**25**	**NA**	**118**	**45**	**NA**	**176**	**71**	**NA**	**255**	**102**	**NA**	**348**	**142**	**NA**	**455**	**187**	**NA**	**579**	**245**	**NA**	**846**	**NA**
8	NA	NA	28	NA	128	52	NA	190	81	NA	276	118	NA	380	162	NA	497	217	NA	633	277	1,136	928	405
10	NA	NA	31	NA	136	56	NA	205	89	NA	295	129	NA	405	175	NA	532	234	171	680	300	1,216	1,000	450
15	NA	NA	36	NA	NA	66	NA	230	105	NA	335	150	NA	400	210	677	602	280	866	772	360	1,359	1,139	540
20	NA	NA	NA	NA	NA	74	NA	247	120	NA	362	170	NA	503	240	765	661	321	947	849	415	1,495	1,264	640
30	NA	NA	NA	NA	NA	NA	NA	NA	135	NA	398	195	NA	558	275	808	739	377	1,052	957	490	1,682	1,447	740
50	NA	NA	NA	NA	NA	NA	NA	NA	NA	NA	NA	NA	NA	612	325	NA	821	456	1,152	1,076	600	1,879	1,672	910

For SI: 1 inch = 25.4 mm, 1 square inch = 645.16 mm^2, 1 foot = 304.8 mm, 1 British thermal unit per hour = 0.2931 W.

2428.3.1 Vent obstructions. These venting tables shall not be used where obstructions, as described in Section 2427.15, are installed in the venting system. The installation of vents serving listed appliances with vent dampers shall be in accordance with the appliance manufacturer's instructions or in accordance with the following:

1. The maximum capacity of the vent connector shall be determined using the NAT Max column.

2. The maximum capacity of the vertical vent or chimney shall be determined using the FAN+NAT column when the second appliance is a fan-assisted appliance, or the NAT+NAT column when the second appliance is equipped with a draft hood.

3. The minimum capacity shall be determined as if the appliance were a fan-assisted appliance.

   3.1. The minimum capacity of the vent connector shall be determined using the FAN Min column.

   3.2. The FAN+FAN column shall be used when the second appliance is a fan-assisted appliance, and the FAN+NAT column shall be used when the second appliance is equipped with a draft hood, to determine whether the vertical vent or chimney configuration is not permitted (NA). Where the vent configuration is NA, the vent configuration shall not be permitted and an alternative venting configuration shall be utilized.

2428.3.2 Connector length limit. The vent connector shall be routed to the vent utilizing the shortest possible route. Except as provided in Section 2428.3.3, the maximum vent connector horizontal length shall be 1.5 feet (457 mm) for each inch (18 mm per mm) of connector diameter as shown in Table 2428.3.2.

TABLE 2428.3.2
MAXIMUM VENT CONNECTOR LENGTH

CONNECTOR DIAMETER	CONNECTOR HORIZONTAL
Maximum (inches)	**Length (feet)**
3	4.5
4	6
5	7.5
6	9
7	10.5
8	12
9	13.5

For SI: 1 inch = 25.4 mm, 1 foot = 304.8 mm.

2428.3.3 Connectors with longer lengths. Connectors with longer horizontal lengths than those listed in Section 2428.3.2 are permitted under the following conditions:

1. The maximum capacity (FAN Max or NAT Max) of the vent connector shall be reduced 10 percent for each additional multiple of the length listed above. For example, the maximum length listed above for a 4-inch (102 mm) connector is 6 feet (1829 mm). With a

connector length greater than 6 feet (1829 mm), but not exceeding 12 feet (3658 mm), the maximum capacity must be reduced by 10 percent (0.90 × maximum vent connector capacity). With a connector length greater than 12 feet (3658 mm), but not exceeding 18 feet (5486 mm), the maximum capacity must be reduced by 20 percent (0.80 x maximum vent capacity).

2. For a connector serving a fan-assisted appliance, the minimum capacity (FAN Min) of the connector shall be determined by referring to the corresponding single appliance table. For Type B double-wall connectors, Table 2428.2(1) shall be used. For single-wall connectors, Table 2428.2(2) shall be used. The height (H) and lateral (L) shall be measured according to the procedures for a single appliance vent, as if the other appliances were not present.

2428.3.4 Vent connector manifold. Where the vent connectors are combined prior to entering the vertical portion of the common vent to form a common vent manifold, the size of the common vent manifold and the common vent shall be determined by applying a 10-percent reduction (0.90 x maximum common vent capacity) to the common vent capacity part of the common vent tables. The length of the common vent connector manifold (L_M) shall not exceed 1½ feet for each inch (18 mm per mm) of common vent connector manifold diameter (D)

2428.3.5 Common vertical vent offset. Where the common vertical vent is offset, the maximum capacity of the common vent shall be reduced in accordance with Section 2428.3.6. The horizontal length of the common vent offset (L_o) shall not exceed 1½ feet for each inch (18 mm per mm) of common vent diameter (D). Where multiple offsets occur in a common vent, the total horizontal length of all offsets combined shall not exceed 1½ feet for each inch (18 mm/mm per) of the common vent diameter (D).

2428.3.6 Elbows in vents. For each elbow up to and including 45 degrees (0.79 rad) in the common vent, the maximum common vent capacity listed in the venting tables shall be reduced by 5 percent. For each elbow greater than 45 degrees (0.79 rad) up to and including 90 degrees (1.57 rad), the maximum common vent capacity listed in the venting tables shall be reduced by 10 percent.

2428.3.7 Elbows in connectors. The vent connector capacities listed in the common vent sizing tables include allowance for two 90-degree (1.57 rad)

elbows. For each additional elbow up to and including 45 degrees (0.79 rad), the maximum vent connector capacity listed in the venting tables shall be reduced by 5 percent. For each elbow greater than 45 degrees (0.79 rad) up to and including 90 degrees (1.57 rad), the maximum vent connector capacity listed in the venting tables shall be reduced by 10 percent.

2428.3.8 Common vent minimum size. The cross-sectional area of the common vent shall be equal to or greater than the cross-sectional area of the largest connector.

2428.3.9 Common vent fittings. At the point where tee or wye fittings connect to a common vent, the opening size of the fitting shall be equal to the size of the common vent. Such fittings shall not be prohibited from having reduced-size openings at the point of connection of appliance vent connectors.

2428.3.9.1 Tee and wye fittings. Tee and wye fittings connected to a common gas vent shall be considered as part of the common gas vent and shall be constructed of materials consistent with that of the common gas vent.

2428.3.10 High altitude installations. Sea-level input ratings shall be used when determining maximum capacity for high altitude installation. Actual input, derated for altitude, shall be used for determining minimum capacity for high altitude installation.

2428.3.11 Connector rise measurement. Connector rise (*R*) for each appliance connector shall be measured from the draft hood outlet or flue collar to the centerline where the vent gas streams come together.

2428.3.12 Vent height measurement. For multiple appliances all located on one floor, available total height (H) shall be measured from the highest draft hood outlet or flue collar up to the level of the outlet of the common vent.

2428.3.13 Vertical vent maximum size. Where two or more appliances are connected to a vertical vent or chimney, the flow area of the largest section of vertical vent or chimney shall not exceed seven times the smallest listed appliance categorized vent areas, flue collar area, or draft hood outlet area unless designed in accordance with approved engineering methods.

2428.3.14 Multiple input rate appliances. For appliances with more than one input rate, the minimum vent connector capacity (FAN Min) determined

from the tables shall be less than the lowest appliance input rating, and the maximum vent connector capacity (FAN Max or NAT Max) determined from the tables shall be greater than the highest appliance input rating.

2428.3.15 Liner system sizing and connections. Listed, corrugated metallic chimney liner systems in masonry chimneys shall be sized by using Table 2428.3(1) or 2428.3(2) for Type B vents, with the maximum capacity reduced by 20 percent (0.80 x maximum capacity) and the minimum capacity as shown in Table 2428.3(1) or 2428.3(2). Corrugated metallic liner systems installed with bends or offsets shall have their maximum capacity further reduced in accordance with Sections 2428.3.5 and 2428.3.6. The 20-percent reduction for corrugated metallic chimney liner systems includes an allowance for one long-radius 90-degree (1.57 rad) turn at the bottom of the liner. Where double-wall connectors are required, tee and wye fittings used to connect to the common vent chimney liner shall be listed double-wall fittings. Connections between chimney liners and listed double-wall fittings shall be made with listed adapter fittings designed for such purpose.

2428.3.16 Chimney and vent location. Tables 2428.3(1), 2428.3(2), 2428.3(3) and 2428.3(4) shall be used only for chimneys and vents not exposed to the outdoors below the roof line. A Type B vent or listed chimney lining system passing through an unused masonry chimney flue shall not be considered to be exposed to the outdoors. A Type B vent shall not be considered to be exposed to the outdoors where it passes through an unventilated enclosure or chase insulated to a value of not less than R-8.

2428.3.17 Connector maximum and minimum size. Vent connectors shall not be increased in size more than two sizes greater than the listed appliance categorized vent diameter, flue collar diameter, or draft hood outlet diameter. Vent connectors for draft-hood-equipped appliances shall not be smaller than the draft hood outlet diameter. Where a vent connector size(s) determined from the tables for a fan-assisted appliance(s) is smaller than the flue collar diameter, the use of the smaller size(s) shall be permitted provided that the installation complies with all of the following conditions:

1. Vent connectors for fan-assisted appliance flue collars 12 inches (305 mm) in diameter or smaller are not reduced by more than one table size [e.g., 12 inches to 10 inches (305 mm to 254 mm) is a one-size reduction] and those larger than 12 inches (305 mm) in diameter are not reduced more than two table sizes [e.g., 24 inches to 20 inches (610 mm to 508 mm) is a two-size reduction].

2. The fan-assisted appliance(s) is common vented with a draft-hood-equipped appliance(s).

3. The vent connector has a smooth interior wall.

2428.3.18 Component commingling. All combinations of pipe sizes, single-wall, and double-wall metal pipe shall be allowed within any connector run(s) or within the common vent, provided all of the appropriate tables permit all of the desired sizes and types of pipe, as if they were used for the entire length of the subject connector or vent. Where single-wall and Type B double-wall metal pipes are used for vent connectors within the same venting system, the common vent must be sized using Table 2428.3(2) or 2428.3(4), as appropriate.

2428.3.19 Draft hood conversion accessories. Draft hood conversion accessories for use with masonry chimneys venting listed Category I fan-assisted appliances shall be listed and installed in accordance with the manufacturer's installation instructions for such listed accessories.

2428.3.20 Multiple sizes permitted. Where a table permits more than one diameter of pipe to be used for a connector or vent, all the permitted sizes shall be permitted to be used.

2428.3.21 Table interpolation. Interpolation shall be permitted in calculating capacities for vent dimensions that fall between table entries.

2428.3.22 Extrapolation prohibited. Extrapolation beyond the table entries shall not be permitted.

2428.3.23 Engineering calculations. For vent heights less than 6 feet (1829 mm) and greater than shown in the tables, engineering methods shall be used to calculate vent capacities.

SECTION 2429
DIRECT-VENT, INTEGRAL VENT, MECHANICAL VENT AND VENTILATION/EXHAUST HOOD VENTING

2429.1 General. The installation of direct-vent and integral vent appliances shall be in accordance with Section 2427. Mechanical venting systems shall be designed and installed in accordance with Section 2427.

SECTION 2430
FACTORY-BUILT CHIMNEYS

2430.1 Listing. Factory-built chimneys for building heating appliances producing flue gases having a temperature not greater than 1,000°F (538°C), measured at the entrance to the chimney, shall be listed and labeled in accordance with UL 103 and shall be installed and terminated in accordance with the manufacturer's installation instructions.

2430.2 Support. Where factory-built chimneys are supported by structural members, such as joists and rafters, such members shall be designed to support the additional load.

SECTION 2431
GENERAL

2431.1 Scope. Sections 2432 through 2453 shall govern the approval, design, installation, construction, maintenance, alteration and repair of the appliances and equipment specifically identified herein.

SECTION 2432
DECORATIVE APPLIANCES FOR INSTALLATION IN FIREPLACES

2432.1 General. Decorative appliances for installation in approved solid fuel burning fireplaces shall be tested in accordance with ANSI Z21.60 and shall be installed in accordance with the manufacturer's installation instructions. Manually lighted natural gas decorative appliances shall be tested in accordance with ANSI Z21.84.

2432.2 Flame safeguard device. Decorative appliances for installation in approved solid fuel-burning fireplaces, with the exception of those tested in accordance with ANSI Z21.84, shall utilize a direct ignition device, an ignitor or a pilot flame to ignite the fuel at the main burner, and shall be equipped with a flame safeguard device. The flame safeguard device shall automatically shut off the fuel supply to a main burner or group of burners when the means of ignition of such burners becomes inoperative.

2432.3 Prohibited installations. Decorative appliances for installation in fireplaces shall not be installed where prohibited by Section 2406.2.

SECTION 2433
LOG LIGHTERS

2433.1 General. Log lighters shall be tested in accordance with CSA 8 and shall be installed in accordance with the manufacturer's installation instructions.

SECTION 2434
VENTED GAS FIREPLACES (DECORATIVE APPLIANCES)

2434.1 General. Vented gas fireplaces shall be tested in accordance with ANSI Z21.50, shall be installed in accordance with the manufacturer's installation instructions and shall be designed and equipped as specified in Section 2432.2.

2434.2 Access. Panels, grilles, and access doors that are required to be removed for normal servicing operations shall not be attached to the building.

SECTION 2435
VENTED GAS FIREPLACE HEATERS

2435.1 General. Vented gas fireplace heaters shall be installed in accordance with the manufacturer's installation instructions, shall be tested in accordance with ANSI Z21.88 and shall be designed and equipped as specified in Section 2432.2.

SECTION 2436
VENTED WALL FURNACES

2436.1 General. Vented wall furnaces shall be tested in accordance with ANSI Z21.86/CSA 2.32 and shall be installed in accordance with the manufacturer's installation instructions.

2436.2 Venting. Vented wall furnaces shall be vented in accordance with Section 2427.

2436.3 Location. Vented wall furnaces shall be located so as not to cause a fire hazard to walls, floors, combustible furnishings or doors. Vented wall furnaces installed between bathrooms and adjoining rooms shall not circulate air from bathrooms to other parts of the building.

2436.4 Door swing. Vented wall furnaces shall be located so that a door cannot swing within 12 inches (305 mm) of an air inlet or air outlet of such furnace

measured at right angles to the opening. Doorstops or door closers shall not be installed to obtain this clearance.

2436.5 Ducts prohibited. Ducts shall not be attached to wall furnaces. Casing extension boots shall not be installed unless listed as part of the appliance.

2436.6 Access. Vented wall furnaces shall be provided with access for cleaning of heating surfaces, removal of burners, replacement of sections, motors, controls, filters and other working parts, and for adjustments and lubrication of parts requiring such attention. Panels, grilles and access doors that are required to be removed for normal servicing operations shall not be attached to the building construction.

SECTION 2437
FLOOR FURNACES

2437.1 General. Floor furnaces shall be tested in accordance with ANSI Z21.86/CSA 2.32 and shall be installed in accordance with the manufacturer's installation instructions.

2437.2 Placement. The following provisions apply to floor furnaces:

1. Floors. Floor furnaces shall not be installed in the floor of any doorway, stairway landing, aisle or passageway of any enclosure, public or private, or in an exitway from any such room or space.

2. Walls and corners. The register of a floor furnace with a horizontal warm air outlet shall not be placed closer than 6 inches (152 mm) to the nearest wall. A distance of at least 18 inches (457 mm) from two adjoining sides of the floor furnace register to walls shall be provided to eliminate the necessity of occupants walking over the warm air discharge. The remaining sides shall be permitted to be placed not closer than 6 inches (152 mm) to a wall. Wall-register models shall not be placed closer than 6 inches (152 mm) to a corner.

3. Draperies. The furnace shall be placed so that a door, drapery, or similar object cannot be nearer than 12 inches (305 mm) to any portion of the register of the furnace.

4. Floor construction. Floor furnaces shall not be installed in concrete floor construction built on grade.

5. Thermostat. The controlling thermostat for a floor furnace shall be located within the same room or space as the floor furnace or shall be located in an adjacent room or space that is permanently open to the room or space containing the floor furnace.

2437.3 Bracing. The floor around the furnace shall be braced and headed with a support framework designed in accordance with Chapter 5.

2437.4 Clearance. The lowest portion of the floor furnace shall have not less than a 6-inch (152 mm) clearance from the grade level; except where the lower 6-inch (152 mm) portion of the floor furnace is sealed by the manufacturer to prevent entrance of water, the minimum clearance shall be reduced to not less than 2 inches (51 mm). Where these clearances cannot be provided, the ground below and to the sides shall be excavated to form a pit under the furnace so that the required clearance is provided beneath the lowest portion of the furnace. A 12-inch (305 mm) minimum clearance shall be provided on all sides except the control side, which shall have an 18-inch (457 mm) minimum clearance.

2437.5 First floor installation. Where the basement story level below the floor in which a floor furnace is installed is utilized as habitable space, such floor furnaces shall be enclosed as specified in Section 2437.6 and shall project into a nonhabitable space.

2437.6 Upper floor installations. Floor furnaces installed in upper stories of buildings shall project below into nonhabitable space and shall be separated from the nonhabitable space by an enclosure constructed of noncombustible materials. The floor furnace shall be provided with access, clearance to all sides and bottom of not less than 6 inches (152 mm) and combustion air in accordance with Section 2407.

SECTION 2438
CLOTHES DRYERS

2438.1 General. Clothes dryers shall be tested in accordance with ANSI Z21.5.1 and shall be installed in accordance with the manufacturer's installation instructions.

SECTION 2439
CLOTHES DRYER EXHAUST

2439.1 Installation. Clothes dryers shall be exhausted in accordance with the manufacturer's instructions. Dryer exhaust systems shall be independent of all other systems and shall convey the moisture and any products of combustion to the outside of the building.

2439.2 Duct penetrations. Ducts that exhaust clothes dryers shall not penetrate or be located within any fireblocking, draftstopping or any wall, floor/ceiling or other assembly required by this code to be fire-resistance rated, unless such duct is constructed of galvanized steel or aluminum of the thickness specified in the mechanical provisions of this code and the fire-resistance rating is maintained in accordance with this code. Fire dampers shall not be installed in clothes dryer exhaust duct systems.

2439.3 Exhaust installation. Dryer exhaust ducts for clothes dryers shall terminate on the outside of the building and shall be equipped with a backdraft damper. Screens shall not be installed at the duct termination. Ducts shall not be connected or installed with sheet metal screws or other fasteners that will obstruct the flow. Clothes dryer exhaust ducts shall not be connected to a vent connector, vent or chimney. Clothes dryer exhaust ducts shall not extend into or through ducts or plenums.

2439.4 Makeup air. Installations exhausting more than 200 cfm (0.09 m^3/s) shall be provided with makeup air. Where a closet is designed for the installation of a clothes dryer, an opening having an area of not less than 100 square inches (0.0645 m^2) for makeup air shall be provided in the closet enclosure, or makeup air shall be provided by other approved means.

2439.5 Domestic clothes dryer exhaust ducts. Exhaust ducts for domestic clothes dryers shall conform to the requirements of Sections *2439.5.1* through *2439.5.7*.

2439.5.1 Material and size. Exhaust ducts shall have a smooth interior finish and shall be constructed of metal a minimum 0.016-inch (0.4 mm) thick. The exhaust duct size shall be 4 inches (102 mm) nominal in diameter.

2439.5.2 Duct installation. Exhaust ducts shall be supported at 4 foot (1219 mm) intervals and secured in place. The insert end of the duct shall extend into the adjoining duct or fitting in the direction of airflow. Ducts shall not be joined with screws or similar fasteners that protrude into the inside of the duct.

2439.5.3 Protection required. Protective shield plates shall be placed where nails or screws from finish or other work are likely to penetrate the clothes dryer exhaust duct. Shield plates shall be placed on the finished face of all framing members where there is less than $1^1/_4$ inches (32 mm) between the duct and the finished face of the framing member. Protective shield plates shall be constructed of steel, shall have a minimum thickness of 0.062 inch (1.6 mm)

2439.5.4 Transition ducts. Transition ducts used to connect the dryer to the exhaust duct system shall be a single length that is listed and labeled in accordance with UL 2158A. Transition ducts shall be a maximum of 8 feet (2438 mm) in length and shall not be concealed within construction.

2439.5.5 Duct length. The maximum allowable exhaust duct length shall be determined by one of the methods specified in Section 2439.5.5.1 or 2439.5.5.2.

2439.5.5.1 Specified length. The maximum length of the exhaust duct shall be *25 feet (7620 mm)* from the connection to the transition duct from the dryer to the outlet terminal. Where fittings are used, the maximum length of the exhaust duct shall be reduced in accordance with Table 2439.5.5.1.

2439.5.5.2 Manufacturer's instructions. The maximum length of the exhaust duct shall be determined by the dryer manufacturer's installation instructions. The *building* official shall be provided with a copy of the installation instructions for the make and model of the dryer. Where the exhaust duct is to be concealed, the installation instructions shall be provided to the *building* official prior to the concealment inspection. In the absence of fitting equivalent length calculations from the clothes dryer manufacturer, Table 2439.5.5.1 shall be used.

2439.5.6 Length identification. Where the exhaust duct is concealed within the building construction, *and only if the equivalent length exceeds 25 feet (7620 mm),* the equivalent length of the exhaust duct shall be identified on a permanent label or tag. The label or tag shall be located within 6 feet (1829 mm) of the exhaust duct connection *or at the electrical panel*.

2439.5.7 Exhaust duct required. Where space for a clothes dryer is provided, an exhaust duct system shall be installed. Where the clothes dryer is

not installed at the time of occupancy, the exhaust duct shall be capped at location of the future dryer.

Exception: Where a listed condensing clothes dryer is installed prior to occupancy of the structure.

SECTION 2440
SAUNA HEATERS

2440.1 General. Sauna heaters shall be installed in accordance with the manufacturer's installation instructions.

2440.2 Location and protection. Sauna heaters shall be located so as to minimize the possibility of accidental contact by a person in the room.

2440.2.1 Guards. Sauna heaters shall be protected from accidental contact by an approved guard or barrier of material having a low coefficient of thermal conductivity. The guard shall not substantially affect the transfer of heat from the heater to the room.

2440.3 Access. Panels, grilles and access doors that are required to be removed for normal servicing operations, shall not be attached to the building.

2440.4 Combustion and dilution air intakes. Sauna heaters of other than the direct-vent type shall be installed with the draft hood and combustion air intake located outside the sauna room. Where the combustion air inlet and the draft hood are in a dressing room adjacent to the sauna room, there shall be provisions to prevent physically blocking the combustion air inlet and the draft hood inlet, and to prevent physical contact with the draft hood and vent assembly, or warning notices shall be posted to avoid such contact. Any warning notice shall be easily readable, shall contrast with its background, and the wording shall be in letters not less than 0.25 inch (6.4 mm) high.

TABLE 2439.5.5.1
DRYER EXHAUST DUCT FITTING EQUIVALENT LENGTH

DRYER EXHAUST DUCT FITTING TYPE	EQUIVALENT LENGTH
4 inch radius mitered 45 degree elbow	2 feet 6 inches
4 inch radius mitered 90 degree elbow	5 feet
6 inch radius smooth 45 degree elbow	1 foot
6 inch radius smooth 90 degree elbow	1 foot 9 inches
8 inch radius smooth 45 degree elbow	1 foot

8 inch radius smooth 90 degree elbow	1 foot 7 inches
10 inch radius smooth 45 degree elbow	9 inches
10 inch radius smooth 90 degree elbow	1 foot 6 inches

For SI: 1 inch = 25.4 mm, 1 foot = 304.8 mm, 1 degree = 0.0175 rad.

2440.5 Combustion and ventilation air. Combustion air shall not be taken from inside the sauna room. Combustion and ventilation air for a sauna heater not of the direct-vent type shall be provided to the area in which the combustion air inlet and draft hood are located in accordance with Section 2407.

2440.6 Heat and time controls. Sauna heaters shall be equipped with a thermostat which will limit room temperature to 194°F (90°C). If the thermostat is not an integral part of the sauna heater, the heat-sensing element shall be located within 6 inches (152 mm) of the ceiling. If the heat-sensing element is a capillary tube and bulb, the assembly shall be attached to the wall or other support, and shall be protected against physical damage.

2440.6.1 Timers. A timer, if provided to control main burner operation, shall have a maximum operating time of 1 hour. The control for the timer shall be located outside the sauna room.

2440.7 Sauna room. A ventilation opening into the sauna room shall be provided. The opening shall be not less than 4 inches by 8 inches (102 mm by 203 mm) located near the top of the door into the sauna room.

SECTION 2441
POOL AND SPA HEATERS

2441.1 General. *Where regulations are adopted and enforced by the local jurisdiction,* heaters *for residential swimming pools and spas* shall be tested in accordance with ANSI Z21.56 and shall be installed in accordance with the manufacturer's installation instructions.

SECTION 2442
FORCED-AIR WARM-AIR FURNACES

2442.1 General. Forced-air warm-air furnaces shall be tested in accordance with ANSI Z21.47 or UL 795 and shall be installed in accordance with the manufacturer's installation instructions.

2442.2 Forced-air furnaces. The minimum unobstructed total area of the outside and return air ducts or openings to a forced-air warm-air furnace shall be not less than 2 square inches for each 1,000 Btu/h (4402 mm^2/W) output rating capacity of the furnace and not less than that specified in the furnace manufacturer's installation instructions. The minimum unobstructed total area of supply ducts from a forced-air warm-air furnace shall be not less than 2 square inches for each 1,000 Btu/h (4402 mm^2/W) output rating capacity of the furnace and not less than that specified in the furnace manufacturer's installation instructions.

> **Exception:** The total area of the supply air ducts and outside and return air ducts shall not be required to be larger than the minimum size required by the furnace manufacturer's installation instructions.

2442.3 Dampers. Volume dampers shall not be placed in the air inlet to a furnace in a manner that will reduce the required air to the furnace.

2442.4 Circulating air ducts for forced-air warm-air furnaces. Circulating air for forced-air-type, warm-air furnaces shall be conducted into the blower housing from outside the furnace enclosure by continuous air-tight ducts.

2442.5 Prohibited sources. Outside or return air for a forced-air heating system shall not be taken from the following locations:

1. Closer than 10 feet (3048 mm) from an appliance vent outlet, a vent opening from a plumbing drainage system or the discharge outlet of an exhaust fan, unless the outlet is 3 feet (914 mm) above the outside air inlet.

2. Where objectionable odors, fumes or flammable vapors are present; or where located less than 10 feet (3048 mm) above the surface of any abutting public way or driveway; or where located at grade level by a sidewalk, street, alley or driveway.

3. A hazardous or insanitary location or a refrigeration machinery room as defined in the *Ohio* Mechanical Code.

4. A room or space, the volume of which is less than 25 percent of the entire volume served by such system. Where connected by a permanent opening having an area sized in accordance with Section 2442.2, adjoining rooms or spaces shall be considered as a single room or space for the purpose of determining the volume of such rooms or spaces.

Exception: The minimum volume requirement shall not apply where the amount of return air taken from a room or space is less than or equal to the amount of supply air delivered to that room or space.

5. A room or space containing an appliance where such a room or space serves as the sole source of return air.

   Exception: This shall not apply where:

   1. The appliance is a direct-vent appliance or an appliance not requiring a vent in accordance with Section 2425.8.

   2. The room or space complies with the following requirements:

      2.1. The return air shall be taken from a room or space having a volume exceeding 1 cubic foot for each 10 Btu/h (9.6 L/W) of combined input rating of all fuel-burning appliances therein.

      2.2. The volume of supply air discharged back into the same space shall be approximately equal to the volume of return air taken from the space.

      2.3. Return-air inlets shall not be located within 10 feet (3048 mm) of any appliance firebox or draft hood in the same room or space.

   3. Rooms or spaces containing solid-fuel-burning appliances, provided that return-air inlets are located not less than 10 feet (3048 mm) from the firebox of such appliances.

6. A closet, bathroom, toilet room, kitchen, garage, mechanical room, boiler room, furnace room or attic.

   Exception: Where return air intakes are located not less than 10 feet (3048 mm) from cooking appliances, and serve only the kitchen area, taking return air from a kitchen area shall not be prohibited.

7. A crawl space by means of direct connection to the return side of a forced air system. Transfer openings in the crawl space enclosure shall not be prohibited.

2442.6 Screen. Required outdoor air inlets shall be covered with a screen having ¼-inch (6.4 mm) openings. Required outdoor air inlets serving a nonresidential portion of a building shall be covered with screen having openings larger than ¼ inch (6.4 mm) and not larger than 1 inch (25 mm).

2442.7 Return-air limitation. Return air from one dwelling unit shall not be discharged into another dwelling unit.

2442.8 Furnace plenums and air ducts. Where a furnace is installed so that supply ducts carry air circulated by the furnace to areas outside of the space containing the furnace, the return air shall also be handled by a duct(s) sealed to the furnace casing and terminating outside of the space containing the furnace.

SECTION 2443
CONVERSION BURNERS

2443.1 Conversion burners. The installation of conversion burners shall conform to ANSI Z21.8.

SECTION 2444
UNIT HEATERS

2444.1 General. Unit heaters shall be tested in accordance with ANSI Z83.8 and shall be installed in accordance with the manufacturer's installation instructions.

2444.2 Support. Suspended-type unit heaters shall be supported by elements that are designed and constructed to accommodate the weight and dynamic loads. Hangers and brackets shall be of noncombustible material.

2444.3 Ductwork. Ducts shall not be connected to a unit heater unless the heater is listed for such installation.

2444.4 Clearance. Suspended-type unit heaters shall be installed with clearances to combustible materials of not less than 18 inches (457 mm) at the sides, 12 inches (305 mm) at the bottom and 6 inches (152 mm) above the top where the unit heater has an internal draft hood or 1 inch (25 mm) above the top of the sloping side of the vertical draft hood.

Floor-mounted-type unit heaters shall be installed with clearances to combustible materials at the back and one side only of not less than 6 inches (152 mm). Where the flue gases are vented horizontally, the 6-inch (152 mm) clearance shall be measured from the draft hood or vent instead of the rear wall of the unit heater. Floor-mounted-type unit heaters shall not be installed on combustible floors unless listed for such installation.

Clearance for servicing all unit heaters shall be in accordance with the manufacturer's installation instructions.

> **Exception:** Unit heaters listed for reduced clearance shall be permitted to be installed with such clearances in accordance with their listing and the manufacturer's instructions.

SECTION 2445
UNVENTED ROOM HEATERS

2445.1 General. Unvented room heaters shall be tested in accordance with ANSI Z 21.11.2 and shall be installed in accordance with the conditions of the listing and the manufacturer's installation instructions.

2445.2 Prohibited use. One or more unvented room heaters shall not be used as the sole source of comfort heating in a dwelling unit.

2445.3 Input rating. Unvented room heaters shall not have an input rating in excess of 40,000 Btu/h (11.7 kW).

2445.4 Prohibited locations. The location of unvented room heaters shall comply with Section 2406.2.

2445.5 Room or space volume. The aggregate input rating of all unvented appliances installed in a room or space shall not exceed 20 Btu/h per cubic foot (0.21 kW/m^3) of volume of such room or space. Where the room or space in which the appliance is installed is directly connected to another room or space by a doorway, archway or other opening of comparable size that cannot be closed, the volume of such adjacent room or space shall be permitted to be included in the calculations.

2445.6 Oxygen-depletion safety system. Unvented room heaters shall be equipped with an oxygen-depletion-sensitive safety shutoff system. The system

shall shut off the gas supply to the main and pilot burners when the oxygen in the surrounding atmosphere is depleted to the percent concentration specified by the manufacturer, but not lower than 18 percent. The system shall not incorporate field adjustment means capable of changing the set point at which the system acts to shut off the gas supply to the room heater.

2445.7 Unvented decorative room heaters. An unvented decorative room heater shall not be installed in a factory-built fireplace unless the fireplace system has been specifically tested, listed and labeled for such use in accordance with UL 127.

2445.7.1 Ventless firebox enclosures. Ventless firebox enclosures used with unvented decorative room heaters shall be listed as complying with ANSI Z21.91.

SECTION 2446
VENTED ROOM HEATERS

2446.1 General. Vented room heaters shall be tested in accordance with ANSI Z21.86/CSA 2.32, shall be designed and equipped as specified in Section 2432.2 and shall be installed in accordance with the manufacturer's installation instructions.

SECTION 2447
COOKING APPLIANCES

2447.1 Cooking appliances. Cooking appliances that are designed for permanent installation, including ranges, ovens, stoves, broilers, grills, fryers, griddles, hot plates and barbecues, shall be tested in accordance with ANSI Z21.1 or ANSI Z21.58 and shall be installed in accordance with the manufacturer's installation instructions.

G2447.2 Prohibited location. Cooking *appliances* designed, tested, listed and labeled for use in commercial occupancies shall not be installed within *dwelling units* or within any area where domestic cooking operations occur.

G2447.3 Domestic appliances. Cooking appliances installed within dwelling units and within areas where domestic cooking operations occur shall be listed and labeled as household-type appliances for domestic use.

2447.4 Range installation. Ranges installed on combustible floors shall be set on their own bases or legs and shall be installed with clearances of not less than that shown on the label.

2447.5 Vertical clearance above cooking top. Household cooking appliances shall have a vertical clearance above the cooking top of not less than 30 inches (760 mm) to combustible material and metal cabinets. A minimum clearance of 24 inches (610 mm) is permitted where one of the following is installed:

1. The underside of the combustible material or metal cabinet above the cooking top is protected with not less than ¼ inch (6 mm) thick insulating millboard covered with sheet metal not less than 0.0122 inch (0.3 mm) thick.

2. A metal ventilating hood constructed of sheet metal not less than 0.0122 inch (0.3 mm) thick is installed above the cooking top with a clearance of not less than ¼ inch (6 mm) between the hood and the underside of the combustible material or metal cabinet. The hood shall have a width not less than the width of the appliance and shall be centered over the appliance.

3. A listed cooking appliance or microwave oven is installed over a listed cooking appliance and in compliance with the terms of the manufacturer's installation instructions for the upper appliance.

SECTION 2448
WATER HEATERS

2448.1 General. Water heaters shall be tested in accordance with ANSI Z 21.10.1 and ANSI Z 21.10.3 and shall be installed in accordance with the manufacturer's installation instructions.

2448.1.1 Installation requirements. The requirements for water heaters relative to sizing, relief valves, drain pans and scald protection shall be in accordance with this code.

2448.2 Water heaters utilized for space heating. Water heaters utilized both to supply potable hot water and provide hot water for space-heating applications shall be listed and labeled for such applications by the manufacturer and shall be

installed in accordance with the manufacturer's installation instructions and this code.

SECTION 2449
AIR CONDITIONING APPLIANCES

2449.1 General. Air conditioning appliances shall be tested in accordance with ANSI Z21.40.1 or ANSI Z21.40.2 and shall be installed in accordance with the manufacturer's installation instructions.

2449.2 Independent piping. Gas piping serving heating appliances shall be permitted to also serve cooling appliances where such heating and cooling appliances cannot be operated simultaneously. (See Section 2413.)

2449.3 Connection of gas engine-powered air conditioners. To protect against the effects of normal vibration in service, gas engines shall not be rigidly connected to the gas supply piping.

2449.4 Installation. Air conditioning appliances shall be installed in accordance with the manufacturer's instructions. Unless the appliance is listed for installation on a combustible surface such as a floor or roof, or unless the surface is protected in an approved manner, the appliance shall be installed on a surface of noncombustible construction with noncombustible material and surface finish and with no combustible material against the underside thereof.

SECTION 2450
ILLUMINATING APPLIANCES

2450.1 General. Illuminating appliances shall be tested in accordance with ANSI Z21.42 and shall be installed in accordance with the manufacturer's installation instructions.

2450.2 Mounting on buildings. Illuminating appliances designed for wall or ceiling mounting shall be securely attached to substantial structures in such a manner that they are not dependent on the gas piping for support.

2450.3 Mounting on posts. Illuminating appliances designed for post mounting shall be securely and rigidly attached to a post. Posts shall be rigidly mounted. The strength and rigidity of posts greater than 3 feet (914 mm) in height shall be at least equivalent to that of a 2.5-inch-diameter (64 mm) post constructed of 0.064-inch-thick (1.6 mm) steel or a 1-inch (25 mm) Schedule 40 steel pipe. Posts

3 feet (914 mm) or less in height shall not be smaller than ¾-inch (19.1 mm) Schedule 40 steel pipe. Drain openings shall be provided near the base of posts where there is a possibility of water collecting inside them.

2450.4 Appliance pressure regulators. Where an appliance pressure regulator is not supplied with an illuminating appliance and the service line is not equipped with a service pressure regulator, an appliance pressure regulator shall be installed in the line to the illuminating appliance. For multiple installations, one regulator of adequate capacity shall be permitted to serve more than one illuminating appliance.

SECTION 2451
INFRARED RADIANT HEATERS

2451.1 General. Infrared radiant heaters shall be tested in accordance with ANSI Z 83.6 and shall be installed in accordance with the manufacturer's installation instructions.

2451.2 Support. Infrared radiant heaters shall be fixed in a position independent of gas and electric supply lines. Hangers and brackets shall be of noncombustible material.

SECTION 2452
BOILERS

2452.1 Standards. Boilers shall be listed in accordance with the requirements of ANSI Z21.13 or UL 795. If applicable, the boiler shall be designed and constructed in accordance with the requirements of ASME CSD-1 and as applicable, the ASME Boiler and Pressure Vessel Code, Sections I, II, IV, V and IX and NFPA 85.

2452.2 Installation. In addition to the requirements of this code, the installation of boilers shall be in accordance with the manufacturer's instructions and this code. Operating instructions of a permanent type shall be attached to the boiler. Boilers shall have all controls set, adjusted and tested by the installer. A complete control diagram together with complete boiler operating instructions shall be furnished by the installer. The manufacturer's rating data and the nameplate shall be attached to the boiler.

2452.3 Clearance to combustible material. Clearances to combustible materials shall be in accordance with Section 2409.4.

SECTION 2453
CHIMNEY DAMPER OPENING AREA

2453.1 Free opening area of chimney dampers. Where an unlisted decorative appliance for installation in a vented fireplace is installed, the fireplace damper shall have a permanent free opening equal to or greater than specified in Table 2453.1.

TABLE 2453.1
FREE OPENING AREA OF CHIMNEY DAMPER FOR VENTING FLUE GASES FROM UNLISTED DECORATIVE APPLIANCES FOR INSTALLATION IN VENTED FIREPLACES

CHIMNEY HEIGHT (feet)	MINIMUM PERMANENT FREE OPENING (square inches)[a]						
	8	13	20	29	39	51	64
	Appliance input rating (Btu per hour)						
6	7,800	14,000	23,200	34,000	46,400	62,400	80,000
8	8,400	15,200	25,200	37,000	50,400	68,000	86,000
10	9,000	16,800	27,600	40,400	55,800	74,400	96,400
15	9,800	18,200	30,200	44,600	62,400	84,000	108,800
20	10,600	20,200	32,600	50,400	68,400	94,000	122,200
30	11,200	21,600	36,600	55,200	76,800	105,800	138,600

For SI: 1 inch = 25.4 mm, 1 foot = 304.8 mm, 1 square inch = 645.16 mm^2, 1,000 Btu per hour = 0.293 kW.

a. The first six minimum permanent free openings (8 square inches to 51 square inches) correspond approximately to the cross-sectional areas of chimneys having diameters of 3 inches through 8 inches, respectively. The 64-square inch opening corresponds to the cross-sectional area of standard 8-inch by 8-inch chimney tile.

4101:8-34-01 Electrical.

[Comment: When a reference is made within this rule to a federal statutory provision, an industry consensus standard, or any other technical publication, the specific date and title of the publication as well as the name and address of the promulgating agency are listed in rule 4101:8-44-01 of the Administrative Code. The application of the referenced standards shall be limited and as prescribed in section 102.5 of rule 4101:8-1-01 of the Administrative Code.]

SECTION 3401
ELECTRICAL

3401.1 Electrical. *The provisions of the National Electrical Code, NFPA 70, shall be incorporated herein and shall govern the installation, testing and operation of the electrical systems of one-, two- and three-family dwellings and their accessory structures except for the following:*

1. ***Section 210.8(A)(2) shall be modified to read****:*
   Garages, and also accessory buildings that have a floor located at or below grade level not intended as habitable rooms and limited to storage areas, work areas, and areas of similar use *except for the receptacle located to serve a garage door opener when the device is a single receptacle and located in the ceiling*.

2. ***Section 210.8(A)(5) shall be modified to read****:*
   Unfinished basements – for the purposes of this section, unfinished basements are defined as portions or areas of the basement not intended as habitable rooms and limited to storage areas, work areas, and the like.

   Exceptions:

   1. A receptacle supplying only a permanently installed fire alarm or burglar alarm system shall not be required to have ground-fault circuit-interrupter protection.

   2. *A single receptacle located to serve a sump pump shall not be required to have ground-fault circuit-interrupter protection when there is a duplex receptacle with ground-fault circuit-interrupter protection within six (6) feet of the sump pump.*

SECTION 3402
EMERGENCY AND STANDBY POWER SYSTEMS

3402.1 Installation. *Emergency and standby power systems shall be installed in accordance with this code and NFPA 70. The performance, classification, transfer, testing, and maintenance of emergency and standby power systems shall also comply with either NFPA 110 (liquid- and gas- fueled systems) or NFPA 111 (battery and inertia systems), as applicable.*

3402.1.1 Stationary generators. *Stationary emergency and standby power generator assemblies shall be listed in accordance with UL 2200.*

3402.1.1.1 Engine-driven generators. *The installation of liquid- and gas-fueled stationary internal combustion engines and gas turbines used to drive generator assemblies shall meet the requirements of NFPA 37.*

3402.1.1.1.1 Fuel tanks connected to generator assemblies. *Fuel tanks piped to and supplying fuel for engine-driven generator assemblies may be engine-mounted, located inside of a building, outside of a building, or on a roof in accordance with NFPA 37 or NFPA 30.*

3402.1.1.1.1.1 Engine-mounted tanks. *Engine-mounted tanks located outdoors may be located in accordance with Section 4.1.4 of NFPA 37 and shall be vented in accordance with NFPA 30. Engine-mounted tanks shall be provided with adequate clearance to enable filling, maintenance, and testing, shall be safeguarded against public access, and shall be protected from impact.*

3402.1.1.1.1.2 Other fuel tanks. *Fuel tanks, other than engine-mounted tanks, piped to and supplying the generator engine shall be located, installed, and vented in accordance with the applicable sections of NFPA 37 or located, installed, and vented in accordance with NFPA 30.*

3402.1.1.1.2 Gaseous fuel supply. *Where an internal combustion engine supplied with gaseous fuel powers*

emergency or standby generators, the fuel gas storage and piping system shall comply with NFPA 37 and Chapter 24.

4101:8-44-01 Referenced standards.

SECTION 4401
REFERENCED STANDARDS

4401.1 General. *This chapter lists the standards that are referenced in various sections of this code. The standards are listed herein by the promulgating agency of the standard, the standard identification, the effective date and title. The application of the referenced standards shall be as specified in Section 102.5.*

4401.2 Referenced codes. *When indicated in this code, the following codes refer to provisions in the listed chapters of the administrative code:*

Referenced Code	***Ohio Administrative Code Chapters***
Ohio Building Code *Fire Code* *Mechanical Code* *Plumbing Code*	*4101:1-1 to 4101:1-35* *1301:7-1 to 1301:7-7* *4101:2-1 to 4101:2-15* *4101:3-1 to 4101:3-13, codified and published as the 2011 Ohio Plumbing Code, effective 11-1-2011 (including update effective ~~03-01-2013~~07-01-2014), and as modified in Section 2501.1.1.*

4401.3 Referenced standard list.

American Architectural Manufacturers Association
1827 Walden Office Square, Suite 550
Schaumburg, IL 60173

AAMA Standard reference number	**Title**

AAMA/WDMA/CSA 101/I.S.2/A440—08	North American Fenestration Standard/Specification for Windows, Doors, and Skylights
450—*10*	Voluntary Performance Rating Method for Mulled Fenestration Assemblies
506—*08*	Voluntary Specifications for Hurricane Impact and Cycle Testing of Fenestration Products
711—07	Voluntary Specification for Self Adhering Flashing Used for Installation of Exterior Wall Fenestration Products.

Air Conditioning Contractors of America
2800 Shirlington Road, Suite 300
Arlington, VA 22206

ACCA Standard reference number	**Title**
Manual D—*09*	Residential Duct Systems
Manual J— *04*	Residential Load Calculation—Eighth Edition
Manual S—04	Residential Equipment Selection

American Concrete Institute
38800 Country Club Drive
Farmington Hills, MI 48331

ACE Standard reference number	**Title**
318—08	Building Code Requirements for Structural Concrete
332—08	Code Requirements for Residential Concrete Construction
530—08	Building Code Requirements for Masonry Structures
530.1—08	Specification for Masonry Structures

American Forest and Paper Association
1111 19th Street, NW, Suite 800
Washington, DC 20036

American Forest Products Association (Currently the American Wood Council)
803 Sycolin Road, Suite 201
Leesburg, VA 20175
http://www.awc.org/index.html

AFPA Standard reference number	**Title**
NDS—05	National Design Specification (NDS) for Wood Construction—with 2005 Supplement
WFCM-01	Wood Frame Construction Manual for One- and Two-family Dwellings
AFPA—93	Span Tables for Joists and Rafters
PWF—07	Permanent Wood Foundation Design Specification

American Iron and Steel Institute
1140 Connecticut Ave, Suite 705
Washington, DC 20036

AISI Standard reference number	**Title**
AISI S100—07	North American Specification for the Design of Cold-formed Steel Structural Members
AISI S230—07	Standard for Cold-formed Steel Framing-prescriptive Method for One- and Two-family Dwellings

American Institute of Timber Construction
7012 S. Revere Parkway, Suite 140
Centennial, CO 80112

AITC Standard reference number	**Title**
ANSI/AITC A 190.1—07	Structural Glued Laminated Timber

American National Standards Institute
25 West 43rd Street, Fourth Floor
New York, NY 10036

ANSI Standard reference number	**Title**
A108.1A—*09*	Installation of Ceramic Tile in the Wet-set Method, with Portland Cement Mortar
A108.1B—*09*	Installation of Ceramic Tile, Quarry Tile on a Cured Portland Cement Mortar Setting Bed with Dry-set or Latex-Portland Mortar
A108.4—*09*	Installation of Ceramic Tile with Organic Adhesives or Water Cleanable Tile-setting Epoxy Adhesive
A108.5—*09*	Installation of Ceramic Tile with Dry-set Portland Cement Mortar or Latex-Portland Cement Mortar
A108.6—*09*	Installation of Ceramic Tile with Chemical-resistant, Water-cleanable Tile-setting and -grouting Epoxy
A108.11—*09*	Interior Installation of Cementitious Backer Units
A118.1—*10.1*	American National Standard Specifications for Dry-set Portland Cement Mortar
A118.3—*10.1*	American National Standard Specifications for Chemical-resistant, Water-cleanable Tile-setting and Grouting Epoxy and Water-cleanable Tile-setting Epoxy Adhesive
A118.10—*10.1*	Specification for Load Bearing, Bonded, Waterproof Membranes for Thin-set Ceramic Tile and Dimension Stone Installation
A136.1—*10.1*	American National Standard Specifications for Organic Adhesives for Installation of Ceramic Tile
A137.1—*08*	American National Standard Specifications for Ceramic Tile
A208.1—*09*	Particleboard
LC1—*05*	Interior Fuel Gas Piping Systems Using Corrugated Stainless Steel Tubing
LC4—07	Press-connect Copper and Copper Alloy Fittings for use in Fuel Gas Distribution Systems
Z21.1—*05*	Household Cooking Gas Appliances

Z21.5.1—*06*	Gas Clothes Dryers—Volume I—Type I Clothes Dryers
Z21.8—94 (R2002)	Installation of Domestic Gas Conversion Burners
Z21.10.1—*09*	Gas Water Heaters—Volume I—Storage Water Heaters with Input Ratings of 75,000 Btu per hour or Less
Z21.10.3—*07*	Gas Water Heaters—Volume III—Storage Water Heaters with Input Ratings above 75,000 Btu per hour, Circulating and Instantaneous Water Heaters
Z21.11.2—*07*	Gas-fired Room Heaters—Volume II—Unvented Room Heaters
Z21.13—*10*	Gas-fired Low-Pressure Steam and Hot Water Boilers
Z21.15- *09*	Manually Operated Gas Valves for Appliances, Appliance Connector Valves and Hose End Valves
Z21.24- *06*	Connectors for Gas Appliances
Z21.40.1—96 (R2002)	Gas-fired, Heat-activated Air Conditioning and Heat Pump Appliances— with Z21.40.1a-97 (R2002)
Z21.40.2—96 (R2002)	Gas-fired, Work-activated Air Conditioning and Heat Pump Appliances (Internal Combustion) — with Z21.40.2a-1997 (R2002)
Z21.42—*04*	Gas-fired Illuminating Appliances
Z21.47—*06*	Gas-fired Central Furnaces
Z21.50—*07*	Vented Gas Fireplaces
Z21.56—*06*	Gas-fired Pool Heaters
Z21.58—*08*	Outdoor Cooking Gas Appliances
Z21.60—03	Decorative Gas Appliances for Installation in Solid Fuel Burning Fireplaces—with Addenda Z21.60a-2003
Z21.75/CSA6.27—*07*	Connectors for Outdoor Gas Appliances
Z21.80—*03*	Line Pressure Regulators
Z21.83—98	Fuel Cell Power Plants.
Z21.84—02	Manually Listed, Natural Gas Decorative Gas Appliances for Installation in Solid Fuel-burning Fireplaces—with Addenda Z21.84a -2003
Z21.86—*08*	Gas-fired Vented Space Heating Appliances
Z21.88—*09*	Vented Gas Fireplace Heaters
Z21.91—*07*	Ventless Firebox Enclosures for Gas-fired Unvented Decorative Room Heaters
Z83.6—90 (R1998)	Gas-fired Infrared Heaters

Z83.8—*09*	Gas-fired Unit Heaters and Gas-fired Duct Furnaces
Z97.1—*09*	Safety Glazing Materials Used in Buildings—Safety Performance Specifications and Methods of Test

APA–The Engineered Wood Association
7011 South 19th
Tacoma, WA 98466

APA Standard reference number	**Title**
APA E30—*07*	Engineered Wood Construction Guide

American Society of Civil Engineers Structural Engineering Institute
1801 Alexander Bell Drive
Reston, VA 20191

ASCE/SEI Standard reference number	**Title**
5—08	Building Code Requirements for Masonry Structures
6—08	Specification for Masonry Structures
7—05	Minimum Design Loads for Buildings and Other Structures
24—05	Flood-resistant Design and Construction.
32—01	Design and Construction of Frost-protected Shallow Foundations

American Society of Heating, Refrigerating and Air-Conditioning Engineers, Inc.
1791 Tullie Circle, NE
Atlanta, GA 30329

ASHRAE Standard reference number	**Title**
34—*10*	Designation and Safety Classification of Refrigerants
ASHRAE—*09*	ASHRAE Fundamentals Handbook—*2009*

American Society of Mechanical Engineers
Three Park Avenue
New York, NY 10016-5990

ASME Standard reference number	**Title**
A17.1/CSA B44—*2010*	Safety Code for Elevators and Escalators
A18.1—*2008*	Safety Standard for Platforms and Stairway Chair Lifts
B1.20.1—1983 (R2006)	Pipe Threads, General Purpose (Inch)
B16.33—2002 (R*2007*)	Manually Operated Metallic Gas Valves for Use in Gas Piping Systems up to 125 psig (Sizes ½ through 2)
B16.44—02	Manually Operated Metallic Gas Valves For Use in Above-ground Piping Systems up to 5 psi.
B36.10M—2004	Welded and Seamless Wrought-steel Pipe
BPVC—*2010*	ASME Boiler and Pressure Vessel Code
CSD-1—*09*	Controls and Safety Devices for Automatically Fired Boilers

American Society of Sanitary Engineering
901 Canterbury, Suite A
Westlake, OH 44145

ASTM International
100 Barr Harbor Drive
West Conshohocken, PA 19428

ASTM Standard reference number	**Title**
A 36/A 36M—*08*	Specification for Carbon Structural Steel
A 53/A 53M—*10a*	Specification for Pipe, Steel, Black and Hot-dipped, Zinc-coated Welded and Seamless

A 82/A 82M—*07*	Specification for Steel Wire, Plain, for Concrete Reinforcement
A 106/A 106M—*10*	Specification for Seamless Carbon Steel Pipe for High Temperature Service
A 153/A 153M—*09*	Specification for Zinc Coating (Hot Dip) on Iron and Steel Hardware
A 167—*09*	Specification for Stainless and Heat-resisting Chromium-nickel Steel Plate, Sheet and Strip
A 240/A 240M—*10a*	Standard Specification for Chromium and Chromium-nickel Stainless Steel Plate, Sheet and Strip for Pressure Vessels and for General Applications
A 254—97*07*	Specification for Copper Brazed Steel Tubing
A 307—*07b*	Specification for Carbon Steel Bolts and Studs, 6000 psi Tensile Strength
A 463/A 463M—*09a*	Standard Specification for Steel Sheet, Aluminum-coated by the Hot-dip Process.
A 510—*08*	Specification for General Requirements for Wire Rods and Coarse Round Wire, Carbon Steel
A 539—99	Specification for Electric-resistance-welded Coiled Steel Tubing for Gas and Fuel Oil Lines
A 615/A 615M—*09b*	Specification for Deformed and Plain Billet-steel Bars for Concrete Reinforcement
A 641/A 641M—*09b*	Specification for Zinc-coated (Galvanized) Carbon Steel Wire
A 653/A 653M—*09a*	Specification for Steel Sheet, Zinc-coated (Galvanized) or Zinc-iron Alloy-coated (Galvanized) by the Hot-dip Process
A 706/A 706/M—*09b*	Specification for Low-alloy Steel Deformed and Plain Bars for Concrete Reinforcement
A 755/A 755M—*03 (2008)*	Specification for Steel Sheet, Metallic Coated by the Hot-dip Process and Prepainted by the Coil-coating Process for Exterior Exposed Building Products
A 778—01 *(2009)e1*	Specification for Welded Unannealed Austenitic Stainless Steel Tubular Products
A 792/A 792M—*09a*	Specification for Steel Sheet, 55% Aluminum-zinc Alloy-coated by the Hot-dip Process
A 875/A 875M—*09a*	Specification for Steel Sheet, Zinc-5%, Aluminum Alloy-coated by the Hot-dip Process

A 924/A 924M—*10*	Standard Specification for General Requirements for Steel Sheet, Metallic-coated by the Hot-Dip Process
A 951—06	Specification for Steel Wire Masonry Joint Reinforcement
A 996/A 996M—*09b*	Specifications for Rail-steel and Axel-steel Deformed Bars for Concrete Reinforcement
A 1003/A 1003M—*10*	Standard Specification for Steel Sheet, Carbon, Metallic and Nonmetallic-coated for Cold-formed Framing Members
B 42—*10*	Specification for Seamless Copper Pipe, Standard Sizes
B 43—*09*	Specification for Seamless Red Brass Pipe, Standard Sizes
B 75—02	Specification for Seamless Copper Tube
B 88—*09*	Specification for Seamless Copper Water Tube
B 101—*07*	Specification for Lead-coated Copper Sheet and Strip for Building Construction.
B 135—*10*	Specification for Seamless Brass Tube
B 209—*07*	Specification for Aluminum and Aluminum-alloy Sheet and Plate
B 227—*10*	Specification for Hard-drawn Copper-clad Steel Wire
B 251—*10*	Specification for General Requirements for Wrought Seamless Copper and Copper-alloy Tube
B 302—*07*	Specification for Threadless Copper Pipe, Standard Sizes
B 306—*09*	Specification for Copper Drainage Tube (DWV)
B 370—*09*	Specification for Copper Sheet and Strip for Building Construction
B 447—07	Specification for Welded Copper Tube
B 695—04 *(2009)*	Standard Specification for Coatings of Zinc Mechanically Deposited on Iron and Steel
B 813—*10*	Specification for Liquid and Paste Fluxes for Soldering Applications of Copper and Copper Alloy Tube
C 5—*10*	Specification for Quicklime for Structural Purposes
C 27—98 (*2008*)	Specification for Standard Classification of Fireclay and High-alumina Refractory Brick
C 28/C 28M—*10*	Specification for Gypsum Plasters
C 33—*08*	Specification for Concrete Aggregates

C 34—*08*	Specification for Structural Clay Load-bearing Wall Tile C 35—01(2005) Specification for Inorganic Aggregates for Use in Gypsum Plaster
C 36/C 36M—03	Specification for Gypsum Wallboard
C 37/C 37M—01	Specification for Gypsum Lath
C 55—*09*	Specification for Concrete Building Brick
C 59/C 59M—00 (2006)	Specification for Gypsum Casting and Molding Plaster
C 61/C 61M—00 (2006)	Specification for Gypsum Keene's Cement
C 62—*10*	Specification for Building Brick (Solid Masonry Units Made from Clay or Shale)
C 73—05	Specification for Calcium Silicate Face Brick (Sand Lime Brick)
C 79—04a	Specification for Treated Core and Nontreated Core Gypsum Sheathing Board
C 90—*09*	Specification for Load-bearing Concrete Masonry Units
C 91—05	Specification for Masonry Cement
C 94/C 94M—*10*	Specification for Ready-mixed Concrete
C 129—06	Specification for Nonload-bearing Concrete Masonry Units
C 143/C 143M—*10a*	Test Method for Slump or Hydraulic Cement Concrete
C 145—85	Specification for Solid Load-bearing Concrete Masonry Units
C 150—*09*	Specification for Portland Cement
C 199—84 (2005)	Test Method for Pier Test for Refractory Mortar
C 203—05a	Standard Test Methods for Breaking Load and Flexural Properties of Block-type Thermal Insulation
C 207—06	Specification for Hydrated Lime for Masonry Purposes
C 208—*08a*	Specification for Cellulosic Fiber Insulating Board
C 216—*10*	Specification for Facing Brick (Solid Masonry Units Made from Clay or Shale)
C 270—*10*	Specification for Mortar for Unit Masonry
C 272—01 *(2007)*	Standard Test Method for Water Absorption of Core Materials for Structural Sandwich Constructions
C 273—*07a*	Standard Test Method for Shear Properties of Sandwich Core Materials

C 315—07	Specification for Clay Flue Liners and Chimney Pots
C 406—*10*	Specifications for Roofing Slate
C 411—05	Test Method for Hot-surface Performance of High-temperature Thermal Insulation
C 475/C 475—*02(2007)*	Specification for Joint Compound and Joint Tape for Finishing Gypsum Wallboard
C 476—*10*	Specification for Grout for Masonry
C 514—04 *(2009)e1*	Specification for Nails for the Application of Gypsum Wallboard
C 552—*07*	Standard Specification for Cellular Glass Thermal Insulation
C 557—03 *(2009)e1*	Specification for Adhesives for Fastening Gypsum Wallboard to Wood Framing
C 578—*10*	Specification for Rigid, Cellular Polystyrene Thermal Insulation
C 587—04 *(2009)*	Specification for Gypsum Veneer Plaster
C 588/C 588M—*03e1*	Specification for Gypsum Base for Veneer Plasters
C 595—*10*	Specification for Blended Hydraulic Cements
C 630/C 630M—03	Specification for Water-resistant Gypsum Backing Board
C 631—*09*	Specification for Bonding Compounds for Interior Gypsum Plastering
C 645—*09a*	Specification for Nonstructural Steel Framing Members
C 652—*10*	Specification for Hollow Brick (Hollow Masonry Units Made from Clay or Shale)
C 685—*10*	Specification for Concrete Made by Volumetric Batching and Continuous Mixing
C 728—05 *(2010)*	Standard Specification for Perlite Thermal Insulation Board
C 836*/C836M-10*	Specification for High Solids Content, Cold Liquid-applied Elastomeric Waterproofing Membrane for Use with Separate Wearing Course
C 843—99 (2006)	Specification for Application of Gypsum Veneer Plaster
C 844—*10*	Specification for Application of Gypsum Base to Receive Gypsum Veneer Plaster
C 847—*10a*	Specification for Metal Lath

C 887—05 *(2010)*	Specification for Packaged, Dry, Combined Materials for Surface Bonding Mortar
C 897—05 *(2009)*	Specification for Aggregate for Job-mixed Portland Cement-based Plasters
C 920—*10*	Standard Specification for Elastomeric Joint Sealants
C 926—*06*	Specification for Application of Portland Cement-based Plaster
C 931/C 931M—04	Specification for Exterior Gypsum Soffit Board
C 933—*09*	Specification for Welded Wire Lath
C 954—*10*	Specification for Steel Drill Screws for the Application of Gypsum Panel Products or Metal Plaster Bases to Steel Studs from 0.033 in. (0.84 mm) to 0.112 in. (2.84 mm) in Thickness
C 955—*09a*	Specification for Load-bearing (Transverse and Axial) Steel Studs, Runners (Tracks), and Bracing or Bridging for Screw Application of Gypsum Panel Products and Metal Plaster Bases
C 957—*10*	Specification for High-solids Content, Cold Liquid-applied Elastomeric Waterproofing Membrane for Use with Integral Wearing Surface
C 960—04	Specification for Predecorated Gypsum Board
C 1002—*07*	Specification for Steel Drill Screws for the Application of Gypsum Panel Products or Metal Plaster Bases
C 1029—*10*	Specification for Spray-applied Rigid Cellular Polyurethane Thermal Insulation
C 1032—06	Specification for Woven Wire Plaster Base
C 1047—*10a*	Specification for Accessories for Gypsum Wallboard and Gypsum Veneer Base
C 1063—*08*	Specification for Installation of Lathing and Furring to Receive Interior and Exterior Portland Cement-based Plaster.
C 1107—*08*	Standard Specification for Packaged Dry, Hydraulic-cement Grout (Nonshrink)
C 1116—*10*	Standard Specification for Fiber-reinforced Concrete and Shotcrete
C 1167—03 *(2009)*	Specification for Clay Roof Tiles
C 1177/C 1177M—*08*	Specification for Glass Mat Gypsum Substrate for Use as Sheathing

C 1178/C 1178M—*08*	Specification for Glass Mat Water-resistant Gypsum Backing Panel
C 1186—*08*	Specification for Flat Nonasbestos Fiber Cement Sheets
C 1261—*10*	Specification for Firebox Brick for Residential Fireplaces
C 1278/C 1278M—*07a*	Specification for Fiber-reinforced Gypsum Panels
C 1283—07*a*	Practice for Installing Clay Flue Lining
C 1288—99(*2010*)	Standard Specification for Discrete Nonasbestos Fiber-cement Interior Substrate Sheets
C 1289—*10*	Standard Specification for Faced Rigid Cellular Polyisocyanurate Thermal Insulation Board
C 1325—*08b*	Standard Specification for Nonasbestos Fiber-mat Reinforced Cement Interior Substrate Sheets.
C 1328—05	Specification for Plastic (Stucco) Cement.
C *1395/C 1395M*—06a	Specification for Gypsum Ceiling Board
C 1396/C 1396M—*09a*	Specification for Gypsum Board.
C 1492—03*(2009)*	Specification for Concrete Roof Tile
C 1513—*10*	Standard Specification for Steel Tapping Screws for Cold-formed Steel Framing Connections
C 1658/C 1658M—06	Standard Specification for Glass Mat Gypsum Panels
D 41—05 *(2010)*	Specification for Asphalt Primer Used in Roofing, Dampproofing and Waterproofing
D 43—00(2006)	Specification for Coal Tar Primer Used in Roofing, Dampproofing and Waterproofing
D 225—*07*	Specification for Asphalt Shingles (Organic Felt) Surfaced with Mineral Granules
D 226*/D 226M—09*	Specification for Asphalt-saturated (Organic Felt) Used in Roofing and Waterproofing
D 227—03	Specification for Coal Tar Saturated (Organic Felt) Used in Roofing and Waterproofing
D 312—00(2006)	Specification for Asphalt Used in Roofing.
D 422—63 *(2007)*	Test Method for Particle-size Analysis of Soils
D 449—03 *(2008)*	Specification for Asphalt Used in Dampproofing and Waterproofing.
D 450—07	Specification for Coal-tar Pitch Used in Roofing, Dampproofing and Waterproofing
D 1227—95(2007)	Specification for Emulsified Asphalt Used as a Protective Coating for Roofing

D 1248—05	Specification for Polyethylene Plastics Extrusion Materials for Wire and Cable
D 1622—*08*	Standard Test Method for Apparent Density of Rigid Cellular Plastics
D 1623—*09*	Standard Test Method for Tensile and Tensile Adhesion Properties of Rigid Cellular Plastics
D 1693—*08*	Test Method for Environmental Stress-cracking of Ethylene Plastics
D 1784—*08*	Standard Specification for Rigid Poly (Vinyl Chloride) (PVC) Compounds and Chlorinated Poly (Vinyl Chloride) (CPVC) Compounds
D 1863—05	Specification for Mineral Aggregate Used in Built-up Roofs
D 1970—*09*	Specification for Self-adhering Polymer Modified Bitumen Sheet Materials Used as Steep Roofing Underlayment for Ice Dam Protection
D 2126—*09*	Standard Test Method for Response of Rigid Cellular Plastics to Thermal and Humid Aging
D 2178—04	Specification for Asphalt Glass Felt Used in Roofing and Waterproofing
D 2412—*10*	Test Method for Determination of External Loading Characteristics of Plastic Pipe by Parallel-plate Loading
D 2447—03	Specification for Polyethylene (PE) Plastic Pipe Schedules 40 and 80, Based on Outside Diameter
D 2513—*09a*	Specification for Thermoplastic Gas Pressure Pipe, Tubing and Fittings
D 2559—*10a*	Standard Specification for Adhesives for Structural Laminated Wood Products for Use Under Exterior (West Use) Exposure Conditions
D 2626—04	Specification for Asphalt-saturated and Coated Organic Felt Base Sheet Used in Roofing
D 2683—*10*	Specification for Socket-type Polyethylene Fittings for Outside Diameter-controlled Polyethylene Pipe and Tubing
D 2822—05	Specification for Asphalt Roof Cement
D 2823—05	Specification for Asphalt Roof Coatings
D 2824—06	Specification for Aluminum-pigmented Asphalt Roof Coatings, Nonfibered, Asbestos Fibered and Fibered without Asbestos

D 2837—*08*	Test Method for Obtaining Hydrostatic Design Basis for Thermoplastic Pipe Materials or Pressure Design Basis for Thermoplastic Pipe Products
D 2846/D 2846M—*09b*	Specification for Chlorinated Poly (Vinyl Chloride) (CPVC) Plastic Hot- and Cold-water Distribution Systems
D 2898—*10*	Test Methods for Accelerated Weathering of Fire-retardant-treated Wood for Fire Testing
D 3019—*08*	Specification for Lap Cement Used with Asphalt Roll Roofing, Nonfibered, Asbestos Fibered and Nonasbestos Fibered.
D 3035—*08*	Specification for Polyethylene (PE) Plastic Pipe (DR-PR) Based On Controlled Outside Diameter
D 3161—*09*	Test Method for Wind Resistance of Asphalt Shingles (Fan Induced Method)
D 3201—*08ae1*	Test Method for Hygroscopic Properties of Fire-retardant Wood and Wood-base Products
D 3309—96a (2002)	Specification for Polybutylene (PB) Plastic Hot- and Code-water Distribution System
D 3350—*10*	Specification for Polyethylene Plastic Pipe and Fitting Materials
D 3462/D 3462M—*10a*	Specification for Asphalt Shingles Made From Glass Felt and Surfaced with Mineral Granules.
D 3468—99 (2006)e01	Specification for Liquid-applied Neoprene and Chlorosulfanated Polyethylene Used in Roofing and Waterproofing
D 3679—*09a*	Specification for Rigid Poly (Vinyl Chloride) (PVC) Siding
D 3737—*09*	Practice for Establishing Allowable Properties for Structural Glued Laminated Timber (Glulam)
D 3747—79 (2007)	Specification for Emulsified Asphalt Adhesive for Adhering Roof Insulation
D 3909—97b (2004)e01	Specification for Asphalt Roll Roofing (Glass Felt) Surfaced with Mineral Granules
D 3957—*09*	Standard Practices for Establishing Stress Grades for Structural Members Used in Log Buildings
D 4022—07	Specification for Coal Tar Roof Cement, Asbestos Containing
D 4318—*10*	Test Methods for Liquid Limit, Plastic Limit and Plasticity Index of Soils

D 4434*/D 4434—09*	Specification for Poly (Vinyl Chloride) Sheet Roofing
D 4479—07	Specification for Asphalt Roof Coatings-asbestos-free
D 4586—*07*	Specification for Asphalt Roof Cement-asbestos-free
D 4601—04	Specification for Asphalt-coated Glass Fiber Base Sheet Used in Roofing
D 4637*/D 4637M—10*	Specification for EPDM Sheet Used in Single-ply Roof Membrane
D 4829—*08a*	Test Method for Expansion Index of Soils
D 4869—05e01	Specification for Asphalt-saturated (Organic Felt) Underlayment Used in Steep Slope Roofing
D 4897/*D 4897M*—01*(2009)*	Specification for Asphalt Coated Glass-fiber Venting Base Sheet Used in Roofing
D 4990—97a (2005)e01	Specification for Coal Tar Glass Felt Used in Roofing and Waterproofing
D 5019—07*a*	Specification for Reinforced Nonvulcanized Polymeric Sheet Used in Roofing Membrane
D 5055—*10*	Specification for Establishing and Monitoring Structural Capacities of Prefabricated Wood I-joists
D 5516—*09*	Test Method for Evaluating the Flexural Properties of Fire-retardant-treated Softwood Plywood Exposed to the Elevated Temperatures
D 5643—06	Specification for Coal Tar Roof Cement Asbestos-free
D 5664—*10*	Test Methods For Evaluating the Effects of Fire-retardant Treatments and Elevated Temperatures on Strength Properties of Fire-retardant-treated Lumber
D 5665—99a(2006)	Specification for Thermoplastic Fabrics Used in Cold-applied Roofing and Waterproofing
D 5726—98(2005)	Specification for Thermoplastic Fabrics Used in Hot-applied Roofing and Waterproofing
D 6083—05e01	Specification for Liquid-applied Acrylic Coating Used in Roofing
D 6162—*08*	Specification for Styrene Butadiene Styrene (SBS) Modified Bituminous Sheet Materials Using a Combination of Polyester and Glass Fiber Reinforcements

D 6163—00 *(2008)*	Specification for Styrene Butadiene Styrene (SBS) Modified Bituminous Sheet Materials Using Glass Fiber Reinforcements
D 6164—05*e1*	Specification for Styrene Butadiene Styrene (SBS) Modified Bituminous Sheet Materials Using Polyester Reinforcements
D 6222—*08*	Specification for Atactic Polypropelene (APP) Modified Bituminous Sheet Materials Using Polyester Reinforcement.
D 6223/*D 6223M*—02*(2009)*e01	Specification for Atactic Polypropelene (APP) Modified Bituminous Sheet Materials Using a Combination of Polyester and Glass Fiber Reinforcement
D 6298—05 *e1*	Specification for Fiberglass-reinforced Styrene Butadiene Styrene (SBS) Modified Bituminous Sheets with a Factory Applied Metal Surface
D 6305—*08*	Practice for Calculating Bending Strength Design Adjustment Factors for Fire-retardant-treated Plywood Roof Sheathing
D 6380—03*(2008)*	Standard Specification for Asphalt Roll Roofing (Organic Felt)
D 6694—*08*	Standard Specification Liquid-applied Silicone Coating Used in Spray Polurethane Foam Roofing
D 6754*/D 6754M—10*	Standard Specification for Ketone-ethylene-ester-based Sheet Roofing2
D 6757—07	Standard Specification for Inorganic Underlayment for Use with Steep Slope Roofing Products.
D 6841—*08*	Standard Practice for Calculating Design Value Treatment Adjustment Factors for Fire-retardant-treated Lumber
D 6878—*08e1*	Standard Specification for Thermoplastic-polyolefin-based Sheet Roofing.
D 6947—07	Standard Specification for Liquid Applied Moisture Cured Polyurethane Coating Used in Spray Polyurethane Foam Roofing System
D 7032—*10a*	Standard Specification for Establishing Perfomance Ratings for Wood-plastic Composite Deck Boards and Guardrail Systems (Guards or Handrails).
D 7158—*08d*	Standard Test Method for Wind Resistance of Sealed Asphalt Shingles (Uplift Force/ Uplift Resistance Method

E 84—*10b*	Test Method for Surface Burning Characteristics of Building Materials
E 90—04	Test Method for Laboratory Measurement of Airborne Sound Transmission Loss of Building Partitions and Elements
E 96/E 96M—05	Test Method for Water Vapor Transmission of Materials
E 108—*10a*	Test Methods for Fire Tests of Roof Coverings
E 119—*10b*	Test Methods for Fire Tests of Building Construction and Materials
E 136—*09b*	Test Method for Behavior of Materials in a Vertical Tube Furnace at 750°C
E 283—04	Test Method for Determining the Rate of Air Leakage through Exterior Windows, Curtain Walls and Doors Under Specified Pressure Differences Across the Specimen
E 330—02 *(2010)*	Test Method for Structural Performance of Exterior Windows, Curtain Walls and Doors by Uniform Static Air Pressure Difference
E 331—00 *(2009)*	Test Method for Water Penetration of Exterior Windows, Skylights, Doors and Curtain Walls by Uniform Static Air Pressure Difference
E 492—*09*	Specification for Laboratory Measurement of Impact Sound Transmission through Floor-ceiling Assemblies Using the Tapping Machine
E 814—*10*	Test Method for Fire Tests of Through-penetration Firestops
E 970—*10*	Test Method for Critical Radiant Flux of Exposed Attic Floor Insulation Using a Radiant Heat Energy Source
E 1509—04	Standard Specification for Room Heaters, Pellet Fuel-burning Type
E 1602—03*(2010)e1*	Guide for Construction of Solid Fuel Burning Masonry Heaters
E 1886—*05*	Test Method for Performance of Exterior Windows, Curtain Walls, Doors and Storm Shutters Impacted by Missles and Exposed to Cyclic Pressure Differentials
E 1996—*09*	Standard Specification for Performance of Exterior Windows, Curtain Walls, Doors and Impact

	Protective Systems Impacted by Windborne Debris in Hurricanes
E 2178—03	Standard Test Method for Air Permeance of Building Materials
E 2231—*09*	Standard Practice for Specimen Preparation and Mounting of Pipe and Duct Insulation Materials to Assess Surface Burning Characteristics
E 2273—03	Standard Test Method for Determining the Drainage Efficiency of Exterior Insulation and Finish Systems (EIFS) Clad Wall Assemblies
E 2568—*09e1*	Standard Specification for PB Exterior Insulation and Finish Systems (EIFS)
E 2570—07	Standard Test Methods for Evaluating Water-resistive Barrier (WRB) Coatings Used Under Exterior Insulation and Finish Systems (EIFS) or EIFS with Drainage
F 876—*10*	Specification for Cross-linked Polyethylene (PEX) Tubing
F 877—07	Specification for Cross-linked Polyethylene (PEX) Plastic Hot-and Cold-water Distribution Systems
F 1055—98(2006)	Specification for Electrofusion Type Polyethylene Fittings for Outside Diameter Controlled Polyethylene Pipe and Fittings
F 1281—07	Specification for Cross-linked Polyethylene/Aluminum/Cross-linked Polyethylene (PEX-AL-PEX) Pressure Pipe
F 1282—*10*	Specification for Polyethylene/Aluminum/Polyethylene (PE-AL-PE) Composite Pressure Pipe
F 1554—*07a*	Specification for Anchor Bolts, Steel, 36, 55 and 105-ksi Yield Strength
F 1667—*10*	Specification for Driven Fasteners, Nails, Spikes and Staples
F 1807—*10e1*	Specification for Metal Insert Fittings Utilizing a Copper Crimp Ring for SDR9 Cross-linked Polyethylene (PEX) Tubing
F 1960—*10*	Specification for Cold Expansion Fittings with PEX Reinforcing Rings for Use with Cross-linked Polyethylene (PEX) Tubing
F 1973—*08*	Standard Specification for Factory Assembled Anodeless Risers and Transition Fittings in

	Polyethylene (PE) and Polyamide 11 (PA 11) Fuel Gas Distribution Systems
F 2090—*10*	Specification for Window Fall Prevention Devices—with Emergency Escape (Egress) Release Mechanisms
F 2098—*08*	Standard Specification for Stainless Steel Clamps for SDR9 PEX Tubing to Metal Insert Fittings
F 2389—*10*	Standard for Pressure-rated Polypropylene (PP) Piping Systems
F 2623—*08*	Standard Specification for Polyethylene of Raised Temperature (PE-RT) SDRG Tubing

American Wood Protection Association
P.O. Box 361784
Birmingham, AL 35236-1784

AWPA

Standard reference number	**Title**
C1—03	All Timber Products—Preservative Treatment by Pressure Processes
M4—06	Standard for the Care of Preservative-treated Wood Products
U1—*10*	USE CATEGORY SYSTEM: User Specification for Treated Wood Except Section 6 Commodity Specification H

Canadian General Standards Board
Place du Portage 111, 6B1 11 Laurier Street
Gatineau, Quebec, Canada KIA 1G6

CGSB

Standard reference number	**Title**
37-GP—52M—(1984)	Roofing and Waterproofing Membrane, Sheet Applied, Elastomeric
37-GP—56M—(*1985*)	Membrane, Modified Bituminous, Prefabricated and Reinforced for Roofing—with December 1985 Amendment
CAN/CGSB-37.54—95	Polyvinyl Chloride Roofing and Waterproofing Membrane

Composite Panel Association
19465 Deerfield Avenue, Suite 306
Leesburg, VA 20176

CPA Standard reference number	**Title**
ANSI A135.4—04	Basic Hardboard
ANSI A135.5—04	Prefinished Hardboard Paneling
ANSI A135.6—*06*	Hardboard Siding

Consumer Product Safety Commission
4330 East West Highway
Bethesda, MD 20814-4408

CPSC Standard reference number	**Title**
16 CFR Part 1201—(1977)	Safety Standard for Architectural Glazing
16 CFR Part 1209—(1979)	Interim Safety Standard for Cellulose Insulation
16 CFR Part 1404—(1979)	Cellulose Insulation

Canadian Standards Association
5060 Spectrum Way
Mississauga, Ontario, Canada L4N 5N6

CSA Standard reference number	**Title**
CSA Requirement 3—88	Manually Operated Gas Valves for Use in House Piping Systems
CSA 8-93	Requirements for Gas Fired Log Lighters for Wood Burning Fireplaces—with Revisions through January 1999
O325—07	Construction Sheathing

O437-Series—93	Standards on OSB and Waferboard (Reaffirmed 2006)
101/I.S.2/A440—08	Specifications for Windows, Doors and Unit Skylights
CAN/CSA B137.10M—*09*	Cross-linked Polyethylene/Aluminum/Polyethylene Composite Pressure Pipe Systems

Cedar Shake & Shingle Bureau
P. O. Box 1178
Sumas, WA 98295-1178

CSSB Standard reference number	**Title**
CSSB—97	Grading and Packing Rules for Western Red Cedar Shakes and Western Red Shingles of the Cedar Shake and Shingle Bureau

Door and Access Systems Manufacturers Association International
1300 Summer Avenue
Cleveland, OH 44115-2851

DASMA Standard reference number	**Title**
108—05	Standard Method for Testing Garage Doors: Determination of Structural Performance Under Uniform Static Air Pressure Difference

United States Department of Commerce
1401 Constitution Avenue, NW
Washington, DC 20230

DOC Standard reference number	**Title**
PS 1—07	Structural Plywood

PS 2—04	Performance Standard for Wood-based Structural-use Panels
R803.2.1/ PS 20—05	American Softwood Lumber Standard

Department of Transportation
1200 New Jersey Avenue SE East Building, 2nd floor
Washington, DC 20590

DOTn Standard reference number	**Title**
49 CFR, Parts 192.281(e) & 192.283 (b)	Transportation of Natural and Other Gas by Pipeline: Minimum Federal Safety Standards

Federal Emergency Management Agency
500 C Street, SW
Washington, DC 20472

FEMA Standard reference number	**Title**
TB-2—*08*	Flood Damage-Resistant Materials Requirements
FIA-TB-11—01	Crawlspace Construction for Buildings Located in Special Flood Hazard Area

Factory Mutual Global Research Standards Laboratories
Department 1301 Atwood Avenue, P. O. Box 7500
Johnson, RI 02919

FM Standard reference number	**Title**
4450—(1989)	Approval Standard for Class 1 Insulated Steel Deck Roofs—with Supplements through July 1992
4880—(*2010*)	American National Standard for Evaluating Insulated Wall or Wall and Roof/Ceiling Assemblies, Plastic Interior Finish Materials, Plastic Exterior Building Panels,

	Wall/Ceiling Coating Systems, Interior or Exterior Finish Systems

Gypsum Association
810 First Street, Northeast, Suite 510
Washington, DC 20002-4268

GA

Standard reference number	**Title**
GA-253—07	Application of Gypsum Sheathing

Hardwood Plywood & Veneer Association
1825 Michael Faraday Drive
Reston, Virginia 20190-5350

HPVA

Standard reference number	**Title**
HP-1—*2009*	The American National Standard for Hardwood and Decorative Plywood

International Code Council, Inc.
500 New Jersey Avenue, NW 6th Floor
Washington, DC 20001

ICC

Standard reference number	**Title**
ICC/ANSI A117.1 - *09*	Accessible and Usable Buildings and Facilities
ICC 400 - *07*	Standard on the Design and Construction of Log Structures
ICC 500 - 08	ICC/NSSA Standard on the Design and Construction of Storm Shelters
ICC 600 - 08	Standard for Residential Construction in High Wind Regions
IEBC-09	International Existing Buildings Code

IECC - 09	International Energy Conservation Code *(adoption includes only section 101 of chapter 1 and chapters 2 through 6)*
IFGC - 09	International Fuel Gas Code *(including ICC Emergency Amendment changing section 406.7)*

International Organization for Standardization
1, ch. de la Voie -Creuse Case postale 56 CH-1211
Geneva 20, Switzerland

ISO

Standard reference number	**Title**
15874—*03*	Polypropylene Plastic Piping Systems for Hot and Cold Water Installations

Manufacturers Standardization Society of the Valve and Fittings Industry
127 Park Street, Northeast
Vienna, VA 22180

MSS

Standard reference number	**Title**
SP-58—*09*	Pipe Hangers and Supports—Materials, Design and Manufacture

North American Insulation Manufacturers Association
44 Canal Center Plaza, Suite 310
Alexandria, VA 22314

NAIMA

Standard reference number	**Title**
AH 116—02	Fibrous Glass Duct Construction Standards, Fifth Edition

National Concrete Masonry Association
13750 Sunrise Valley Drive
Herndon, VA 20171-4662

NCMA Standard reference number	**Title**
TR 68-A—75	Design and Construction of Plain and Reinforced Concrete Masonry and Basement and Foundation Walls

National Fire Protection Association
1 Batterymarch Park
Quincy, MA 02269

NFPA Standard reference number	**Title**
13—*10*	Installation of Sprinkler Systems *(including TIA 10-2)*
13D—*10*	Standard for the Installation of Sprinkler Systems in One- and Two-family Dwellings and Manufactured Homes *(including TIA 10-2)*
13R-10	*Standard for the Installation of Sprinkler Systems in Residential Occupancies up to and Including Four Stories in Height (including TIA 10-2)*
30-15	*Flammable and Combustible Liquids Code*
31—~~06~~*11*	Installation of Oil-burning Equipment
37-10	*Standard for the Installation and Use of Stationary Combustion Engines and Gas Turbines*
58—*11*	Liquefied Petroleum Gas Code
70—*11*	National Electrical Code
72—*10*	National Fire Alarm *and Signaling* Code
85—07	Boiler and Construction Systems Hazards Code
110-10	*Standard for Emergency and Standby Power Systems*
111-10	*Standard on Stored Electrical Energy Emergency and Standby Power Systems*
211—*10*	Chimneys, Fireplaces, Vents and Solid Fuel Burning Appliances
259—*08*	Test Method for Potential Heat of Building Materials
286—06	Standard Methods of Fire Tests for Evaluating Contribution of Wall and Ceiling Interior Finish to Room Fire Growth
501—05	Standard on Manufactured Housing

853—*10*	Standard for the Installation of Stationary Fuel Cell Power Systems

National Fenestration Rating Council Inc.
8484 Georgia Avenue, Suite 320
Silver Spring, MD 20910

NFRC Standard reference number	**Title**
100—*10*	Procedure for Determining Fenestration Product U-factors
200—*10*	Procedure for Determining Fenestration Product Solar Heat Gain Coefficients and Visible Transmittance at Normal Incidence
400—*10*	Procedure for Determining Fenestration Product Air Leakage

Portland Cement Association
5420 Old Orchard Road
Skokie, IL 60077

PCA Standard reference number	**Title**
100—07	Prescriptive Design of Exterior Concrete Walls for One- and Two-family Dwellings (Pub. No. EB241)

Sheet Metal & Air Conditioning Contractors National Assoc. Inc.
4021 Lafayette Center Road
Chantilly, VA 22021

SMACNA Standard reference number	**Title**
SMACNA—03	Fibrous Glass Duct Construction Standards (2003)

The Masonry Society
3970 Broadway, Suite 201-D

Boulder, CO 80304

TMS Standard reference number	**Title**
302—07	Standard Method for Determining the Sound Transmission Class Rating for Masonry Walls
402—*08*	Building Code Requirements for Masonry Structures
602—*08*	Specification for Masonry Structures

Truss Plate Institute
583 D'Onofrio Drive, Suite 200
Madison, WI 53719

TPI Standard reference number	**Title**
TPI 1—*2007*	National Design Standard for Metal-plate-connected Wood Truss Construction

Underwriters Laboratories, Inc.
333 Pfingsten Road
Northbrook, IL 60062

UL Standard reference number	**Title**
17—*08*	Vent or Chimney Connector Dampers for Oil-fired Appliances
58—96	Steel Underground Tanks for Flammable and Combustible Liquids—with Revisions through July 1998
80—*07*	Steel Tanks for Oil-burner Fuel
103—*10*	Factory-built Chimneys for Residential Type and Building Heating Appliances
127—*08*	Factory-built Fireplaces
174—04	Household Electric Storage Tank Water Heaters—with Revisions through November 2005
181—05	Factory-made Air Ducts and Air Connectors

181A—05	Closure Systems for Use with Rigid Air Ducts and Air Connectors
181B—05	Closure Systems for Use with Flexible Air Ducts and Air Connectors
217—06	Single- and Multiple-station Smoke Alarms
263—03	Standards for Fire Test of Building Construction and Materials
325—02	Standard for Door, Drapery, Gate, Louver and Window Operations and Systems—with Revisions through February 2006
343—*08*	Pumps for Oil-burning Appliances
441—*10*	Gas Vents
508—99	Industrial Control Equipment—with Revisions through July 2005
536—97	Flexible Metallic Hose—with Revisions through June 2003
641—95	Type L, Low-temperature Venting Systems—with Revisions through August 2005
651—05	Schedule 40 and Schedule 80 Rigid PVC Conduit and Fittings
723—*08*	Standard for Test for Surface Burning Characteristics of Building Materials
726—95	Oil-fired Boiler Assemblies—with Revisions through March 2006
727—06	Oil-fired Central Furnaces
729—03	Oil-fired Floor Furnaces
730—03	Oil-fired Wall Furnaces
732—95	Oil-fired Storage Tank Water Heaters
737—*07*	Fireplaces Stoves
790—04	Standard Test Methods for Fire Tests of Roof Coverings
795—06	Commercial-industrial Gas Heating Equipment.
834—04	Heating, Water Supply and Power Boilers-Electric
896—93	Oil-burning Stoves—with Revisions through May 2004
923—*08*	Microwave Cooking Appliances-
959—01	Medium Heat Appliance Factory-built Chimneys—with Revisions through September 2006
1040—96	Fire Test of Insulated Wall Construction—with Revisions through June 2001
1256—02	Fire Test of Roof Deck Construction.
1261—01	Electric Water Heaters for Pools and Tubs—with Revisions through June 2004

1453—04	Electronic Booster and Commercial Storage Tank Water Heaters
1479—03	Fire Tests of Through-penetration Firestops
1482—*10*	Solid-fuel-type Room Heaters
1715—97	Fire Test of Interior Finish Material—with Revisions through March 2004
1738—*10*	Venting Systems for Gas-burning Appliances, Categories II, III and IV
1777—07	Standard for Chimney Liners
1995—05	Heating and Cooling Equipment.
2017—*08*	Standard for General-purpose Signaling Devices and Systems—with Revisions through June 2004
2034—08	Standard for Single- and Multiple-station Carbon Monoxide Alarms.
2158A—*10*	Outline of Investigation for Clothes Dryer Transition Duct
2200-12	*Stationary Engine Generator Assemblies*

Underwriters' Laboratories of Canada
7 Underwriters Road Toronto,
Ontario, Canada M1R 3B4

ULC Standard reference number	**Title**
CAN/ULC S 102—*10*	Standard Methods for Test for Surface Burning Characteristics of Building Materials and Assemblies

United States - Federal Trade Commission
600 Pennsylvania Avenue NW
Washington, DC 20580

US-FTC Standard reference number	**Title**
CFR Title 16 Part 460	R-value Rule

Window & Door Manufacturers Association
1400 East Touhy Avenue, Suite 470

Des Plaines, IL 60018

WDMA Standard reference number	**Title**
AAMA/WDMA/CSA 101/I.S2/A440—08	Specifications for Windows, Doors and Skylights