Ohio | Department of Commerce
Division of Industrial Compliance
John R. Kasich, Governor
Jacqueline T. Williams, Director

December 2017

At its meeting on December 15, 2017, the Ohio Board of Building Standards adopted the rule changes identified as Amendments Group 94. These rule amendments were adopted with an **effective date of January 1, 2018.**

Amendments Group 94 included the amended Residential Code of Ohio rules shown below. For your use, the complete text of the final-filed rules can be found following this coversheet.

Rule Number	Action	Residential Code of Ohio Rule Title	Effective date
4101:8-1-01	Amend	Administration.	January 1, 2018
4101:8-5-01	Amend	Floors.	January 1, 2018
4101:8-6-01	Amend	Wall construction.	January 1, 2018
4101:8-44-01	Amend	Referenced standards.	January 1, 2018

Reason for Changes: The Board amended the Ohio Administrative Code rules as follows: **4101:8-1-01** to clarify the applicability of the Residential Code to manufactured homes; to add exemptions for other non-occupied structures; to clarify that when an owner uses prescriptive requirements of the RCO as alternative compliance option for commercial building, the building remains within the scope of the OBC; to clarify that an owner may install battery operated smoke and carbon monoxide alarms without obtaining approval when no other construction is taking place; to clarify applicability of electrical code to bodies of water as defined in the National Electrical Code; to permit replacement of one plumbing fixture to be exempt from approval; to incorporate enforcement options for park districts from RC 3781.10(E)(9); to require the residential building official to identify special conditions that may affect timing of inspections and work with the building owner to establish mutually agreed upon inspection times; to add option for issuance of certificate of completion instead of certificate of occupancy for alterations and repairs; to permit residential building officials to accept evaluation service (ES) reports for alternative compliance; and to make general editorial changes and clarifications**; 4101:8-5-01** to add new requirements for securing beam-to-foundation and beam-to-column connections in response to petition #16-11**; 4101:8-6-01** to add new requirements for securing beam-to-foundation and beam-to-column connections in response to petition #16-11**;** and **4101:8-44-01** to update the reference to the Ohio Plumbing Code to include pipe testing amendments adopted through October 2016.

If you should have any questions regarding these rule changes, please call BBS staff at (614)644-2613.

Ohio Board of Building Standards
6606 Tussing Road
Reynoldsburg, OH 43068-9009

614-644-2613
Fax 614 -644-3147
TTY/TDD 800-750-0750
com.ohio.gov

Gerald Holland, Chairman
An Equal Opportunity Employer and Service Provider

4101:8-1-01 Administration.

[Comment: When a reference is made within this rule to a federal statutory provision, an industry consensus standard, or any other technical publication, the specific date and title of the publication as well as the name and address of the promulgating agency are listed in rule ~~4101:8-43-01~~ 4101:8-44-01 of the Administrative Code. The application of the referenced standards shall be limited and as prescribed in section 102.5 of rule 4101:8-1-01 of the Administrative Code.]

SECTION 101
GENERAL

101.1 Title. *Chapters 4101:8-1 to 4101:8-25, 4101:8-29, 4101:8-34, and 4101:8-44 of the Administrative Code are designated as the "Residential Code of Ohio for One-, Two-, and Three-Family Dwellings" for which the designation "RCO" may be substituted. The 2009 edition of the "International Residential Code", first printing, Chapters 2 through 24, 29, and 44 as published by the "International Code Council, Inc." is used as the basis of this document as is incorporated fully except as modified in italic herein. References in these chapters to "this code", to the "residential code", or to the "Residential Code of Ohio" in other sections of the Administrative Code shall mean the "Residential Code of Ohio for One-, Two-, and Three-Family Dwellings".*

101.2 Scope. *The provisions of the "Residential Code of Ohio for One-, Two-, and Three-Family Dwellings" shall apply to the construction, alteration, movement, enlargement, replacement, repair, equipment, use and occupancy, location, maintenance, removal, and demolition of every one-, two-, or three-family dwelling, any appurtenances connected or attached to such buildings or structures, or any accessory structure incidental to that dwelling house including electrical equipment associated with bodies of water as defined in article 680 of NFPA 70 as referenced in part IX, chapter 44. This code also applies to a one-family, two-family, or three-family dwelling house that is used as a model to promote the sale of a similar dwelling house. No building or its equipment or accessories, to which the rules of the board apply shall be erected, constructed, or installed, except in conformity with the rules of the board.*

This code also applies to such other residential occupancies as referenced and to the extent indicated in section 310 of the "OBC".

Exceptions:

1. *Manufactured ~~home units~~ homes constructed under "24 CFR Part 3280," "Manufactured Home Construction and Safety Standards" and within the scope of the rules adopted by the Ohio Manufactured Home Commission. This exception does not apply to the utility connections from the utility service point to the manufactured homes, or to alterations of, additions to, or changes of occupancy of manufactured homes, except that a manufactured home located within a manufactured home park and used by the park operator to promote the sale/rental of manufactured homes in that park remains exempt.*

2. *Multiple single-family dwelling structures more than three stories in height and with more than three dwelling units.*

    a. *The structure of one-, two-, and three-family dwellings which are more than three stories in height shall comply with the structural requirements of the OBC or section 106.5 of this code.*

3. *Residential buildings attached to occupancies that are within the scope of the OBC shall comply with the requirements of the "OBC".*

4. *Buildings or structures containing two or three dwelling units with a shared exit shall comply with the requirements of the "OBC."*

5. *Buildings or structures which are incident to the use for agricultural purposes of the land on which said buildings or structures are located, provided such buildings or structures are not used in the business of retail trade; for the purposes of this section, a building or structure is not considered used in the business of retail trade if fifty per cent or more of the gross income received from sales of products in the building or structure by the owner or operator is from sales of products produced or raised in a normal crop year on farms owned or operated by the seller (see sections 3781.06 and 3781.061 of the Revised Code);*

6. *Agricultural labor camps;*

7. *Type A or Type B family day-care homes, except for the inspection required for licensure by the "Ohio Department of Jobs and Family Services (ODJFS)". This required inspection shall be conducted by the certified*

building department having jurisdiction in accordance with the inspection checklist found on the board of building standard's website.;

8. Buildings or structures which are designed, constructed, and maintained in accordance with federal standards and regulations and are used primarily for federal and state military purposes where the U.S. secretary of defense, pursuant to 10 U.S.C. Sections 18233(A)(1) and 18237, has acquired by purchase, lease, or transfer, and constructs, expands, rehabilitates, or corrects and equips, such buildings or structures as he determines to be necessary to carry out the purposes of Chapter 1803 of the U.S.C.

9. Sewerage systems, treatment works, and disposal systems (including the tanks, piping, and process equipment associated with these systems) regulated by the legislative authority of a municipal corporation or the governing board of a county or special district owning or operating a publicly owned treatment works or sewerage system as stated in division (A) of section 6111.032 of the Revised Code.

10. Building sewer piping.

11. Private water systems (including tanks, foundations, piping, and process equipment associated with these systems) regulated by the Ohio Department of Health in accordance with section 3701.344 of the Revised Code.

12. Wind turbines, pumps, site lighting, and flagpoles not connected to building services equipment.

13. The applicable provisions of the OBC shall apply when installing components, equipment, and systems for which there are no provisions in this code.

14. When buildings regulated by the OBC are permitted to use the construction requirements of this code, such buildings remain within the scope of the OBC.

101.3 Intent. *The purpose of this code is to establish uniform minimum requirements for the erection, construction, repair, alteration, and maintenance of residential buildings, including construction of industrialized units. Such*

requirements shall relate to the conservation of energy, safety, and sanitation of buildings for their intended use and occupancy with consideration for the following:

1. ***Performance.*** *Establish such requirements, in terms of performance objectives for the use intended. Further, the rules shall consider the following:*

   1.1 The impact that the state residential building code may have upon the health, safety, and welfare of the public;

   1.2 The economic reasonableness of the residential building code;

   1.3 The technical feasibility of the residential building code;

   1.4 The financial impact that the residential building code may have on the public's ability to purchase affordable housing.

2. ***Extent of use.*** *Permit to the fullest extent feasible, the use of materials and technical methods, devices, and improvements which tend to reduce the cost of construction without affecting minimum requirements for the health, safety, and security of the occupants of buildings without preferential treatment of types or classes of materials or products or methods of construction.*

3. ***Standardization.*** *To encourage, so far as may be practicable, the standardization of construction practices, methods, equipment, material and techniques, including methods employed to produce industrialized units.*

   This code does not prevent a local governing authority from adopting additional regulations governing residential structures if the regulations comply with this section.

   3.1. A local governing authority shall, and any person may, notify the board of building standards of any regulation the local governing authority adopts related to content within the scope of this code and request that the board of building standards ~~to~~ determine whether that regulation conflicts with the state residential building code.

   3.1.1. Not later than sixty days after receiving a notice to review local regulations for conflict, the board shall determine, based upon a

recommendation from the advisory committee, whether the regulation conflicts with the state residential building code and shall notify any person who submitted the notice and the local governing authority that adopted the regulation of the board's determination.

3.1.2 If the board determines that a conflict does not exist, the board shall take no further action with regard to the regulation. If the board determines a conflict exists and the regulation is not necessary to protect the health or safety of the persons within the local governing authority's jurisdiction, the regulation is not valid and the local governing authority may not enforce the regulation.

3.1.3 If the board determines that a conflict exists and that the regulation is necessary to protect the health or safety of the persons within the local governing authority's jurisdiction, the board shall adopt a rule to incorporate the regulation into the state residential building code. Until the rule becomes a part of the state residential building code, the board shall grant a temporary variance to the local governing authority and any similarly situated local governing authority to which the board determines the temporary variance should apply.

101.4 Reasonable application. *The rules of the board and proceedings shall be liberally construed in order to promote its purpose. When the residential building official finds that the proposed design is a reasonable interpretation of the provisions of this code, it shall be approved. Materials, equipment and devices approved by the building officials pursuant to section 114 shall be constructed and installed in accordance with such approval.*

SECTION 102
APPLICABILITY AND JURISDICTIONAL AUTHORITY

102.1 General. *Where, in any specific case, different sections of this code specify different materials, methods of construction or other requirements, the most restrictive shall govern. Where there is a conflict between a general requirement and a specific requirement, the specific requirement shall be applicable.*

102.2 Other laws. *The provisions of this code shall not be deemed to nullify any provisions of state or federal law. Municipal corporations may make further and additional regulations, not in conflict with Chapters 3781. and 3791. of the Revised*

Code or with the rules of the board of building standards. However approval by the board of building standards of any fixture, device, material, system, assembly or product of a manufacturing process, or method or manner of construction or installation shall constitute approval for their use anywhere in Ohio.

102.3 Rules of the board. *As provided in division (B) of section 3781.11 of the Revised Code, the rules of the board of building standards shall supersede and govern any order, standard, or rule of the divisions of state fire marshal or industrial compliance in the department of commerce, and the department of health and of counties and townships, in all cases where such orders, standards or rules are in conflict with the rules of the board of building standards, except that rules adopted and orders issued by the fire marshal pursuant to Chapter 3743. of the Revised Code prevail in the event of a conflict.*

The rules of the board of building standards adopted pursuant to section 3781.10 of the Revised Code shall govern any rule or standard adopted by the board pursuant to sections 4104.02 and 4105.011 of the Revised Code.

102.4 Application of references. *References to chapter or section numbers, or to provisions not specifically identified by number, shall be construed to refer to such chapter, section or provision of this code.*

102.5 Referenced codes and standards. *The codes and standards referenced in this code shall be considered part of the requirements of this code to the prescribed extent of each such reference. When a reference is made within the code to a federal statutory provision, an industry consensus standard, or any other technical publication, the specific date and title of the publication as well as the name and address of the promulgating agency are listed in Chapter ~~44~~.*

Unless specified otherwise in this code, reference to the term "International Residential Code" shall be changed to "residential code"; reference to "International Fire Code" shall be changed to "fire prevention code"; and reference in design and construction provisions to "one-and two-family dwellings" shall be changed to "one-, two-, and three-family dwellings."

Because the "International Code Council" has placed design and construction information throughout its model code documents, including into the fire prevention code, any referenced code requirements relating to the design, construction, alteration, movement, enlargement, replacement, repair, equipment,

use and occupancy, location, removal, and demolition of every building or structure within the scope of this code, shall be enforced by the residential building official.

Where differences occur between provisions of this code and referenced standards listed in Chapter 44, the provisions of this code shall apply.

102.6 Partial invalidity. *In the event any part or provision of this code is held to be illegal or void, this shall not have the effect of making void or illegal any of the other parts or provisions thereof, and it shall be presumed that this code would have been adopted without such illegal or invalid parts or provisions.*

102.7 Existing structures. *The provisions of section 113 shall control the alteration, repair, addition, maintenance, and change of occupancy of any existing structure.*

The occupancy of any structure currently existing on the date of adoption of this code shall be permitted to continue without change provided there are no orders of the residential building official pending, no evidence of fraud, or no serious safety or sanitation hazard. When requested, such approvals shall be in the form of a "Certificate of Occupancy for an Existing Building" in accordance with section 111.

Buildings constructed in accordance with plans which have been approved prior to the effective date of this code are existing buildings.

102.8 Non-required work. *Any component, building element, equipment, system or portion thereof not required by this code shall be permitted to be installed provided that it is constructed or installed in accordance with this code to the extent of the installation.*

> ***102.8.1 Fire protection systems****. Non-required fire protection systems shall be installed in accordance with Chapter 29 to the extent of the intended installation.*
>
> ***102.8.2 Elevators and lifts.*** *When a non-required elevator is intended to be installed, it shall be designed and installed in accordance with the residential elevator provisions in Part 5.3 of the ANSI A17.1. Non-required platform (wheelchair) lifts shall be designed and installed in accordance with ASME*

A18.1.

102.9 Temporary structures. *The residential building official is authorized to issue approvals for temporary structures. Such approvals shall be in the form of a "Certificate of Occupancy for a Temporary Building" in accordance with section 111.1.5. This section does not apply to time-limited occupancies in existing structures. See section 111.1.4 for time-limited occupancies.*

102.9.1 Conformance. *Temporary structures shall conform to the structural strength, fire safety, means of egress, accessibility, light, ventilation and sanitary requirements of this code as necessary to ensure the public health, safety and general welfare.*

102.9.2 Termination of approval. *The residential building official is authorized to terminate approval for a temporary structure and to order the temporary structure to be discontinued if conditions of the approval have been violated or the structure or use poses an immediate hazard to the public or occupants of the structure.*

102.10 Work exempt from approval. *Approval shall not be required for the following:*

Building:

1. *One-story detached accessory structures used as tool and storage sheds, playhouses and similar uses, provided the floor area does not exceed two hundred square feet (11.15 m^2) and playground structures.*

2. *Fences not over six feet (1829 mm) high.*

3. *Retaining walls which are not over four feet (1219 mm) in height measured from the bottom of the footing to the top of the wall, unless supporting a surcharge.*

4. *Water tanks supported directly upon grade if the capacity does not exceed five thousand gallons (18 927 L) and the ratio of height to diameter or width does not exceed two to one.*

5. *Sidewalks and driveways not more than thirty inches (762 mm) above grade and not over any basement or story below and which are not part of an accessible route.*

6. *Painting, papering, tiling, carpeting, cabinets, counter tops and similar finish work.*

7. *Swings and other playground equipment accessory to a one, two, or three-family dwelling.*

8. *Window awnings supported by an exterior wall which do not project more than fifty-four inches (1372 mm) from the exterior wall and do not require additional support.*

9. *Decks not exceeding 200 square feet (18.58 m^2)in area, that are not more than 30 inches (762mm) above grade at any point, are not attached to a dwelling, and do not serve the exit door required by section 311.2.*

10. *Above-ground storage tanks as defined in rule 4101:8-2-01 of the Administrative Code and the associated tank foundations.*

11. *<u>Battery operated smoke or carbon monoxide alarms installed in existing buildings where no construction is taking place.</u>*

Electrical:

1. *Listed cord-and-plug connected temporary decorative lighting.*
2. *Reinstallation of attachment plug receptacles but not the outlets thereof.*
3. *Replacement of branch circuit overcurrent devices of the required capacity and type in the same location.*
4. *Electrical wiring, devices, appliances, apparatus, or equipment operating at less than 25 volts and not capable of supplying more than 50 watts of energy.*
5. *Repairs and Maintenance: Approval shall not be required for minor repair work, including the replacement of lamps or the connection of approved portable electrical equipment to approved permanently installed receptacles.*

6. *Electrical wiring equipment not connected to building services equipment in and adjacent to natural or artificially made bodies of water as defined in Article 682 of NFPA 70 as referenced in Chapter 44.*

Gas:

1. *Portable heating, cooking, or clothes drying appliances;*

2. *Replacement of any minor part that does not alter approval of equipment or make such equipment unsafe.*

3. *Portable fuel cell appliances that are not connected to a fixed piping system and are not interconnected to a power grid.*

4. *Gas distribution piping owned and maintained by public or municipal utilities and located upstream of the point of delivery.*

Mechanical:

1. *Portable heating appliances;*

2. *Portable ventilation equipment;*

3. *Portable cooling units;*

4. *Steam, hot or chilled water piping within any heating or cooling equipment regulated by this code.*

5. *Replacement of any ~~minor~~ part that does not alter approval of equipment or make such equipment unsafe.*

6. *Portable evaporative cooler.*

7. *Self-contained refrigeration systems containing ten pounds (4.54 kg) or less of refrigerant or that are actuated by motors of one horsepower (746 W) or less.*

8. *Portable fuel cell appliances that are not connected to a fixed piping system and are not interconnected to a power grid.*

9. *Heating and cooling distribution piping owned and maintained by public or municipal utilities.*

Plumbing:

1. *The repair of leaks in drains, water, soil, waste or vent pipe; provided, however, that if any concealed trap, drain-pipe, water, soil, waste or vent pipe becomes defective and it becomes necessary to remove and replace the same with new material, such work shall be considered as new work and an approval shall be obtained and inspection made as provided in this code.*

2. *The clearance of stoppages or the repair of leaks in pipes, valves or fixtures, and the removal and reinstallation of water closets, provided such repairs do not involve or require the replacement of more than one fixture or rearrangement of valves, pipes or fixtures.*

102.10.1 Emergency repairs. *Where equipment replacements and repairs must be performed in an emergency situation, an application for approval shall be submitted within the next working business day to the building official.*

102.10.2 Minor repairs. *Minor repairs to structures may be to residential structures made without application or notice to the residential building official. Such repairs shall not include the cutting away of any wall, partition or portion thereof, the removal or cutting of any structural beam or load bearing support, or the removal or change of any required means of egress, or rearrangement of parts of a structure affecting the egress requirements; nor shall ordinary repairs include addition to, alteration of, replacement or relocation of any standpipe, water supply, sewer, drainage, drain leader, gas, soil, waste, vent or similar piping, electric wiring or mechanical or other work affecting public health or general safety.*

102.11 Building department jurisdictional limitations. *A municipal, township, or county residential building department that has been certified by the board of building standards, pursuant to section 103.2, shall enforce provisions of the rules of the board and of Chapters 3781. and 3791. of the Revised Code, relating to construction, arrangement, and the erection of residential buildings or parts thereof as defined in the rules of the board in accordance with the certification except as follows:*

1. ***Fire.*** *The fire chief of municipal corporations or townships, having fire departments, shall enforce all provisions of the rules of the board relating to fire prevention.*

2. ***Health.*** *The department of health, the boards of health of city or general health districts, or the residential departments of building inspection of municipal corporations, townships, or counties shall enforce such provisions relating to sanitary construction.*

3. ***Sewerage and drainage system.*** *In accordance with Section 3781.03 of the Revised Code, the department of the city engineer, in cities having such departments, the boards of health of health districts, or the sewer purveyor, as appropriate, shall have complete supervision and regulation of the entire sewerage and drainage system of the jurisdiction, including the building sewer and all laterals draining into the street sewers. Such department or agency shall have control and supervision of the installation and construction of all drains and sewers that become a part of the sewerage system of the jurisdiction and shall issue all the necessary permits and licenses for the construction and installation of all building sewers and of all other lateral drains that empty into the main sewers. Such department or agency shall keep a permanent record of the installation and location of every drain and sewerage system of the city.*

4. ***Enforcement.*** *This section does not exempt any officer or department from the obligation of enforcing any provision of the rules of the board.*

5. ***State Projects****. Certification does not confer any jurisdiction to a certified building department to:*

   5.1 The construction of buildings by the state of Ohio or on land owned by the state of Ohio including, but is not limited to, its agencies, authorities, boards, commissions, administrative departments, instrumentalities, community or technical college districts, but does not include other political subdivisions.

   Exception: *Local school district building projects funded by the Ohio school facilities commission in accordance with Chapter 3318. of the*

Revised Code where the local certified building department is authorized by the board to regulate construction of school facilities.

5.2 Park districts created pursuant to Chapter 1545. of the Revised Code. A certified municipal, township, or county building department may exercise enforcement authority, accept and approve plans and specifications, and make inspections for a park district created pursuant to Chapter 1545. of the Revised Code upon the approval, by resolution, of the board of park commissioners of the park district requesting the department to exercise that authority and conduct those activities.

***Note**: The lands owned by Miami university in the city of Oxford and Oxford township in Butler County and leased to private individuals or corporations under the land rent provisions of the Act of February 17, 1809, as set forth at 7 Ohio laws 184, are subject to local certified building department jurisdiction and are exempt from these provisions.*

SECTION 103
CERTIFIED RESIDENTIAL BUILDING DEPARTMENTS, PERSONNEL, AND APPEALS BOARDS

Refer to division 4101:7 of the Administrative Code for existing relocated building department, building department personnel, and boards of building appeals certification requirements.

SECTION 104
DUTIES AND RESPONSIBILITIES

***104.1 General.** Personnel of residential building departments that have been certified by the board of building standards, pursuant to rule 4101:7-3-01 of the Administrative Code, shall be responsible for performing the duties described in this section.*

***104.2 Residential building department personnel duties and responsibilities.** Municipal, township, or county residential building departments certified by the board shall have personnel qualified to perform the enforcement duties and responsibilities described in this section.*

104.2.1 Residential building official. *The residential building official is responsible for the enforcement of the rules of the board and of Chapters 3781. and 3791. of the Revised Code relating to the construction, arrangement, and the erection of residential buildings or parts thereof and may perform duties outlined in this section and in sections 104.2.2.1 and 104.2.3.1 below. All residential building officials shall conduct themselves in a professional, courteous, impartial, responsive, and cooperative manner. Residential building officials shall be responsible to assure that a system is in place to track and audit all projects, to assure that all residential building department personnel perform their duties in accordance with this section, and for the overall administration of a residential building department as follows:*

104.2.1.1 Applications and plan approvals *The residential building official shall receive applications, examine or cause the submitted construction documents to be examined, ascertain by such examinations whether the construction indicated and described is in accordance with the requirements of this code, and shall issue plan approvals for the construction, erection, alteration, demolition, and moving of buildings and structures.*

104.2.1.2 Orders. *The residential building official shall issue all orders in accordance with section 109 to ensure compliance with this code.*

104.2.1.3 Inspections. *If the plans for the erection, construction, repair, alteration, relocating, or equipment of a building are subject to inspection by the residential building official, under section 108, the residential building official shall make such inspections as the building official is authorized to make or shall cause to be made such inspections, investigations, and determinations as are necessary to determine whether or not the work which has been performed and the installations which have been made are in conformity with the approved construction documents. <u>The residential building official shall identify any special conditions that would affect the timing of inspections and schedule inspections times mutually agreed upon by the building official and the owner.</u>*

104.2.1.4 Residential department records. *The residential building official shall keep official records of applications received, certificate of plan approvals issued, notices and orders issued, certificates of occupancy, and other such records required by the rules of the board of building*

standards. Such information shall be retained in the official permanent record for each project. One set of approved residential construction documents shall be retained by the residential building official for a period of not less than one hundred eighty days from date of completion of the permitted work, or as required by the residential department's document retention regulations.

104.2.1.5 Department reports. *The residential building official shall be responsible for the submission of reports and any requested special information to the board of building standards as required in section 103.2.6. Failure to submit these reports in a timely manner as required by rule or by special request or inquiry of the board of building standards may be grounds for board action as described in ~~section 103.3.10~~ paragraph (F)(7) of rule 4101:7-3-01 of the Administrative Code.*

104.2.2 Residential plans examiners. *A residential plans examiner is responsible for the examination of construction documents in accordance with section 107, within the limits of their certification, to determine compliance with the rules of the board and may perform duties outlined in this section and in section 104.2.3.1 below. All residential plan examiners shall effectively communicate the results of their plan review to the owner or the owner's representative and the residential building official. A residential plans examiner shall conduct themselves in a professional, courteous, impartial, responsive, and cooperative manner.*

104.2.2.1 Residential plans examiner. *A residential plans examiner is responsible for the examination of all types of residential construction documents to determine compliance with the rules of the board.*

104.2.2.1.1 Residential plans examiner trainee. *A residential plans examiner trainee is responsible for the examination of all types of residential construction documents to determine compliance with the rules of the board under the direct supervision of ~~an individual holding a residential plans examiner certification~~ the trainee supervisor as required in paragraph (F)(5)(b) of rule 4101:7-3-01 of the Administrative Code.*

104.2.2.1.2 Electrical plans examiner. *An electrical plans examiner is responsible for the examination of construction documents related to*

electrical systems to determine compliance with the rules of the board.

If the department does not have in its employ or under contract persons holding the electrical plans examiner certification, then the examination of the construction documents for compliance with the electrical provisions of the code shall be done by the residential plans examiner.

104.2.3 Residential inspectors. *A residential inspector is responsible for performing inspections and determining that work, for which they are certified to make inspections, is performed in compliance with the approved residential construction documents. All residential inspectors shall inspect the work to the extent of the approval given when residential construction documents were approved by the residential building official and for which the inspection was requested. All residential inspectors shall effectively communicate the results of their inspections as required by section 108, and shall conduct themselves in a professional, courteous, impartial, responsive, and cooperative manner.*

104.2.3.1 Residential building inspector. *A residential building inspector is responsible to determine compliance with the approved residential construction documents in accordance with section 108.*

A residential building inspector trainee is designated to determine compliance with approved residential construction documents, in accordance with section 108, under the direct supervision of an individual holding a residential building inspector certification.

104.2.3.2 Residential plumbing inspector. *A residential plumbing inspector is responsible to determine plumbing system compliance with approved residential construction documents in accordance with section 108.*

A residential plumbing inspector trainee is designated to determine plumbing system compliance with approved residential construction documents, in accordance with section 108, under the direct supervision of an individual holding a residential plumbing inspector certification.

104.2.3.3 Electrical safety inspector. *An electrical safety inspector is responsible to determine electrical systems compliance with approved construction documents in accordance with section 108.*

An electrical safety inspector trainee is designated to determine electrical systems compliance with approved construction documents, in accordance with section 108, under the direct supervision of an individual holding an electrical safety inspector certification.

104.2.3.4 Elective inspectors. *Residential building departments may elect to employ inspectors designated as responsible for making inspections to determine that work is performed in compliance with approved construction documents certified as follows:*

104.2.3.4.1 Residential mechanical inspector. *A residential mechanical inspector is responsible to determine compliance with the approved residential construction documents for heating, ventilating and air conditioning (HVAC) systems, and the associated refrigeration, fuel gas, and heating piping systems in accordance with section 108.*

If the residential department does not have in its employ or under contract persons holding the residential mechanical inspector certification, then the enforcement of the mechanical provisions shall be done by the residential building inspector;

A residential mechanical inspector trainee is designated to determine compliance with the approved residential construction documents for heating, ventilating and air conditioning (HVAC) systems, and the associated refrigeration, fuel gas, and heating piping systems, in accordance with section 108, under the direct supervision of an individual holding a residential mechanical inspector certification.

104.2.4 Liability. *Liability of certified residential building department personnel for any tortious act will be determined by Ohio courts to the applicable provisions of Chapter 2744. of the Revised Code.*

104.3 Violation of duties. *Any person affected by the improper actions of any residential building department, residential building official, residential plans examiner, residential inspector, or fire protection system designer certified by the board of building standards may file a written complaint with the board. Complaints will be processed by the board in accordance with the procedures*

outlined in the applicable certification rule found in division 4101:7 of the Administrative Code.

SECTION 105
APPROVALS

105.1 Approvals required. *Any owner or authorized agent who intends to construct, enlarge, alter, repair, move, or change the occupancy of a residential building or structure, or portion thereof, or to erect, install, enlarge, alter, repair, remove, convert or replace any electrical, gas, mechanical, plumbing system, other residential building service equipment, or piping system the installation of which is regulated by this code, or to cause any such work to be done, shall first make application to the residential building official of a certified residential building department and obtain the required approval.*

105.1.1 Nonconformance approval. *When residential construction documents are submitted which do not conform with the requirements of the rules of the board, such documents may be approved by the residential building official provided such nonconformance is not considered to result in a serious hazard and the owner or owner's representative subsequently submits revised residential construction documents showing evidence of compliance with the applicable provisions of the rules of the board. In the event such residential construction documents are not received within thirty days, the residential building official shall issue an adjudication order revoking the plan approval.*

105.1.2 Conditional approval. *When residential construction documents are submitted which cannot be approved under the other provisions of this rule, the residential building official, may at the request of the owner or owner's representative, issue a conditional plan approval when an objection to any portion of the residential construction documents results from conflicting interpretations of the code, or compliance requires only minor modifications to the building design or construction. No conditional approval shall be issued where the objection is to the application of specific technical requirements of the code or correction of the objection would cause extensive changes in the building design or construction. A conditional approval is a conditional license to proceed with construction or materials up to the point where construction or materials objected to by the agency are to be incorporated into the building. The conditions objected to shall be in writing from the residential building*

official which shall be an adjudication order denying the issuance of a license and may be appealed in accordance with section 3781.19 of the Revised Code.

In the absence of fraud or a serious safety or sanitation hazard, all items previously examined shall be conclusively presumed to comply with Chapters 3781. and 3791. of the Revised Code and the rules of the board. Reexamination of the residential construction documents shall be limited to those items in the adjudication order. A conditional plan approval is not a phased plan approval.

105.1.3 Previous approvals. *This code shall not require changes in the residential construction documents, construction or designated occupancy of a structure for which a lawful approval has previously been issued or otherwise lawfully authorized, and the construction of which has been pursued in good faith within one year of the approval of residential construction documents. One extension shall be granted for an additional year if requested by the owner at least ten days in advance of the expiration of the approval and upon payment of any fee not to exceed one hundred dollars.*

If, after the start of construction, work is delayed or suspended for more than six months, the approval is invalid. Two extensions shall be granted for six months if requested by the owner at least ten days in advance of the expiration of the approval and upon payment of any fee for each extension not to exceed one hundred dollars.

105.1.4 Phased approval. *The residential building official shall issue an approval for the residential construction of foundations or any other part of a building, structure, or building service equipment before the residential construction documents for the whole building, structure or building service equipment have been submitted, provided that adequate information and detailed statements have been filed complying with applicable requirements of this code. The holder of such approval for the foundation or other parts of a building or structure shall proceed at the holder's own risk with the building operation and without assurance that an approval for the entire structure will be granted. Such approvals shall be issued for various stages in the sequence of construction provided that all information and data required by the code for that portion of the building or structure has been submitted. The holder of a phased plan approval may proceed only to the point for which approval has been given.*

105.2 Validity of approval. *The construction, erection, and alteration of a building, and any addition thereto, and the equipment and maintenance thereof, shall conform to required plans which have been approved by the residential building official, except for minor deviations which do not involve a violation of the rules of the board. In the absence of fraud or a serious safety or sanitation hazard, any residential structure built in accordance with approved plans shall be conclusively presumed to comply with Chapters 3781. and 3791. of the Revised Code and the rules of the board.*

> ***Exception:*** *Industrialized units shall be constructed to conform to the plans approved by the board.*

105.3 Expiration. *The approval of plans or drawings and specifications or data in accordance with this rule is invalid if construction, erection, alteration, or other work upon the building has not commenced within twelve months of the approval of the residential construction documents.*

One extension shall be granted for an additional twelve-month period if requested by the owner at least ten days in advance of the expiration of the approval and upon payment of a fee not to exceed one hundred dollars.

105.4 Extension. *If, in the course of construction, work is delayed or suspended for more than six months, the approval of residential construction documents is invalid. Two extensions shall be granted for six months each if requested by the owner at least ten days in advance of the expiration of the approval and upon payment of a fee for each extension of not more than one hundred dollars.*

105.5 Certificate of plan approval. *After residential construction documents have been approved in accordance with section 107, the residential building official shall furnish the owner/applicant a certificate of plan approval.*

> ***105.5.1 Content.*** *The form of the certificate shall be as prescribed by the residential building official and shall show the serial number of the certificate, the address at which the building or equipment under consideration is or is to be located, the name and address of the owner, the signature of the residential building official who issued the certificate, and such other information as is necessary to facilitate and ensure the proper enforcement of the rules of the board.*

105.5.2 Duplicate issued upon request. *Upon application by the owner, the residential building official shall issue a duplicate certificate of plan approval to replace a lost or destroyed original.*

SECTION 106
CONSTRUCTION DOCUMENTS

106.1 Submittal documents. *Residential construction documents and other data shall be submitted in two or more sets with each application for an approval. Before beginning the construction of any building for which construction documents are required under section 105, the owner or the owner's representative shall submit construction documents to the residential building official of a certified residential building department for approval. When construction documents have been found to be in compliance with the rules of the board of building standards in accordance with section 107 by a certified residential building department, that determination of compliance shall be deemed sufficient to obtain approval for construction pursuant to section 105.2 and the residential building official shall issue the certificate of plan approval. Construction documents for the installation of industrialized units shall be submitted to the residential building official for approval in accordance with the provisions of section 106.1.4.*

106.1.1 Professionally prepared construction documents*. Construction documents which have been prepared by a registered design professional who prepared the same as conforming to the requirements of the rules of the board pertaining to design loads, stresses, strength, and stability, or other requirements involving technical analysis, need be examined only to the extent necessary to determine conformity of such residential construction documents with other requirements of this code.*

106.1.2 Residential fire protection system construction documents. *Residential construction documents for fire protection systems authorized to be submitted by individuals certified pursuant to Chapter 4101:2-87 of the Administrative Code shall:*

1. *When submitted under the signature of an individual certified under section 3781.105 of the Revised Code, be processed in the same manner as construction documents submitted under the signature of a registered design professional. Any statistical data, reports, explanations, plan*

description, or information that would not also be required for a similar submission by a registered design professional need not be submitted by a certified designer.

2. *If certified by a registered design professional or individual certified under section 3781.105 of the Revised Code as conforming to requirements of the rules of the board pertaining to design loads, stresses, strength, stability, or other requirements involving technical analysis, be examined by the building department official only to the extent necessary to determine conformity of such construction documents with other requirements of this Code.*

106.1.3 Information on construction documents. *Residential construction documents shall be dimensioned and drawn upon suitable material. Electronic media documents are permitted to be submitted when approved by the residential building official. Construction documents shall be coordinated and of sufficient clarity to indicate the location, nature and extent of the work proposed and show in detail that it will conform to the provisions of this code. Construction documents, adequate for the scope of the project, shall include information necessary to determine compliance with this code.*

1. ***Index.*** *An index of drawings located on the first sheet;*

2. ***Site plan.*** *A site plan showing a north orientation arrow, the size and location of new residential construction and all existing structures on the site, all property and interior lot line locations with setback and side yard dimensions and distances from buildings to lot lines, the locations of the nearest streets, the established street grades, the locations, types and sizes of all utility lines, the location of any fences, and the elevations of all proposed finished grades; and it shall be drawn in accordance with an accurate boundary line survey. In the case of demolition, the site plan shall show construction to be demolished and the location and size of existing structures and construction that are to remain on the site or plot. The residential building official is authorized to waive or modify the requirement for a site plan when the application for approval is for alteration or repair or when otherwise warranted.*

   2.1 ***Residential buildings or structures located in flood hazard areas.*** *Construction documents submitted for residential buildings or*

structures located in communities with identified flood hazard areas, pursuant to section 1612, shall include the current FEMA "Flood Hazard Boundary Map" (FHBM), "Flood Insurance Rate Map" (FIRM) or "Flood Boundary Floodway Map" (FBFM) for the project location. The required site plan shall include building elevations using the same datum as the related flood hazard map. The owner shall be responsible for the compliance with local flood damage prevention regulations for additional critical elevation information for the project site. The elevation certification and dry flood proofing certification, when required for buildings or structures located in communities with identified flood hazard areas, shall be submitted to the residential building official.

2.2 ***Site accessibility plan.*** *For structures of four or more dwellings, information in plan view and details shall be submitted indicating compliance with the accessibility provisions of this code for the exterior of the building in addition to any accessible features of the interior. When applicable, the plans shall include: the exterior accessible route between all facilities required to be connected; ramp locations and elevations along the exterior accessible route; number of and details for the required accessible van and car parking spaces and passenger loading areas; location and detail of required accessibility signage; grade/topographic elevations before and after proposed grading when site impracticality is intended to be applied.*

3. ***Floor plans.*** *Complete floor plans, including plans of full or partial basements and full or partial attics. Floor plans must show all relevant information such as door swings, stairs and ramps, windows, shafts, all portions of the means of egress, etc., and shall be sufficiently dimensioned to describe all relevant space sizes. Wall materials shall be described by cross-hatching (with explanatory key), by notation, or by other clearly understandable method. Spaces must be identified by how each space is intended to be used.*

4. ***Exterior wall envelope.*** *The exterior envelope shall be described in sufficient detail to determine compliance with this code and the referenced standards. Details or elevations shall be provided which describe floor to floor dimensions, flashing, intersections with*

dissimilar materials, corners, end details, control joints, intersections at roof, eaves, or parapets, means of drainage, water-resistive membrane, details around openings, location and type of vapor retarders, window and door "U"-values, and insulation location and "R"-values. The supporting documentation shall fully describe the exterior wall system, which was tested, where applicable, as well as the test procedure used.

5. ***Sections.*** *Cross sections, wall sections, details including typical connections as required to fully describe the residential building construction showing wall, ceiling, floor and roof materials. Residential construction documents shall describe the exterior wall envelope in sufficient detail to determine compliance with this code.*

6. ***Structure.*** *Complete structural description of the residential building including size and location of all structural elements used in the design of the residential building and other data as required to fully describe the structural system.*

7. ***Ratings.*** *The fire-resistance ratings of all structural elements as required by this code, data substantiating all required fire-resistance ratings including details showing how penetrations will be made for electrical, mechanical, plumbing, and communication conduits, pipes, and systems, and the materials and methods for maintaining the required structural integrity, fire-resistance rating, and firestopping.*

8. ***System descriptions.*** *Description of the mechanical, plumbing and electrical systems, including: materials; location and type of fixtures and equipment; materials, and sizes of all ductwork; location and type of heating, ventilation, air conditioning and other mechanical equipment; and all lighting and power equipment.*

9. ***Accessibility provisions.*** *When non-required accessibility components are intended to be installed, indicate whether the project will comply with Type A, Type B, Type C (Visitable), or Accessible units in ICC/ANSI A117.1 listed in Chapter 44 as pursuant to Section 320.1.*

10. ***Additional information.*** *Additional graphic or text information as may be reasonably required by the residential building official to allow the review of special or extraordinary construction methods or equipment.*

106.1.3.1 Fire protection system drawings. *Construction documents for the fire protection system(s) shall be submitted to indicate conformance with this code and shall be approved prior to the start of system installation.*

106.1.3.2 Manufacturer's installation instructions. *Manufacturer's installation instructions, as required by this code, shall be available on the job site at the time of inspection.*

106.1.4 Industrialized units. *When construction includes the use of industrialized units approved by the board, documentation shall be provided to the building official describing how they are to be used. Before these items are installed or used, the following shall be submitted:*

1. A copy of the construction documents approved by the board; and

2. Details pertaining to on-site interconnection of modules or assemblies.

Exception*: When construction includes the use of industrialized units for one-, two-, and three- family dwellings and their accessory structures, the documents shall be provided to the residential building official. If no residential department is certified in a jurisdiction, construction documents for one-, two-, or three-family dwellings comprised of industrialized units are not required to be submitted for approval.*

106.1.4.1. Definitions.

Closed construction. *An assembly of materials or products manufactured in such a manner that its structural, plumbing, electrical, environmental control, or fire protection elements or components are concealed and are not readily accessible for inspection at the site of its erection, without disassembly, damage, or destruction. Closed construction includes assemblies where only one of the components is not accessible for inspection. (For example, an accessory structure where all the electrical conductors and components are exposed for inspection and its roof and wall panels have exposed structural members but the floor panel structural*

members are not exposed.)

Industrialized units. *Industrialized units are prefabricated components comprised of closed construction manufactured at a location remote from the site of intended use and transported to a building site for its subsequent use. Industrialized units are not restricted to housing for one-, two-, and three-family dwellings, but include all prefabricated forms of building elements and assembled construction units, intended for both structural and service equipment purposes in all buildings of all groups. Prefabricated shop assemblies may be shipped in structurally complete units ready for installation in the building structure or in knock-down and packaged form for assembly at the site.*

106.1.4.2 General terms. *Such terms as heart modules or cores, modules, modulars, service cores, prefabs, sectional or sectionalized, panels or panelized construction, and specific terms including "prefabricated-subassembly, -building, -unit, -unit service equipment" shall be considered industrialized units. They may be self-sufficient or interdependent as a unit or group of units and used together or incorporated with standard construction methods to form a completed structural entity.*

For a complete description of the Ohio industrialized unit program refer to OBC Section 113.

106.2 Evidence of responsibility. *Required residential construction documents, when submitted for review as required under section 107, shall bear the identification of the person primarily responsible for their preparation.*

106.3 Amended construction documents. *If substantive changes to the residential building are contemplated after first document submission, or during construction, those changes must be submitted to the residential building official for review and approval prior to those changes being executed. The residential building official may waive this requirement in the instance of an emergency repair, or similar instance.*

106.4 Alternative materials and methods of construction and equipment. *For approval of a device, material or assembly that does not conform to the performance requirements in this code, section 114 shall apply.*

106.5 Alternative engineered design. *The design, documentation, inspection, testing and approval of an alternative engineered system shall comply with sections 106.5.1 to 106.5.3.*

106.5.1 Design criteria. *An alternative engineered design shall conform to the intent of the provisions of this code and shall provide an equivalent level of quality, strength, effectiveness, fire resistance, durability and safety. Materials, equipment or components shall be designed and installed in accordance with the manufacturer's installation instructions.*

106.5.2 Submittal. *A registered design professional shall indicate on the application that the system is an alternative engineered design. The approval and permanent approval records shall indicate that an alternative engineered design was part of the approved installation. Where special conditions exist, the residential building official is authorized to require additional construction documents to be prepared by a registered design professional.*

106.5.3 Technical data. *The registered design professional shall submit sufficient technical data to substantiate the proposed alternative engineered design and to prove that the performance meets the intent of this code.*

Exception: *Approval of alternative materials, products, assemblies and methods of construction in accordance with Section 114.3.2.*

SECTION 107
PLAN APPROVAL PROCESS

107.1 Plan review required. *Where the rules of the board are applicable under section 101.2, before a residential building or addition to a residential building is constructed or erected, and before a residential building is altered or relocated, or residential building equipment is installed, or a resubmission of construction documents is required or received, residential construction documents relating to the work and equipment under consideration shall be prepared in conformity with section 106 and be submitted to the residential building department for examination and approval.*

107.2 Application for plan approval. *To obtain a plan approval, the owner or the owner's representative shall first file an application in writing on a form furnished by the residential building department for that purpose. Such application shall:*

1. *Identify and describe the work to be covered for which application is made for approval.*

2. *Describe the land on which the proposed work is to be done, street address or similar description that will readily identify and locate the proposed building or work.*

3. *Be accompanied by residential construction documents and other information as required in section 106.1.*

4. *Be signed by the owner, or the owner's authorized agent.*

5. *Give such other data and information as required by the residential building official.*

6. *Identify and clearly indicate whether the project or portion of a project intends to utilize an industrialized unit.*

7. *Identify and clearly indicate whether the project or portion of a project intends to utilize an assembly of individually listed or labeled products.*

107.2.1 Time limitation of application. *The approval of construction documents under this section is a "license" and the failure to approve such construction documents as submitted within thirty days after filing or the disapproval of such construction documents is an "adjudication order denying the issuance of a license" requiring the opportunity for an "adjudication hearing" as provided by sections 119.07 to 119.13 of the Revised Code and as modified by sections 3781.031 and 3781.19 of the Revised Code. In accordance with section 109, an adjudication order denying the issuance of a license shall specify the reasons for such denial.*

If residential construction documents have been reviewed for compliance with the rules of the board, an adjudication order has been issued to the owner and the owner's representative, and the owner has neither exercised the right to appeal pursuant to section 110 nor resubmitted corrected documents, the application is invalid six months from the date of the issuance of the adjudication order.

107.3 Order of plan review. *Residential construction documents submitted for approval shall be examined for compliance with the rules of the board in the order received, unless otherwise consented to by the building owners affected by deferred examination.*

107.4 Review of plans. *When residential construction documents have been submitted to the residential building department for review and approval, the building official shall review as appropriate or shall cause the residential construction documents to be examined for compliance with the rules of the board by assigning the examination duty to an appropriately certified individual. The residential building official or plans examiner shall first determine whether the construction documents are adequate as required in section 106. <u>If adequate, the plans examiner(s) shall examine the construction documents to determine compliance with the rules of the board.</u>*

107.4.1 Inadequate construction documents. *If residential construction documents are determined to be incomplete or inadequate for examination, the residential plans examiner shall report the findings to the residential building official. The residential plans examiner shall examine the construction documents to the extent possible and identify what information from section 106 is missing and needed to complete the required examination. Upon receipt and review of the report, the residential building official shall proceed as required in section 107.6.*

107.4.2 Resubmitted documents. *If residential construction documents are resubmitted in response to an adjudication order, the review for compliance shall be limited to determining that the item of non-compliance, and any work affected, has been corrected and shall not be deemed to authorize another review of unmodified construction documents previously determined to comply.*

107.4.3 Sealed construction documents*. Residential construction documents, if prepared by an Ohio registered design professional to conform to the requirements of the rules of the board pertaining to design loads, stresses, strength, and stability, or other requirements involving technical analysis, need be examined only to the extent necessary to determine conformity of such construction documents with other requirements of the rules of the board.*

107.5 Plan review, compliance with rules of the board. *If the residential construction documents are determined to comply with the rules of the board, the*

residential plans examiner shall communicate the findings and recommend the conditions and type of approval to the residential building official.

107.5.1 Residential building official approval. *The residential building official shall evaluate the residential plans examiner's recommendations. When the residential construction documents have been determined to conform to the applicable provisions of the rules of the board, the residential building official shall endorse or stamp such plans as approved and issue the certificate of plan approval in accordance with section 105.5.*

107.5.2 Posting. *The certificate of plan approval shall be posted in a conspicuous location on the site. The owner and the contractor shall preserve and keep the certificate posted until the final inspections have been completed.*

107.6 Plan review, items of noncompliance. *When the residential construction documents are examined and items of noncompliance with the rules of the board are found, the residential building official shall proceed as required in either section 107.6.1 or section 107.6.2.*

107.6.1 Communication process for items of non-compliance.

1. *Item(s) of non-compliance shall be communicated to the owner or the owner's representative and the following options shall be offered:*

   1.1 The owner will revise the construction documents and resubmit to the department.

   1.2 The items of noncompliance will not be brought into compliance and will be referred to the residential building official as indicated in item 4 below.

2. *The owner or the owner's representative shall indicate which option (item 1 above) will be exercised.*

3. *Notations of the communication shall be made on a plan review record. The notations shall include the residential plans examiner's name, the date of the communication with the owner or the owner's representative, the observed items of noncompliance, the code citation related to the item(s) of noncompliance, the action necessary to correct the item(s) of*

noncompliance, the option chosen by the owner or the owner's representative, the name of the person communicated with, and the estimated dates of compliance and resubmission, if applicable.

4. *If the owner or the owner's representative indicates that the work will not be brought into compliance with the rules of the board or requests an adjudication order, the residential plans examiner shall report to the building official in accordance with section 107.6.2.*

107.6.2 Residential building official determination of noncompliance. *The residential building official shall evaluate the results of the plans examination and render a final determination as to whether the items of non-compliance are to be communicated to the owner in the form of an adjudication order complying with section 109. The residential building official shall also determine whether any approvals are possible, and issue the appropriate approval as described in section 105.*

107.7 Approved residential construction document sets. *One set of approved residential construction documents shall be kept by the residential building official. The other set(s) shall be returned to the applicant, kept at the work site, along with manufacturers' installation instructions and product information, and shall be available for use by the residential inspectors.*

SECTION 108
INSPECTION PROCESS

108.1 General. *After residential construction documents have been approved, construction or work may proceed in accordance with the approved documents. Construction or work for which an approval is required shall be subject to inspection. It shall be the duty of the owner or the owner's duly authorized representative to notify the residential building department when work is ready for inspection. Access to and means for inspection of such work shall be provided for any inspections that are required by this code.*

It shall be the duty of the owner or the owner's authorized representative to cause the work to remain accessible and exposed for inspection purposes. Such construction or work shall remain accessible and exposed for inspection purposes until the work has been inspected to verify compliance with the approved

construction documents, but failure of the inspectors to inspect the work within four days, exclusive of Saturdays, Sundays, and legal holidays, after the work is ready for inspection, allows the work to proceed.

Subsequent work is allowed to proceed only to the point of the next required inspection.

108.2 Required inspections. *At the time that the certificate of plan approval is issued, the residential building official shall provide to the owner, or the owner's representative, a list of all required inspections for each project. The required inspection list shall be created from the applicable inspections set forth in sections 108.2.1 to 108.2.12. The residential building official, upon notification from the owner or the owner's agent that the work is ready for inspection, shall cause the inspections set forth in the required inspection list to be made by an appropriately certified residential inspector in accordance with the approved residential construction documents.*

108.2.1 Lot line markers required. *Before any work is started in the construction of a residential building or an addition to a residential building to which the rules of the board are applicable under section 101.2, all boundary lines shall be clearly marked at their intersections with permanent markers or with markers which are offset at a distance which is of record with the owner.*

108.2.2 Footing or foundation inspection. *Footing and foundation inspections shall be made after excavations for footings are complete and any required reinforcing steel is in place. For concrete foundations, any required forms shall be in place prior to inspection. Materials for the foundation shall be on the job, except where concrete is ready mixed in accordance with "ASTM C 94", the concrete need not be on the job.*

108.2.3 Concrete slab and under-floor inspection. *Concrete slab and under-floor inspections shall be made after in-slab and under-floor reinforcing steel and building service equipment, conduit, insulation, vapor retarder, piping accessories and other ancillary equipment items are in place, but before any concrete is placed or floor sheathing installed, including the subfloor.*

108.2.4 Lowest floor elevation. *The elevation certification required in section 322 shall be submitted to the residential building official.*

108.2.5 Frame inspection. *Framing inspections shall be made after the roof deck or sheathing, all framing, fire blocking and bracing are in place and pipes, chimneys and vents to be concealed are complete and the rough electrical, plumbing, heating wires, pipes and ducts are approved.*

108.2.6 Lath or gypsum board inspection. *Lath and gypsum board inspections shall be made after lathing and gypsum board, interior and exterior, is in place, but before any plastering is applied or before gypsum board joints and fasteners are taped and finished.*

Exception: *Gypsum board that is not part of a fire-resistive assembly or a shear assembly.*

108.2.7 Fire-resistant penetrations. *Protection of joints and penetrations in fire-resistance-rated assemblies shall not be concealed from view until inspected and approved.*

108.2.8 Energy efficiency inspections. *Inspections shall be made to determine compliance with Chapter 11 and shall include, but not be limited to, inspections for: envelope insulation "R" and "U" values, fenestration "U" value, duct system "R" value, infiltration air barriers, caulking/sealing of openings in envelope and ductwork, and "HVAC" and water heating equipment efficiency.*

108.2.9 Testing of residential building service equipment. *Inspections shall be made of all residential building services equipment to ensure that it has been installed in accordance with the approved construction documents, the equipment listings, and the manufacturer's installation instructions. Inspections shall include, but not be limited to, inspections for the following systems and their associated components: mechanical heating and ventilating systems, mechanical exhaust systems, plumbing systems, fire protection systems, and electrical systems.*

108.2.10 Other inspections. *In addition to the inspections specified above, the residential building official is authorized to cause to be made or require other inspections of any residential construction work to be made_to ascertain compliance with the provisions of this code.*

Where applications are submitted for projects of unusual magnitude of construction, the building official may require inspections or full-time project

representation by a registered design professional or inspection agency. This inspector/project representative shall keep daily records and submit reports as required by the building official.

Exception: *Where the building official requires full-time project inspection, the installation of a fire protection system may be inspected by a person certified under section 3781.105 of the Revised Code. The person shall be certified in the appropriate subfield of fire protection systems being inspected – automatic sprinkler, fire alarm, or special hazards systems design.*

108.2.11 Inspections, compliance with construction documents. *When an inspector from the department having jurisdiction finds that completed work is in accordance with the approved construction documents, the inspector shall communicate the findings to the owner's on-site representative, shall make a note of the satisfactory inspection on an on-site inspection record and in the inspector's log, and communicate the findings to the residential building official. The residential building official, after review of the findings, shall issue the certificate of occupancy in accordance with section 111.*

108.2.12 Industrialized unit inspections. *If the project will include the use of industrialized units approved by the board, the residential building official shall cause inspections to be made for on-site construction to complete the installation of the industrialized unit in conformance with the applicable provisions of the rules of the board. Such inspections shall include:*

1. *Connection to on-site construction, interconnection of modules, connection to utilities. The inspections and conducting of required tests shall not require the destruction or disassembly of any factory-constructed component authorized by the board.*

2. *Inspection of the unit for damage resulting from transportation, improper protection of exposed parts from inclement weather or other causes. Damage shall be repaired as required by the residential building official to comply with the applicable provisions of the rules of the board;*

3. *Inspection of the unit to determine if it is marked by an insignia furnished by the board; and*

4. *Inspect the unit to determine if the floor plan, exterior elevations, and exposed details are in conformance with the construction documents approved by the board.*

108.3 Inspection agencies. *The residential building official is authorized to accept reports of approved inspection agencies, provided such agencies are approved in accordance with the rules of the board of building standards.*

108.4 Right of entry. *The residential building official, or the residential building official's designee, is authorized to enter the structure or premises at reasonable times to inspect or to perform the duties imposed by this code, provided that credentials are presented to the occupant and that entry is requested and obtained. Where permission to enter has not been obtained, is denied, or the residential building official has probable cause to believe that there exists in a structure or upon a premises a condition which is a serious hazard, the residential building official shall proceed as required in section 109 and shall also have recourse to the remedies provided by law to secure entry.*

108.5 Inspections, compliance with residential construction documents. *When an individual certified to make inspections from the residential department having jurisdiction finds that completed work is in accordance with the approved residential construction documents, the certified individual shall communicate the findings to the owner's on-site representative, shall make a note of the satisfactory inspection on an on-site inspection record and in the residential inspector's log, and communicate their findings to the residential building official. The residential building official, after review of the findings, shall issue the certificate of occupancy in accordance with section 111.*

108.6 Inspections, observation of violations, unsafe conditions, or serious hazards. *When an individual certified to make inspections from the residential department having jurisdiction finds that any work in connection with the location, erection, construction, repair, alteration, moving, or equipment of a residential building is contrary to the approved residential construction documents for the same, the residential building inspector shall proceed as required in either section 108.6.1 or 108.7.*

108.6.1 Communication process for work contrary to approved construction documents.

1. *Communicate the nature of the differences to the owner or the owner's on-site representative and offer the following options*

   1.1 The owner will bring the item of noncompliance into compliance,

   1.2 The owner will revise the construction documents and resubmit to the residential department,

   1.3 The items of noncompliance will not be brought into compliance and will be referred to the residential building official as indicated in item 4 below.

2. *The owner or the owner's on-site representative shall indicate which option (item 1 above) will be exercised*

3. *Notations on the on-site inspection record and in the residential inspector's log shall be made. The notations shall include the name of the certified individual authorized to make the inspections, the date of the inspection, the type of inspection, the observed items of noncompliance, the option chosen by the owner or the owner's on-site representative, the name of the person communicated with, and the estimated dates of compliance and follow-up inspections, if applicable.*

4. *If the owner or the owner's on-site representative indicates that the work will not be brought into compliance with the approved residential construction documents, the individual certified to make inspections shall submit a report to the residential building official for the final determination of noncompliance in accordance with section 108.7.*

108.6.2 Observation of violations not shown on plans. *If an individual certified to make inspections, in the course of performing the assigned or requested inspections, observes a code violation that was either shown incorrectly or not adequately addressed or detailed in the approved residential construction documents, the certified individual shall communicate the finding to the residential building official so that the residential building official can make a determination of whether the code violation is of such significance to warrant communicating the finding to the owner or the owner's representative as a recommended change.*

108.6.3 Observation of unsafe conditions or serious hazards. *If an individual certified to make inspections, in the course of performing the assigned or requested inspections, observes an unsafe condition or a serious hazard, the certified individual shall communicate that condition to the owner or the owner's on-site representative and shall report the findings immediately to the residential building official so that the residential building official can make a final determination of whether the violation constitutes a serious hazard which requires the issuance of an adjudication order as required in section 109.*

108.6.4 Industrialized units, observations of noncompliance. *When an individual certified to make inspections from the residential department having jurisdiction finds that a residential industrialized unit has been constructed contrary to the residential construction documents approved by the board, the certified individual shall report the nonconformance to the residential building official. The residential building official shall notify the board of all violations of section 108.2.13. The board or its designee and the residential building official shall determine the corrective action to be taken before the residential building is approved to be occupied.*

108.7 Residential building official determination of noncompliance. *The residential building official shall evaluate any report of items of noncompliance and render a final determination as to whether the items of non-compliance are to be communicated to the owner in the form of an adjudication order complying with section 109. The residential building official shall also determine whether any approvals are possible.*

108.8 Acceptance, performance, and operational testing. *Acceptance, performance, and operational testing shall be conducted as required in the applicable code or referenced standard. Advanced notice of the test schedule shall be given to the building official. The residential building official may require that the tests be conducted in the presence of the building official or certified residential inspector. Testing and inspection records shall be made available to the residential building official or inspector, upon request, at all times during the fabrication of the systems and the erection of the building.*

108.8.1 New, altered, extended or repaired systems. *New systems and parts of existing systems, which have been altered, extended, renovated or repaired, shall be tested as prescribed herein to disclose leaks and defects.*

108.8.2 Apparatus, material and labor for tests. *Apparatus, material and labor required for testing a system or part thereof shall be furnished by the owner or the owner's representative. Required tests shall be conducted by and_at the expense of the owner or the owner's representative.*

108.8.3 Reinspection and testing. *Where any work or installation does not pass an initial test or inspection, the inspector shall proceed as outlined in section 108.6.*

Section 109
Orders, Violations, and Unsafe Buildings

109.1 Adjudication orders required. *When the residential building official denies any approval or takes action in response to findings of non-compliance, such action shall be initiated by issuing an adjudication order, prior to seeking any remedy, civil or criminal. Every adjudication order shall:*

1. *Clearly identify the section of law or rules violated;*

   1.1 Clearly identify, in a contrasting and obviously marked manner, all violations related to accessibility.

2. *Specifically indicate which detail, installation, site preparation, material, appliance, device, addition, alteration to structures, residential construction documents, assemblages or procedures are necessary to change to comply with the order;*

   2.1 When issued to stop work, the order shall also clearly indicate the specific work that is required to cease, when the work must cease and the conditions under which the cited work will be permitted to resume. The order to stop work shall be given to the owner of the property involved, to the owner's agent and the person doing the work.

3. *Include notice of the procedure for appeal and right to a hearing if requested within thirty days of the mailing of the order. The order shall also indicate that, at the hearing, the owner may be represented by counsel, present arguments or contentions orally or in writing, and present evidence and examine witnesses appearing for or against the owner;*

4. *Specify a reasonable period of time in which to bring the item(s) on the order into compliance;*

5. *Include the signature of the residential building official;*

6. *The order shall be sent by certified mail, return receipt requested, to the owner and any individual designated as a representative or agent by the owner in such matters.*

109.2 Response to orders. *The person receiving an order shall exercise their right to appeal within 30 days of the mailing of the order, comply with the order, or otherwise be released from the order by the residential building official.*

109.3 Prosecution and penalties. *When an owner fails to comply with section 109.2, the owner may be prosecuted and is subject to a fine of not more than five hundred dollars as provided for in section 3791.04 of the Revised Code.*

109.3.1 Unlawful continuance. *Failure to cease work after receipt of an order to stop work is hereby declared a public nuisance.*

109.4 Unsafe buildings. *Structures or existing equipment that are unsafe or unsanitary due to inadequate means of egress facilities, inadequate light and ventilation, or which constitute a fire hazard, or are otherwise dangerous to human life, shall be deemed a serious hazard. Where a residential building is found to be a serious hazard, such hazard shall be eliminated or the residential building shall be vacated, and where such residential building, when vacated, remains a serious hazard, it shall be razed.*

109.4.1 Orders, injunction proceedings. *Where the residential building official finds that a residential building is a serious hazard and the owner of such building fails, in the time specified in an order from the residential building official, to eliminate such hazard, or to vacate or raze the residential building, the residential building official shall proceed under section 3781.15 of the Revised Code.*

109.4.2 Restoration. *Where the residential structure or equipment is determined to be unsafe by the residential building official, it is permitted to be restored to a safe condition. To the extent that repairs, alterations or additions are intended to be made or a change of occupancy occurs during the restoration*

of the structure, such repairs, alterations, additions or change of occupancy shall comply with this chapter.

SECTION 110
APPEALS

110.1 Hearing and right of appeal, local board of building appeals. *In order to hear and decide appeals of orders, decisions, or determinations made by the residential building official relative to the application of this code, there shall be a local appeals process established within the certified jurisdiction. Adjudication hearings shall be in accordance with sections 119.09 to 119.13 of the Revised Code, as required by section 3781.031 of the Revised Code.*

SECTION 111
CERTIFICATE OF OCCUPANCY AND CERTIFICATE OF COMPLETION

111.1 Approval required to occupy. *No residential building or structure, in whole or in part, shall be used or occupied until the residential building official has issued an approval in the form of a certificate of occupancy or certificate of completion in compliance with this section.*

111.1.1 Certificate of occupancy. *The certificate of occupancy shall indicate the conditions under which the residential building shall be used. The building owner shall only use the structure in compliance with the certificate of occupancy and any stated conditions. The residential structure and all approved building service equipment shall be maintained in accordance with the approval.*
When a residential building or structure is entitled thereto (constructed according to the approved construction documents, final tests and inspections are completed, and no orders of the building official are outstanding, or as permitted in this section), the residential building official shall issue a certificate of occupancy in a timely manner.

~~111.1.1~~ 111.1.1.1 New residential buildings*. A residential building or structure erected shall not be used or occupied, in whole or in part, until the certificate of occupancy has been issued by the residential building official. Occupancy of spaces within a residential building which are unaffected by the work of work shall be allowed to continue if the residential*

building official determines the existing spaces can be occupied safely until the completion of the work.

~~111.1.2~~ ***<u>111.1.1.2</u>*** ***Residential building alterations or additions.*** *A residential building or structure enlarged, extended or altered, in whole or in part, shall not be occupied or used until a certificate of occupancy has been issued. Occupancy of spaces within a building which are unaffected by the work of alteration shall be allowed to continue if the residential building official determines the existing spaces can be occupied safely until the completion of the alteration.*

~~111.1.3~~ ***<u>111.1.1.3</u>*** ***Partial occupancy.*** *Upon the request of the owner or owner's representative, a residential building official shall issue a certificate of occupancy before the completion of the entire work, provided that the residential building official determines that the space can be safely occupied prior to full completion of the residential building, structure, or portion without endangering life or public welfare. The certificate shall indicate the extent of the areas approved for occupancy and any time limits for completion of the work.*

~~111.1.4~~ ***<u>111.1.1.4</u>*** ***Time-limited occupancy.*** *A residential building or structure hereafter changed in part from one occupancy to another for a limited time may receive a certificate of occupancy reflecting that time-limited occupancy provided:*

1. *There are no violations of law or orders of the residential building official pending;*

2. *It is established after inspection and investigation that the proposed use is not deemed to endanger public safety and welfare ~~safely~~;*

3. *The residential building official has approved the use for an alternative purpose on a temporary basis;*

4. *The residential building official has issued a certificate of occupancy indicating any special conditions under which the building or part of the residential building can be used for the alternative purpose within the time limit specified.*

~~111.1.5~~ ***111.1.1.5*** ***Temporary structures occupancy.*** *A residential building intended to be erected, placed and used for a period of time not to exceed one hundred eighty days that has been determined by the residential building official to be in compliance with section 102.9 shall be issued a "Certificate of Occupancy for Temporary Structures." The residential building official is authorized to grant extensions for demonstrated cause.*

111.1.2 Certificate of completion for alterations and repairs. *The certificate of completion for alterations and repairs shall indicate the conditions under which the building shall be used. The building owner shall only use the structure in accordance with the certificate of completion and any stated conditions. The structure and all approved building service equipment shall be maintained in accordance with the approval.*

When the work in a building or structure is entitled thereto, the building official shall issue a certificate of completion for the work provided there are not violations of the rules of the board or orders of the building official pending or as permitted in this section. Occupancy of spaces within a building which are unaffected by the work shall be allowed to continue if the building official determines the existing spaces can be occupied safely.

111.2 Existing residential buildings. *Upon written request from the owner of an existing residential building or structure, the residential building official shall issue a certificate of occupancy, provided there are not violations of law or orders of the residential building official pending, and it is established after inspection and investigation that the alleged occupancy of the residential building or structure has previously existed. This code shall not require the removal, alteration or abandonment of, or prevent the continuance of, the occupancy of a lawfully existing residential building or structure, unless such use is deemed to endanger public safety and welfare.*

111.3 Certificate issued. *The certificate shall certify compliance with the provisions of this code, Chapters 3781. and 3791. of the Revised Code, and the purpose for which the residential building or structure may be used in its several parts. The certificate of occupancy or certificate of completion shall contain the following:*

1. *The plan approval application number.*

2. *The name and address of the owner.*

3. *A description of that portion of the structure for which the certificate is issued.*

4. *The signature of all residential building officials having jurisdiction. When more than one residential building official has jurisdiction for a building (when the certification of the residential building department is limited for such systems as plumbing or piping systems) each shall sign the certificate of occupancy with an indication of the scope of their individual approvals.*

~~2.~~ *5. The edition of the residential code under which the plan approval was issued.*

~~3.~~ *6. When an automatic sprinkler system is provided, the type and description of the system shall be indicated.*

~~4.~~ *7. Any special stipulations and conditions of the plan approval including any variances granted to the requirements of this code.*

111.4 Validity of a certificate of occupancy or certificate of completion. *The certificate ~~of occupancy~~ represents an approval that is valid only when the residential building or structure is used as approved and certifies conformance with applicable provisions of the "Residential Code of Ohio for One-, Two-, and Three-family Dwellings" and Chapters 3781. and 3791. of the Revised Code. The approval is conditioned upon the building systems and equipment being maintained and tested in accordance with the approval, the "RCO", and applicable equipment and systems schedules.*

111.5 Connection of service utilities. *No connections shall be made from a utility, source of energy, fuel or power to any residential building or system that is regulated by this code for which a plan approval and inspections are required, until approved by the residential building official.*

111.6 Temporary connection. *The residential building official shall approve the temporary connection of the residential building or system to the utility source of energy, fuel or power.*

SECTION 112
CHANGES TO THE CODE

112.1 Changes, board of building standards. *The board may adopt, amend, or rescind the rules of the board on its own motion or in response to an application for changes filed pursuant to this section.*

112.2 Changes, application to the board. *Any person may apply to the board to adopt, amend, or rescind rules of the board. The application for rule change shall be on forms and in format prescribed by the board. Twelve printed copies of the application shall be filed with the secretary of the board.*

112.3 Changes, application to the residential construction advisory committee*. In addition to section 112.2, any person may apply to the residential construction advisory committee to recommend to the board that it adopt, amend, or rescind provisions of the RCO. The application for rule change shall be on forms and in format prescribed by the board and directed to the chairperson of the residential construction advisory committee. Twelve printed copies of the application shall be filed with the secretary of the board.*

112.4 Processing applications for changes. *When the secretary of the board receives a conforming application for an adoption, amendment, or annulment of a provision of the rules of the board, the secretary shall promptly deliver or mail a copy of the application to each member of the board or to each member of the residential construction advisory committee for a recommendation to the board as appropriate.*

After receiving an application for the adoption, amendment, or annulment of a provision of the rules of the board or a recommendation of the residential construction advisory committee, the board shall proceed under sections 3781.101 and 3781.12 of the Revised Code.

SECTION 113
EXISTING BUILDINGS AND STRUCTURES

113.1 General . *Provisions within this section shall control the alteration, repair, addition and change of occupancy if existing residential buildings.*

113.2 Maintenance. *Residential buildings, structures and the building equipment shall be maintained in a safe and sanitary condition and in accordance with the condition(s) established in current and any previous plan approvals and*

certificates of occupancy. Devices or safeguards which are required by this code shall be maintained in conformance with the code edition under which installed. The owner or the owner's designated agent shall be responsible for the maintenance.

The requirements of this chapter shall not provide the basis for removal or abrogation of fire protection and safety systems and devices in existing structures without approval of the residential building official.

113.3 Definitions. *The following terms shall, for the purposes of this section and as used elsewhere in the code, have the following meanings:*

CHANGE OF OCCUPANCY. *A change in the purpose or level of activity within a structure that involves a change in the application of the requirements of the code.*

HISTORIC BUILDINGS. *A residential building meeting one of the following criteria:*

1. *Listed or preliminarily determined to be eligible for listing in the "National Register of Historic Places"; or*

2. *Determined by the secretary of the U.S. department of interior as contributing to the historical significance of a registered historic district or a district preliminarily determined to qualify as an historic district; or*

3. *Designated as historic under a state or local historic preservation program that is approved by the U.S. department of interior.*

113.4 Additions and alterations. *Additions or alterations to residential buildings shall conform with the requirements of the code for new construction and shall be approved by the residential building official. Additions or alterations shall not be made to an existing residential building or structure which will cause the existing residential building or structure to be in violation of any provisions of this code. Portions of the structure not altered and not affected by the alteration are not required to comply with the code requirements for a new structure.*

Exception: *For residential buildings and structures in flood hazard areas, any*

additions, alterations or repairs that constitute substantial improvement of the existing structure, shall comply with the flood design requirements for new construction and all aspects of the existing structure shall be brought into compliance with the requirements for new construction for flood design.

113.5 Alterations to and replacement of systems, components and materials. *Alterations to and replacements of an existing system (egress, fire protection, mechanical, plumbing, etc.) and materials or building components not otherwise provided for in this section, shall conform to that required for new construction to the extent of the alteration. The existing systems, materials, or components shall not be required to comply with all of the requirements of this code for new construction except to the extent that they are affected by the alteration. Alterations to and replacements of existing systems, materials, or components shall not cause them to become unsafe, hazardous, overloaded, or become less effective than when originally installed, constructed, and/or approved.*

113.6 Replacement and repairs to systems, components and materials*. Replacement of residential building components, and repairs to existing systems and materials or building components not otherwise provided for in this section, shall not be required to meet the provisions for new construction, provided such work is done in accordance with the conditions of the existing approval in the same manner and arrangement as was in the existing system, is not less safe than when originally installed and is approved.*

113.6.1 Door and window dimensions. *Minor reductions in the clear opening dimensions of replacement doors and windows that result from the use of different materials shall be allowed, whether or not they are permitted by this code.*

113.6.2 Used materials and equipment. *The use of used materials which meet the requirements of this code for new materials is permitted. Used equipment, appliances, and devices shall not be reused unless approved by the residential building official.*

113.7 Changes in occupancy. *A residential building, accessory structure, or space within a residential building shall not change in its use or purpose unless it is made to comply with the requirements of this code for such use and approved by the residential building official. An approval is not required when the code requirements are the same for both uses.*

113.7.1 Use of a residential building for other purposes. *No change of occupancy to uses within the scope of the OBC shall be made to any existing residential building, space within, or accessory structure unless such building is made to comply with the requirements of the OBC for such occupancy and approved by the building official with OBC enforcement authority.*

113.7.2 Type A family day care homes. *A residential building that is intended to be used in whole or in part as a licensed type A family day-care home shall be inspected in accordance with the type A family day-care home checklist (available from the board of building standards). The residential building official shall issue a report of the findings to the Ohio department of jobs and family services.*

113.8 Moved structures. *Residential structures moved shall be safe and sanitary and any repair, alteration, or change in occupancy shall comply with the provisions of this code for new structures. Field work, building location, foundations and foundation connections, wind loads, seismic loads, snow loads, and flood loads, shall comply with the requirements of this code.*

The residential building official shall be authorized to inspect, or require inspection at the expense of the owner, the various components of a relocated building to verify that they have not sustained damage. Building service equipment, mechanical, plumbing, and fire protection systems shall be tested to assure that they are in operating condition. Any repairs or alterations required as a result of such inspections shall be approved and completed prior to issuance of the certificate of occupancy.

113.9 Historic buildings. *The provisions of this code relating to the construction, repair, alteration, addition, restoration and movement of residential structures, and change of occupancy shall not be mandatory for historic buildings where such residential buildings are judged by the residential building official not to constitute a distinct life safety hazard.*

113.9.1 Flood hazard areas. *Within flood hazard areas established, the residential building shall be brought into conformance with section 322.*

Exception: *Historic buildings.*

SECTION 114
PRODUCTS AND MATERIALS

114.1 General. *Any material, product, assembly or method of construction used in a building or structure shall be approved by the building official. The provisions of this section describe the product approval process intended by the board of building standards in accordance with Section 3781.10 (C) of the Revised Code.*

114.2 Definitions. *The following words and terms shall, for the purposes of this section, have the meanings shown herein:*

Accreditation. *The formal recognition of a conformity assessment body's adherence and operation under a documented quality system whereby a third party (Accreditation Body) attests to technical competence and the specific scope of accreditation of the conformity assessment body .*

Accreditation body. *An authoritative body that is an established, independent, internationally recognized, third-party organization that performs accreditation to ascribe initial recognition and monitors, on an cyclical basis, the competency, integrity, and performance of conformity assessment bodies in accordance with established standards.*

Assembly. *A preassembled grouping of materials, products and/or components designed to act as a whole. This does not include industrialized units regulated by section 113.*

Calibration laboratory. *An established, independent, nationally recognized and accredited, third-party organization that regularly provides calibration services such as, but not limited to, tolerance testing to ensure the accuracy of measuring equipment used in construction.*

Conformity assessment body. *A body that performs conformity assessment services and can be an object of accreditation, such as a testing laboratory, inspection body, product certification body.*

Evaluation service. *An established, independent, nationally recognized and accredited, third-party conformity assessment body that is*

accredited as a product certification body and performs technical evaluations of building materials, products, and methods of construction where code requirements are not clear or the innovative products do not have national consensus standards. The evaluation of the product results in the issuance of a research report establishing the code compliance and conditions of its use based upon multiple sources of information including test reports, test data, performance data, or acceptance criteria, and can be approved for installation by the building official in accordance with the rules of the board.

Fabricator inspection agency. *An established, independent, nationally recognized and accredited, third-party conformity assessment body regularly engaged in fabrication of construction materials and methods of construction.*

Field evaluation body. *An established, independent, nationally recognized and accredited, third-party conformity assessment body regularly engaged in furnishing field inspection, observation, testing, or reporting services for construction materials, products, and methods of construction.*

Industry trade association certification program*. A certification program operated by an established and nationally recognized organization, founded and funded by businesses that operate in a specific industry, where the main focus is to monitor quality assurance among associated members.*

Insignia. *A mark or label prescribed in accordance with board procedures.*

Inspection body. *An established, independent, nationally recognized and accredited, third-party conformity assessment body regularly engaged in furnishing inspection, observation, testing, or reporting services for construction materials, products, and methods of construction. Such services include, but are not limited to geotechnical inspections, environmental inspections, mechanical and metallurgical analysis, non-destructive testing and evaluation, chemical analysis, and structural and product testing.*

Listing agency. *An established, independent, nationally recognized and accredited, third-party conformity assessment body that is accredited as a product certification body and conducts tests on materials, products, or methods of construction to certify products that meet the criteria for compliance with nationally recognized codes and standards. The product certification body allows its insignia of conformity to be placed on a material or product by the manufacturer, identifying that the material or product has been certified by the product certification body. The product certification body maintains a list or directory of all of the materials and products that they have certified and the conditions of their use.*

Material. *A manufactured form or substance designed to act as a whole.*

Method of construction. *A procedure or system intended to result in a finished building, structure or portion thereof.*

Product. *A material or device designed and manufactured to perform a predetermined function. Appliances, assemblies and equipment are also considered products.*

Product certification body. *An established, independent, nationally recognized and accredited, third-party conformity assessment body regularly engaged in conducting evaluation services, inspections and tests on materials and products to certify compliance with nationally recognized codes and standards. Product Certification Bodies are sub-classified as either Evaluation Services or Listing Agencies.*

Recognition. *An acceptance by the board of building standards of an accreditation body, a conformity assessment body, or an industry trade association certification program in accordance with the rules of the board of building standards.*

Special inspection agency. *An established, independent, nationally recognized and accredited, third-party conformity assessment body regularly engaged in performing special inspections as required by Chapter 17.*

Testing laboratory. *An established, independent, nationally recognized*

and accredited, third-party conformity assessment body regularly engaged in conducting tests of materials, products, or methods of construction to determine compliance with a specification or testing standard. The testing laboratory issues a report documenting the test results.

Figure 114.2
ORGANIZATION OF BOARD RECOGNIZED BODIES AND CERTIFICATION PROGRAMS

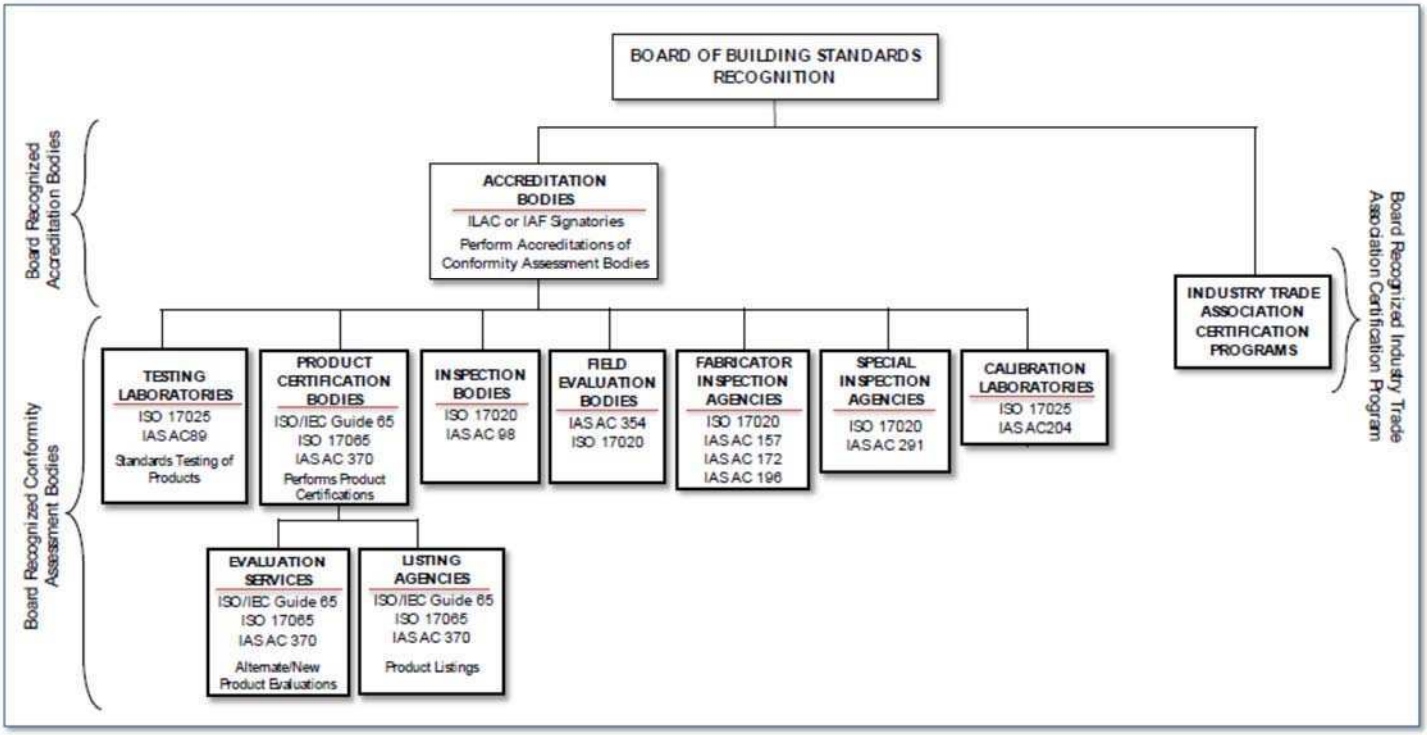

ILAC – International Laboratory Accreditation Cooperation
IAF – International Accreditation Forum
ISO – International Organization for Standardization
IAS – International Accreditation Service
IEC – International Electrotechnical Commission

114.3 Building official approval process. *The building official shall approve the use of products in accordance with Sections 114.3.1 through 114.3.3.*

114.3.1 Materials, products, assemblies and methods of construction

prescribed in the code.

114.3.1.1 Testing laboratories. *When test reports are required to be submitted or when the rules of the Board require materials, products, assemblies and methods of construction to conform to specific referenced standards, the building official shall verify that the proposed material, product, assembly, and method of construction has been tested by a testing laboratory recognized by the board and published on the list titled "Recognized Conformity Assessment Bodies" found on the board's website at http://www.com.ohio.gov/dico/bbs/.*

The building official shall verify that the testing laboratory is accredited to perform the specific tests prescribed in the code by verifying the testing laboratory's "scope of accreditation" found on the testing laboratory's website.

Exception: *Acceptance, performance, and operational testing reports submitted in accordance with Section 108.8 are permitted to be prepared and submitted by the individual performing the acceptance, performance, and operational tests. Board recognition is not required for persons conducting acceptance, performance, or operational tests.*

114.3.1.2 Listing agencies. *When the rules of the Board require materials, products, assemblies and methods of construction to be marked or listed and labeled in accordance with a specific referenced standard, the building official shall verify that the proposed material, product, assembly, and method of construction has been listed and labeled by a listing agency recognized by the board and published on the list titled "Recognized Conformity Assessment Bodies" found on the board's website at http://www.com.ohio.gov/dico/bbs/.*

Building officials are authorized to approve listed and labeled materials, products, assemblies and methods of construction after verifying all of the following additional information:

1. *The product is listed on the product certification body's website*

directory.

2. The listing is current.

3. The product is proposed to be installed/used in accordance with the listing.

4. When used as an assembly, the assembly is proposed to be installed/used in compliance with this code.

5. The extent of the listing does not include in its scope, elements of design, construction or installation otherwise in conflict with the provisions of this code such as fire-resistance and structural design.

114.3.2 Alternative materials, products, assemblies and methods of construction not prescribed in the code. *The provisions of this code are not intended to prevent the installation of any material or to prohibit any material, product, assembly or method of construction not specifically prescribed by this code, provided that any such alternative shall have a valid research report or listing from an evaluation service recognized by the board and published on a list titled "Recognized Conformity Assessment Bodies" found on the board's website at http://www.com.ohio.gov/dico/bbs/.*

The alternative material, product, assembly, or method of construction shall be deemed to be approved provided it complies with the conditions listed in the research report or listing found on the evaluation service's website.

Exceptions:

1. *Alternative materials, products, assemblies, or methods of construction submitted pursuant to section 106.5.*
2. *Industrialized units shall be approved and constructed in accordance with section 113.1 of this chapter.*

114.3.2.1 Evaluation Service Reports. *Building officials are authorized to accept evaluation service reports for materials, products, assemblies, and methods of construction from recognized*

evaluation service agencies after reviewing and verifying all of the following minimum information in the evaluation service report:

1. *Identification and description of the product specifically addressed in the report and a description of how the product can be identified;*
2. *Identification of the specific code provisions to which the product was evaluated as a suitable alternative to the requirements of the code;*
3. *The product installation requirements;*
4. *The statement of the conditions and limitations of use of the product; and*
5. *List the test reports used in the evaluation.*

114.3.3 Used materials and products. *The use of used materials and products which meet the requirements of this code for new materials and products is permitted. Used products and materials shall not be reused unless approved by the building official.*

114.4 Process for board-recognition of "Accreditation Bodies," "Conformity Assessment Bodies," and "Industry Trade Association Certification Programs." *All accreditation bodies, conformity assessment bodies, and industry trade association certification programs shall be recognized by the board in accordance with division 4101:7 of the Administrative Code.*

Section 115
Board Organization

115.1 Meetings.

1. ***Meeting schedule.*** *No later than December thirty-first of each year, the board shall establish a schedule of the dates, times, and locations of all regular board meetings and meetings of board committees for the following calendar year. Such schedule shall be posted on the board's website: http://www.com.ohio.gov/dico/bbs/.*

2. ***Meeting location.*** *All meetings of the board shall be held in offices of the Ohio department of commerce, training room #1, 6606 Tussing Rd., Reynoldsburg, Ohio, 43068, unless otherwise designated.*

115.2 Notices. *Prior to all regular or special meetings of the board, the executive secretary shall distribute the agenda, including meeting date, time, and location, by electronic mail to any person who has requested such information.*

115.3 Rules. *All rules of the board shall be adopted in accordance with Chapter 119. of the Revised Code.*

115.4 Board committees and duties. *The board shall have three standing committees.*

1. ***Code committee.*** *The code committee provides general oversight of the board's rule promulgation and code development activities. The committee reviews proposed rule changes and petitions for code changes and shall make recommendations to the board for action.*

2. ***Education committee.*** *The education committee provides general oversight to the board's continuing education program. The committee reviews continuing education course applications submitted for approval pursuant to paragraph (G) of rule 4101:7-3-01 of the Administrative Code and shall make recommendations to the board for action on the applications.*

3. ***Certification committee.*** *The certification committee provides general oversight to the board's personnel and building department certification program. The committee reviews personnel and building department certification applications submitted for approval pursuant to paragraph (G) of rule 4101:7-3-01 of the Administrative Code and shall make recommendations to the board for action on the applications.*

Effective:	1/1/2018
Five Year Review (FYR) Dates:	1/1/2018

CERTIFIED ELECTRONICALLY

Certification

12/22/2017

Date

Promulgated Under:	119.03
Statutory Authority:	3781.10(A)
Rule Amplifies:	3781.01, 4740.14, 3791.04, 3781.11, 3781.10, 3781.06
Prior Effective Dates:	5/27/06, 7/1/07, 1/1/08, 1/1/09, 1/1/13, 1/1/15, 1/1/16

4101:8-5-01 Floors.

[Comment: When a reference is made within this rule to a federal statutory provision, an industry consensus standard, or any other technical publication, the specific date and title of the publication as well as the name and address of the promulgating agency are listed in rule 4101:8-44-01 of the Administrative Code. The application of the referenced standards shall be limited and as prescribed in section 102.5 of rule 4101:8-1-01 of the Administrative Code.]

SECTION 501
GENERAL

501.1 Application. The provisions of this chapter shall control the design and construction of the floors for all buildings including the floors of attic spaces used to house mechanical or plumbing fixtures and equipment.

501.2 Requirements. Floor construction shall be capable of accommodating all loads according to Section 301 and of transmitting the resulting loads to the supporting structural elements.

SECTION 502
WOOD FLOOR FRAMING

502.1 Identification. Load-bearing dimension lumber for joists, beams and girders shall be identified by a grade mark of a lumber grading or inspection agency that has been approved by an accreditation body that complies with DOC PS 20. In lieu of a grade mark, a certificate of inspection issued by *an approved* lumber grading or inspection agency meeting the requirements of this section shall be accepted.

502.1.1 Preservative-treated lumber. Preservative treated dimension lumber shall also be identified as required by Section 317.2.

502.1.2 Blocking and subflooring. Blocking shall be a minimum of utility grade lumber. Subflooring may be a minimum of utility grade lumber or No. 4 common grade boards.

502.1.3 End-jointed lumber. Approved end-jointed lumber identified by a grade mark conforming to Section 502.1 may be used interchangeably with solid-sawn members of the same species and grade.

502.1.4 Prefabricated wood I-joists. Structural capacities and design provisions for prefabricated wood I-joists shall be established and monitored in accordance with ASTM D 5055.

502.1.5 Structural glued laminated timbers. Glued laminated timbers shall be manufactured and identified as required in ANSI/AITC A190.1 and ASTM D 3737.

502.1.6 Structural log members. Stress grading of structural log members of nonrectangular shape, as typically used in log buildings, shall be in accordance with ASTM D 3957. Such structural log members shall be identified by the grade mark of an approved lumber grading or inspection agency. In lieu of a grade mark on the material, a certificate of inspection as to species and grade issued by *an approved* lumber-grading or inspection agency meeting the requirements of this section shall be accepted.

502.1.7 Exterior wood/plastic composite deck boards. Wood/plastic composites used in exterior deck boards shall comply with the provisions of Section 317.4.

502.2 Design and construction. Floors shall be designed and constructed in accordance with the provisions of this chapter, Figure 502.2 and Sections 317 and 318 or in accordance with AF&PA/NDS.

502.2.1 Framing at braced wall lines. A load path for lateral forces shall be provided between floor framing and braced wall panels located above or below a floor, as specified in Section 602.10.8.

502.2.2 Decks. Where supported by attachment to an exterior wall, decks shall be positively anchored to the primary structure and designed for both vertical and lateral loads as applicable. Such attachment shall not be accomplished by the use of toenails or nails subject to withdrawal. Where positive connection to the primary building structure cannot be verified during inspection, decks shall be self-supporting. For decks with cantilevered framing members, connections to exterior walls or other framing members, shall be designed and constructed to resist uplift resulting from the full live load specified in Table 301.5 acting on the cantilevered portion of the deck.

502.2.2.1 Deck ledger connection to band joist. For decks supporting a total design load of 50 pounds per square foot (2394 Pa) [40 pounds per square foot (1915 Pa) live load plus 10 pounds per square foot (479 Pa) dead

load], the connection between a deck ledger of pressure-preservative-treated Southern Pine, incised pressure-preservative-treated Hem-Fir or approved decay-resistant species, and a 2-inch (51 mm) nominal lumber band joist bearing on a sill plate or wall plate shall be constructed with ½-inch (12.7 m) lag screws or bolts with washers in accordance with Table 502.2.2.1. Lag screws, bolts and washers shall be hot-dipped galvanized or stainless steel.

502.2.2.1.1 Placement of lag screws or bolts in deck ledgers. The lag screws or bolts shall be placed 2 inches (51 mm) in from the bottom or top of the deck ledgers and between 2 and 5 inches (51 and 127 mm) in from the ends. The lag screws or bolts shall be staggered from the top to the bottom along the horizontal run of the deck ledger.

502.2.2.2 Alternate deck ledger connections. Deck ledger connections not conforming to Table 502.2.2.1 shall be designed in accordance with accepted engineering practice. Girders supporting deck joists shall not be supported on deck ledgers or band joists. Deck ledgers shall not be supported on stone or masonry veneer.

502.2.2.3 Deck lateral load connection. *Deleted.*

502.2.2.4 Exterior wood/plastic composite deck boards. Wood/plastic composite deck boards shall be installed in accordance with the manufacturer's instructions.

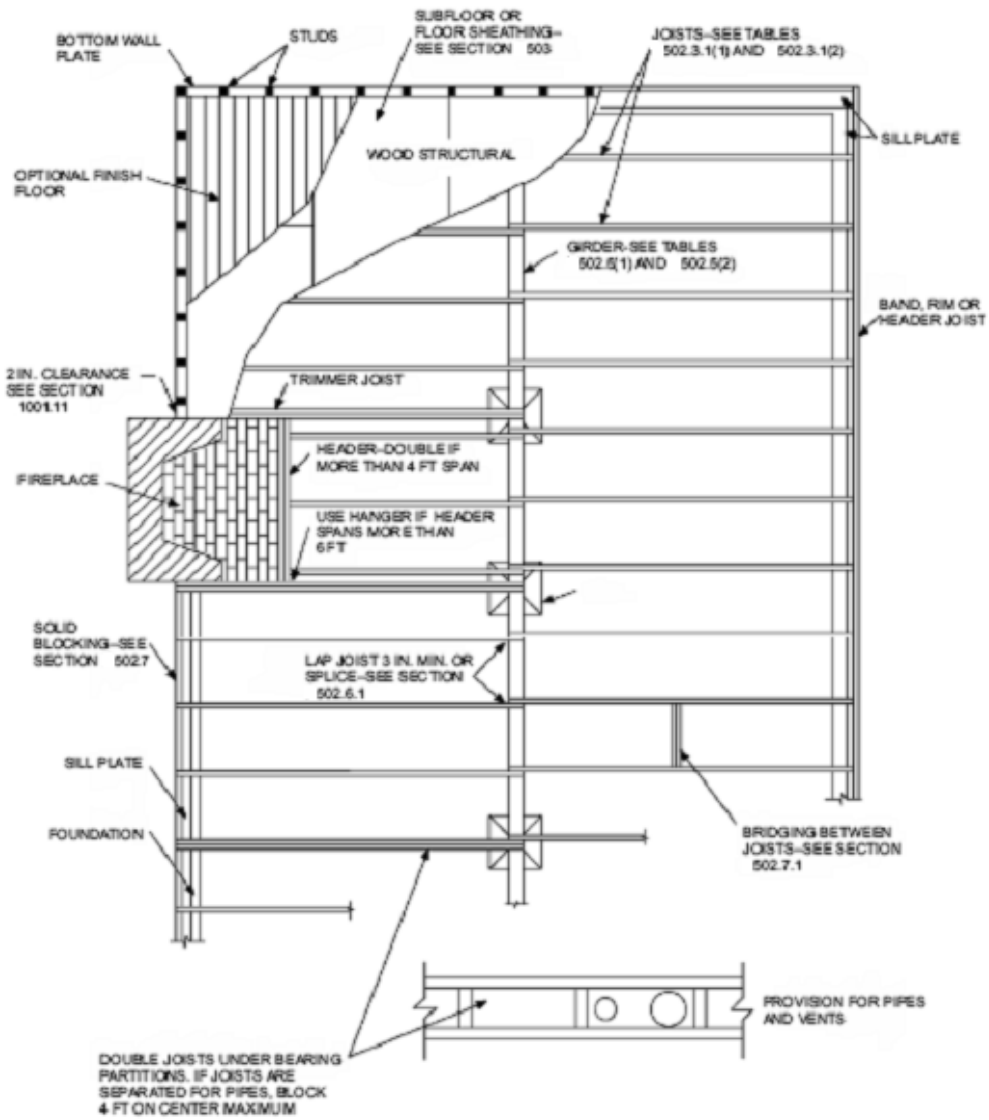

For SI: 1 inch = 25.4 mm.

FIGURE 502.2
FLOOR CONSTRUCTION

TABLE 502.2.2.1
FASTENER SPACING FOR A SOUTHERN PINE OR HEM-FIR DECK LEDGER AND A 2-INCH NOMINAL SOLID-SAWN SPRUCE-PINE-FIR BAND JOIST[c, f, g]
(Deck live load = 40 psf, deck dead load = 10 psf)

JOIST SPAN	6' and less	6' 1" to 8'	8' 1" to 10'	10' 1" to 12'	12' 1 "to 14'	14' 1" to 16'	16' 1" to 18'
Connection details	**On-center spacing of fasteners[d, e]**						
½ inch diameter lag screw with 15/32 inch maximum sheathing[a]	30	23	18	15	13	11	10
½ inch diameter bolt with 15/32 inch maximum sheathing	36	36	34	29	24	21	19
½ inch diameter bolt with 15/32 inch maximum sheathing and ½ inch stacked washers[b, h]	36	36	29	24	21	18	16

For SI: 1 inch = 25.4 mm, 1 foot = 304.8 mm. 1 pound per square foot = 0.0479kPa.

a. The tip of the lag screw shall fully extend beyond the inside face of the band joist.

b. The maximum gap between the face of the ledger board and face of the wall sheathing shall be ½″.

c. Ledgers shall be flashed to prevent water from contacting the house band joist.

d. Lag screws and bolts shall be staggered in accordance with Section 502.2.2.1.1.

e. Deck ledger shall be minimum 2×8 pressure-preservative-treated No.2 grade lumber, or other approved materials as established by standard engineering practice.

f. When solid-sawn pressure-preservative-treated deck ledgers are attached to a minimum 1 inch thick engineered wood product (structural composite lumber, laminated veneer lumber or wood structural panel band joist), the ledger attachment shall be designed in accordance with accepted engineering practice.

g. A minimum 1 ×9½ Douglas Fir laminated veneer lumber rimboard shall be permitted in lieu of the 2-inch nominal band joist.

h. Wood structural panel sheathing, gypsum board sheathing or foam sheathing not exceeding 1 inch in thickness shall be permitted. The maximum distance between the face of the ledger board and the face of the band joist shall be 1 inch.

FIGURE 502.2.2.3 ***Deleted.***

502.3 Allowable joist spans. Spans for floor joists shall be in accordance with Tables 502.3.1(1) and 502.3.1(2). For other grades and species and for other loading conditions, refer to the AF&PA Span Tables for Joists and Rafters

502.3.1 Sleeping areas and attic joists. Table 502.3.1(1) shall be used to determine the maximum allowable span of floor joists that support sleeping areas and attics that are accessed by means of a fixed stairway in accordance with Section 311.7 provided that the design live load does not exceed 30 pounds per square foot (1.44. kPa) and the design dead load does not exceed 20 pounds per square foot (0.96 kPa). The allowable span of ceiling joists that support attics used for limited storage or no storage shall be determined in accordance with Section 802.4.

502.3.2 Other floor joists. Table 502.3.1(2) shall be used to determine the maximum allowable span of floor joists that support all other areas of the building, other than sleeping rooms and attics, provided that the design live load does not exceed 40 pounds per square foot (1.92 kPa) and the design dead load does not exceed 20 pounds per square foot (0.96 kPa).

502.3.3 Floor cantilevers. Floor cantilever spans shall not exceed the nominal depth of the wood floor joist. Floor cantilevers constructed in accordance with Table 502.3.3(1) shall be permitted when supporting a light-frame bearing wall and roof only. Floor cantilevers supporting an exterior balcony are permitted to be constructed in accordance with Table 502.3.3(2).

502.4 Joists under bearing partitions. Joists under parallel bearing partitions shall be of adequate size to support the load. Double joists, sized to adequately support the load, that are separated to permit the installation of piping or vents shall be full depth solid blocked with lumber not less than 2 inches (51 mm) in nominal thickness spaced not more than 4 feet (1219 mm) on center. Bearing partitions perpendicular to joists shall not be offset from supporting girders, walls or partitions more than the joist depth unless such joists are of sufficient size to carry the additional load.

502.5 Allowable girder spans. The allowable spans of girders fabricated of dimension lumber shall not exceed the values set forth in Tables 502.5(1) and 502.5(2).

502.6 Bearing. The ends of each joist, beam or girder shall have not less than 1.5 inches (38 mm) of bearing on wood or metal and not less than 3 inches (76 mm) on masonry or concrete except where supported on a 1-inch-by-4-inch (25.4 mm by 102 mm) ribbon strip and nailed to the adjacent stud or by the use of approved joist hangers.

502.6.1 Floor systems. Joists framing from opposite sides over a bearing support shall lap a minimum of 3 inches (76 mm) and shall be nailed together with a minimum three 10d face nails. A wood or metal splice with strength equal to or greater than that provided by the nailed lap is permitted.

502.6.2 Joist framing. Joists framing into the side of a wood girder shall be supported by approved framing anchors or on ledger strips not less than nominal 2 inches by 2 inches (51 mm by 51 mm).

502.6.3 Beams ending on an open pocket. *When not prescribed in the manufacturer's installation instructions, or as otherwise may be prescribed by a registered design professional, at a minimum, beams ending on an open pocket shall use clip angles to attach the beam to the foundation at beam pockets. The clip angle to beam connection shall be either a welded or a bolted connection.*
When the clip angle to beam connection is a welded connection, the clip angle shall be welded to the beam along the clip angle's entire length. When the clip angle to beam connection is a bolted connection, the clip angle shall be bolted to the beam using no less than ½" diameter bolts.
The clip angle shall be attached to the foundation wall using no less than a ½" diameter anchor placed in the middle of the clip angle.

502.7 Lateral restraint at supports. Joists shall be supported laterally at the ends by full-depth solid blocking not less than 2 inches (51 mm) nominal in thickness; or by attachment to a full-depth header, band or rim joist, or to an adjoining stud or shall be otherwise provided with lateral support to prevent rotation.

Exceptions:

1. Trusses, structural composite lumber, structural glued-laminated members and I-joists shall be supported laterally as required by the manufacturer's recommendations.

2. In Seismic Design Categories D_0, D_1 and D_2, lateral restraint shall also be provided at each intermediate support.

502.7.1 Bridging. Joists exceeding a nominal 2 inches by 12 inches (51 mm by 305 mm) shall be supported laterally by solid blocking, diagonal bridging (wood or metal), or a continuous 1-inch-by-3-inch (25.4 mm by 76 mm) strip nailed across the bottom of joists perpendicular to joists at intervals not exceeding 8 feet (2438 mm).

Exception: Trusses, structural composite lumber, structural glued-laminated members and I-joists shall be supported laterally as required by the manufacturer's recommendations.

502.8 Drilling and notching. Structural floor members shall not be cut, bored or notched in excess of the limitations specified in this section. See Figure 502.8.

502.8.1 Sawn lumber. Notches in solid lumber joists, rafters and beams shall not exceed one-sixth of the depth of the member, shall not be longer than one-third of the depth of the member and shall not be located in the middle one-third of the span. Notches at the ends of the member shall not exceed one-fourth the depth of the member. The tension side of members 4 inches (102 mm) or greater in nominal thickness shall not be notched except at the ends of the members. The diameter of holes bored or cut into members shall not exceed one-third the depth of the member. Holes shall not be closer than 2 inches (51 mm) to the top or bottom of the member, or to any other hole located in the member. Where the member is also notched, the hole shall not be closer than 2 inches (51 mm) to the notch.

502.8.2 Engineered wood products. Cuts, notches and holes bored in trusses, structural composite lumber, structural glue-laminated members or I-joists are prohibited except where permitted by the manufacturer's recommendations or where the effects of such alterations are specifically considered in the design of the member by a registered design professional.

502.9 Fastening. Floor framing shall be nailed in accordance with Table 602.3(1). Where posts and beam or girder construction is used to support floor framing, positive connections shall be provided to ensure against uplift and lateral displacement.

502.9.1 Column to beam fastening. *When not prescribed in the manufacturer's installation instructions, or as otherwise may be prescribed by a registered design professional, at a minimum, the top plate of supporting steel column(s) shall be connected to the beam using either welded or bolted connections.*

1. When a beam ends in a concrete pocket and the column to beam connection is a welded connection, the top plate of the column shall be welded along the length of the two sides of the top plate perpendicular to the steel beam's length. When the column to beam connection is a bolted connection, no less than two ½" diameter bolts placed diagonally shall be used through the top plate of the steel column(s) and the bottom of the beam. The base plate(s) of steel column(s) shall be anchored to concrete footing pad(s) with no less than two ½" diameter anchors or bolts placed diagonally through the base plate(s) of the steel column(s) into the concrete footing pad(s).

2. When a beam ends on a steel column rather than in a beam pocket, and that connection is a bolted connection, no less than four ½" diameter bolts shall be used connecting the top plate of the steel column to the beam. The base plate of the steel column shall be anchored to the concrete footing pad with

no less than four ½" diameter anchors through the base plate of the steel column to the concrete footing pad.

All powder actuated fasteners are prohibited when connecting steel column top plates to beams and steel column base plates to concrete footing pads.

502.10 Framing of openings. Openings in floor framing shall be framed with a header and trimmer joists. When the header joist span does not exceed 4 feet (1219 mm), the header joist may be a single member the same size as the floor joist. Single trimmer joists may be used to carry a single header joist that is located within 3 feet (914 mm) of the trimmer joist bearing. When the header joist span exceeds 4 feet (1219 mm), the trimmer joists and the header joist shall be doubled and of sufficient cross section to support the floor joists framing into the header. Approved hangers shall be used for the header joist to trimmer joist connections when the header joist span exceeds 6 feet (1829 mm). Tail joists over 12 feet (3658 mm) long shall be supported at the header by framing anchors or on ledger strips not less than 2 inches by 2 inches (51 mm by 51 mm).

TABLE 502.3.1(1)
FLOOR JOIST SPANS FOR COMMON LUMBER SPECIES
(Residential sleeping areas, live load = 30 psf, L/Δ = 360)[a]

JOIST SPACING (inches)	SPECIES AND GRADE		DEAD LOAD = 10 psf				DEAD LOAD = 20 psf			
			2×6	2×8	2×10	2×12	2×6	2×8	2×10	2×12
			Maximum floor joist spans							
			(ft - in.)	(ft - in.)	(ft - in.)	(ft - in.)	(ft - in.)	(ft - in.)	(ft - in.)	(ft - in.)
12	Douglas fir-larch	SS	12-6	16-6	21-0	25-7	12-6	16-6	21-0	25-7
	Douglas fir-larch	#1	12-0	15-10	20-3	24-8	12-0	15-7	19-0	22-0
	Douglas fir-larch	#2	11-10	15-7	19-10	23-0	11-6	14-7	17-9	20-7
	Douglas fir-larch	#3	9-8	12-4	15-0	17-5	8-8	11-0	13-5	15-7
	Hem-fir	SS	11-10	15-7	19-10	24-2	11-10	15-7	19-10	24-2
	Hem-fir	#1	11-7	15-3	19-5	23-7	11-7	15-2	18-6	21-6
	Hem-fir	#2	11-0	14-6	18-6	22-6	11-0	14-4	17-6	20-4
	Hem-fir	#3	9-8	12-4	15-0	17-5	8-8	11-0	13-5	15-7
	Southern pine	SS	12-3	16-2	20-8	25-1	12-3	16-2	20-8	25-1
	Southern pine	#1	12-0	15-10	20-3	24-8	12-0	15-10	20-3	24-8
	Southern pine	#2	11-10	15-7	19-10	24-2	11-10	15-7	18-7	21-9
	Southern pine	#3	10-5	13-3	15-8	18-8	9-4	11-11	14-0	16-8
	Spruce-pine-fir	SS	11-7	15-3	19-5	23-7	11-7	15-3	19-5	23-7
	Spruce-pine-fir	#1	11-3	14-11	19-0	23-0	11-3	14-7	17-9	20-7
	Spruce-pine-fir	#2	11-3	14-11	19-0	23-0	11-3	14-7	17-9	20-7
	Spruce-pine-fir	#3	9-8	12-4	15-0	17-5	8-8	11-0	13-5	15-7

16	Douglas fir-larch	SS	11-4	15-0	19-1	23-3	11-4	15-0	19-1	23-0
	Douglas fir-larch	#1	10-11	14-5	18-5	21-4	10-8	13-6	16-5	19-1
	Douglas fir-larch	#2	10-9	14-1	17-2	19-11	9-11	12-7	15-5	17-10
	Douglas fir-larch	#3	8-5	10-8	13-0	15-1	7-6	9-6	11-8	13-6
	Hem-fir	SS	10-9	14-2	18-0	21-11	10-9	14-2	18-0	21-11
	Hem-fir	#1	10-6	13-10	17-8	20-9	10-4	13-1	16-0	18-7
	Hem-fir	#2	10-0	13-2	16-10	19-8	9-10	12-5	15-2	17-7
	Hem-fir	#3	8-5	10-8	13-0	15-1	7-6	9-6	11-8	13-6
	Southern pine	SS	11-2	14-8	18-9	22-10	11-2	14-8	18-9	22-10
	Southern pine	#1	10-11	14-5	18-5	22-5	10-11	14-5	17-11	21-4
	Southern pine	#2	10-9	14-2	18-0	21-1	10-5	13-6	16-1	18-10
	Southern pine	#3	9-0	11-6	13-7	16-2	8-1	10-3	12-2	14-6
	Spruce-pine-fir	SS	10-6	13-10	17-8	21-6	10-6	13-10	17-8	21-4
	Spruce-pine-fir	#1	10-3	13-6	17-2	19-11	9-11	12-7	15-5	17-10
	Spruce-pine-fir	#2	10-3	13-6	17-2	19-11	9-11	12-7	15-5	17-10
	Spruce-pine-fir	#3	8-5	10-8	13-0	15-1	7-6	9-6	11-8	13-6
19.2	Douglas fir-larch	SS	10-8	14-1	18-0	21-10	10-8	14-1	18-0	21-0
	Douglas fir-larch	#1	10-4	13-7	16-9	19-6	9-8	12-4	15-0	17-5
	Douglas fir-larch	#2	10-1	12-10	15-8	18-3	9-1	11-6	14-1	16-3
	Douglas fir-larch	#3	7-8	9-9	11-10	13-9	6-10	8-8	10-7	12-4
	Hem-fir	SS	10-1	13-4	17-0	20-8	10-1	13-4	17-0	20-7
	Hem-fir	#1	9-10	13-0	16-4	19-0	9-6	12-0	14-8	17-0
	Hem-fir	#2	9-5	12-5	15-6	17-1	8-11	11-4	13-10	16-1
	Hem-fir	#3	7-8	9-9	11-10	13-9	6-10	8-8	10-7	12-4
	Southern pine	SS	10-6	13-10	17-8	21-6	10-6	13-10	17-8	21-6
	Southern pine	#1	10-4	13-7	17-4	21-1	10-4	13-7	16-4	19-6
	Southern pine	#2	10-1	13-4	16-5	19-3	9-6	12-4	14-8	17-2
	Southern pine	#3	8-3	10-6	12-5	14-9	7-4	9-5	11-1	13-2
	Spruce-pine-fir	SS	9-10	13-0	16-7	20-2	9-10	13-0	16-7	19-6
	Spruce-pine-fir	#1	9-8	12-9	15-8	18-3	9-1	11-6	14-1	16-3
	Spruce-pine-fir	#2	9-8	12-9	15-8	18-3	9-1	11-6	14-1	16-3
	Spruce-pine-fir	#3	7-8	9-9	11-10	13-9	6-10	8-8	10-7	12-4
24	Douglas fir-larch	SS	9-11	13-1	16-8	20-3	9-11	13-1	16-2	18-9
	Douglas fir-larch	#1	9-7	12-4	15-0	17-5	8-8	11-0	13-5	15-7
	Douglas fir-larch	#2	9-1	11-6	14-1	16-3	8-1	10-3	12-7	14-7
	Douglas fir-larch	#3	6-10	8-8	10-7	12-4	6-2	7-9	9-6	11-0
	Hem-fir	SS	9-4	12-4	15-9	19-2	9-4	12-4	15-9	18-5
	Hem-fir	#1	9-2	12-0	14-8	17-0	8-6	10-9	13-1	15-2
	Hem-fir	#2	8-9	11-4	13-10	16-1	8-0	10-2	12-5	14-4
	Hem-fir	#3	6-10	8-8	10-7	12-4	6-2	7-9	9-6	11-0
	Southern pine	SS	9-9	12-10	16-5	19-11	9-9	12-10	16-5	19-11
	Southern pine	#1	9-7	12-7	16-1	19-6	9-7	12-4	14-7	17-5
	Southern pine	#2	9-4	12-4	14-8	17-2	8-6	11-0	13-1	15-5
	Southern pine	#3	7-4	9-5	11-1	13-2	6-7	8-5	9-11	11-10
	Spruce-pine-fir	SS	9-2	12-1	15-5	18-9	9-2	12-1	15-0	17-5
	Spruce-pine-fir	#1	8-11	11-6	14-1	16-3	8-1	10-3	12-7	14-7
	Spruce-pine-fir	#2	8-11	11-6	14-1	16-3	8-1	10-3	12-7	14-7
	Spruce-pine-fir	#3	6-10	8-8	10-7	12-4	6-2	7-9	9-6	11-0

For SI: 1 inch = 25.4 mm, 1 foot = 304.8 mm, 1 pound per square foot = 0.0479 kPa.

Note: Check sources for availability of lumber in lengths greater than 20 feet.

a. Dead load limits for townhouses in Seismic Design Category C and all structures in Seismic Design Categories D_0, D_1 and D_2 shall be determined in accordance with Section 301.2.2.2.1.

TABLE 502.3.1(2)
FLOOR JOIST SPANS FOR COMMON LUMBER SPECIES
(Residential living areas, live load = 40 psf, L/Δ = 360)[b]

JOIST SPACING (inches)	SPECIES AND GRADE		DEAD LOAD = 10 psf				DEAD LOAD = 20 psf			
			2×6	2×8	2×10	2×12	2×6	2×8	2×10	2×12
			Maximum floor joist spans							
			(ft - in.)	(ft - in.)	(ft - in.)	(ft - in.)	(ft - in.)	(ft - in.)	(ft - in.)	(ft - in.)
12	Douglas fir-larch	SS	11-4	15-0	19-1	23-3	11-4	15-0	19-1	23-3
	Douglas fir-larch	#1	10-11	14-5	18-5	22-0	10-11	14-2	17-4	20-1
	Douglas fir-larch	#2	10-9	14-2	17-9	20-7	10-6	13-3	16-3	18-10
	Douglas fir-larch	#3	8-8	11-0	13-5	15-7	7-11	10-0	12-3	14-3
	Hem-fir	SS	10-9	14-2	18-0	21-11	10-9	14-2	18-0	21-11
	Hem-fir	#1	10-6	13-10	17-8	21-6	10-6	13-10	16-11	19-7
	Hem-fir	#2	10-0	13-2	16-10	20-4	10-0	13-1	16-0	18-6
	Hem-fir	#3	8-8	11-0	13-5	15-7	7-11	10-0	12-3	14-3
	Southern pine	SS	11-2	14-8	18-9	22-10	11-2	14-8	18-9	22-10
	Southern pine	#1	10-11	14-5	18-5	22-5	10-11	14-5	18-5	22-5
	Southern pine	#2	10-9	14-2	18-0	21-9	10-9	14-2	16-11	19-10
	Southern pine	#3	9-4	11-11	14-0	16-8	8-6	10-10	12-10	15-3
	Spruce-pine-fir	SS	10-6	13-10	17-8	21-6	10-6	13-10	17-8	21-6
	Spruce-pine-fir	#1	10-3	13-6	17-3	20-7	10-3	13-3	16-3	18-10
	Spruce-pine-fir	#2	10-3	13-6	17-3	20-7	10-3	13-3	16-3	18-10
	Spruce-pine-fir	#3	8-8	11-0	13-5	15-7	7-11	10-0	12-3	14-3
16	Douglas fir-larch	SS	10-4	13-7	17-4	21-1	10-4	13-7	17-4	21-0
	Douglas fir-larch	#1	9-11	13-1	16-5	19-1	9-8	12-4	15-0	17-5
	Douglas fir-larch	#2	9-9	12-7	15-5	17-10	9-1	11-6	14-1	16-3
	Douglas fir-larch	#3	7-6	9-6	11-8	13-6	6-10	8-8	10-7	12-4
	Hem-fir	SS	9-9	12-10	16-5	19-11	9-9	12-10	16-5	19-11
	Hem-fir	#1	9-6	12-7	16-0	18-7	9-6	12-0	14-8	17-0
	Hem-fir	#2	9-1	12-0	15-2	17-7	8-11	11-4	13-10	16-1
	Hem-fir	#3	7-6	9-6	11-8	13-6	6-10	8-8	10-7	12-4
	Southern pine	SS	10-2	13-4	17-0	20-9	10-2	13-4	17-0	20-9
	Southern pine	#1	9-11	13-1	16-9	20-4	9-11	13-1	16-4	19-6
	Southern pine	#2	9-9	12-10	16-1	18-10	9-6	12-4	14-8	17-2
	Southern pine	#3	8-1	10-3	12-2	14-6	7-4	9-5	11-1	13-2
	Spruce-pine-fir	SS	9-6	12-7	16-0	19-6	9-6	12-7	16-0	19-6
	Spruce-pine-fir	#1	9-4	12-3	15-5	17-10	9-1	11-6	14-1	16-3
	Spruce-pine-fir	#2	9-4	12-3	15-5	17-10	9-1	11-6	14-1	16-3
	Spruce-pine-fir	#3	7-6	9-6	11-8	13-6	6-10	8-8	10-7	12-4

19.2	Douglas fir-larch	SS	9-8	12-10	16-4	19-10	9-8	12-10	16-4	19-2
	Douglas fir-larch	#1	9-4	12-4	15-0	17-5	8-10	11-3	13-8	15-11
	Douglas fir-larch	#2	9-1	11-6	14-1	16-3	8-3	10-6	12-10	14-10
	Douglas fir-larch	#3	6-10	8-8	10-7	12-4	6-3	7-11	9-8	11-3
	Hem-fir	SS	9-2	12-1	15-5	18-9	9-2	12-1	15-5	18-9
	Hem-fir	#1	9-0	11-10	14-8	17-0	8-8	10-11	13-4	15-6
	Hem-fir	#2	8-7	11-3	13-10	16-1	8-2	10-4	12-8	14-8
	Hem-fir	#3	6-10	8-8	10-7	12-4	6-3	7-11	9-8	11-3
	Southern pine	SS	9-6	12-7	16-0	19-6	9-6	12-7	16-0	19-6
	Southern pine	#1	9-4	12-4	15-9	19-2	9-4	12-4	14-11	17-9
	Southern pine	#2	9-2	12-1	14-8	17-2	8-8	11-3	13-5	15-8
	Southern pine	#3	7-4	9-5	11-1	13-2	6-9	8-7	10-1	12-1
	Spruce-pine-fir	SS	9-0	11-10	15-1	18-4	9-0	11-10	15-1	17-9
	Spruce-pine-fir	#	8-9	11-6	14-1	16-3	8-3	10-6	12-10	14-10
	Spruce-pine-fir	#2	8-9	11-6	14-1	16-3	8-3	10-6	12-10	14-10
	Spruce-pine-fir	#3	6-10	8-8	10-7	12-4	6-3	7-11	9-8	11-3
24	Douglas fir-larch	SS	9-0	11-11	15-2	18-5	9-0	11-11	14-9	17-1
	Douglas fir-larch	#1	8-8	11-0	13-5	15-7	7-11	10-0	12-3	14-3
	Douglas fir-larch	#2	8-1	10-3	12-7	14-7	7-5	9-5	11-6	13-4
	Douglas fir-larch	#3	6-2	7-9	9-6	11-0	5-7	7-1	8-8	10-1
	Hem-fir	SS	8-6	11-3	14-4	17-5	8-6	11-3	14-4	16-10[a]
	Hem-fir	#1	8-4	10-9	13-1	15-2	7-9	9-9	11-11	13-10
	Hem-fir	#2	7-11	10-2	12-5	14-4	7-4	9-3	11-4	13-1
	Hem-fir	#3	6-2	7-9	9-6	11-0	5-7	7-1	8-8	10-1
	Southern pine	SS	8-10	11-8	14-11	18-1	8-10	11-8	14-11	18-1
	Southern pine	#1	8-8	11-5	14-7	17-5	8-8	11-3	13-4	15-11
	Southern pine	#2	8-6	11-0	13-1	15-5	7-9	10-0	12-0	14-0
	Southern pine	#3	6-7	8-5	9-11	11-10	6-0	7-8	9-1	10-9
	Spruce-pine-fir	SS	8-4	11-0	14-0	17-0	8-4	11-0	13-8	15-11
	Spruce-pine-fir	#1	8-1	10-3	12-7	14-7	7-5	9-5	11-6	13-4
	Spruce-pine-fir	#2	8-1	10-3	12-7	14-7	7-5	9-5	11-6	13-4
	Spruce-pine-fir	#3	6-2	7-9	9-6	11-0	5-7	7-1	-8	10-1

For SI: 1 inch = 25.4 mm, 1 foot = 304.8 mm, 1 pound per square foot = 0.0479 kPa.

Note: Check sources for availability of lumber in lengths greater than 20 feet.

a. End bearing length shall be increased to 2 inches.

b. Dead load limits for townhouses in Seismic Design Category C and all structures in Seismic Design Categories D_0, D_1, and D_2 shall be determined in accordance with Section 301.2.2.2.1.

TABLE 502.3.3(1)
CANTILEVER SPANS FOR FLOOR JOISTS SUPPORTING LIGHT-FRAME EXTERIOR BEARING WALL AND ROOF ONLY[a, b, c, f, g, h]
(Floor Live Load <40 psf, Roof Live Load <20 psf)

Member & Spacing	Maximum Cantilever Span (Uplift Force at Backspan Support in Lbs.)[d, e]											
	Ground Snow Load											
	20 psf			30 psf			50 psf			70 psf		
	Roof Width			Roof Width			Roof Width			Roof Width		
	24 ft	32 ft	40 ft	24 ft	32 ft	40 ft	24 ft	32 ft	40 ft	24 ft	32 ft	40 ft
2 x 8 @ 12”	20” (177)	15” (227)	-	18” (209)	-	-	-	-	-	-	-	-
2 x 10 @ 16”	29” (228)	21” (297)	16” (364)	26” (271)	18” (354)	-	20” (375)	-	-	-	-	-
2 x 10 @ 12”	36” (166)	26” (219)	20” (270)	34” (198)	22” (263)	16” (324)	26” (277)	-	-	19” (356)	-	-
2 x 12 @ 16”	-	32” (287)	25” (356)	36” (263)	29” (345)	21” (428)	29” (367)	20” (484)	-	23” (471)	-	-
2 x 12 @ 12”	-	42” (209)	31” (263)	-	37” (253)	27” (317)	36” (271)	27” (358)	17” (447)	31” (348)	19” (462)	-
2 x 12 @ 8”	-	48” (136)	45” (169)	-	48” (164)	38” (206)	-	40” (233)	26” (294)	36” (230)	29” (304)	18” (379)

For SI: 1 inch = 25.4 mm, 1 foot = 304.8 mm, 1 pound per square foot = 0.0479kPa.

a. Tabulated values are for clear-span roof supported solely by exterior bearing walls.

b. Spans are based on No. 2 Grade lumber of Douglas fir-larch, hem-fir, southern pine, and spruce-pine-fir for repetitive (3 or more) members.

c. Ratio of backspan to cantilever span shall be at least 3:1.

d. Connections capable of resisting the indicated uplift force shall be provided at the backspan support.

e. Uplift force is for a backspan to cantilever span ratio of 3:1. Tabulated uplift values are permitted to be reduced by multiplying by a factor equal to 3 divided by the actual backspan ratio provided (3/backspan ratio).

f. See Section 301.2.2.2.5, Item1, for additional limitations on cantilevered floor joists for detached one-, two- *and three*-family dwellings in Seismic Design Category D_0, D_1, or D_2 and townhouses in Seismic Design Category C, D_0, D_1, or D_2.

g. A full-depth rim joist shall be provided at the unsupported end of the cantilever joists. Solid blocking shall be provided at the supported end.

h. Linear interpolation shall be permitted for building widths and ground snow loads other than shown.

TABLE 502.3.3(2)
CANTILEVER SPANS FOR FLOOR JOISTS SUPPORTING EXTERIOR BALCONY[a, b, e, f]

Member Size	Spacing	Maximum Cantilever Span (Uplift Force at Backspan Support in lb)[c, d]		
		Ground Snow Load		
		30 psf	50 psf	70 psf
2 ×8	12″	42″(139)	39″(156)	34″(165)
2 ×8	16″	36″(151)	34″(171)	29″(180)
2 ×10	12″	61″(164)	57″(189)	49″(201)
2 ×10	16″	53″(180)	49″(208)	42″(220)
2 ×10	24″	43″(212)	40″(241)	34″(255)
2 ×12	16″	72″(228)	67″(260)	57″(268)
2 ×12	24″	58″(279)	54″(319)	47″(330)

For SI: 1 inch = 25.4 mm, 1 pound per square foot = 0.0479kPa.

a. Spans are based on No. 2 Grade lumber of Douglas fir-larch, hem-fir, southern pine, and spruce-pine-fir for repetitive (3 or more) members.

b. Ratio of backspan to cantilever span shall be at least 2:1.

c. Connections capable of resisting the indicated uplift force shall be provided at the backspan support.

d. Uplift force is for a backspan to cantilever span ratio of 2:1. Tabulated uplift values are permitted to be reduced by multiplying by a factor equal to 2 divided by the actual backspan ratio provided (2/backspan ratio).

e. A full-depth rim joist shall be provided at the unsupported end of the cantilever joists. Solid blocking shall be provided at the supported end.

f. Linear interpolation shall be permitted for ground snow loads other than shown.

TABLE 502.5(1)
GIRDER SPANS[a] AND HEADER SPANS[a] FOR EXTERIOR BEARING WALLS
(Maximum spans for Douglas fir-larch, hem-fir, southern pine and spruce-pine-fir[b] and required number of jack studs)

GIRDERS AND HEADERS SUPPORT-ING	SIZE	GROUND SNOW LOAD (psf)[e]																	
		30						50						70					
		Building width[c] (feet)																	
		20		28		36		20		28		36		20		28		36	
		Span	NJ[d]	Span	NJ[d]	Span	NJ[d]	Span	NJ[d]	Span	NJ[d]	Span	NJ[d]	Span	NJ[d]	Span	NJ[d]	Span	NJ[d]
Roof and ceiling	2-2×4	3-6	1	3-2	1	2-10	1	3-2	1	2-9	1	2-6	1	2-10	1	2-6	1	2-3	1
	2-2×6	5-5	1	4-8	1	4-2	1	4-8	1	4-1	1	3-8	2	4-2	1	3-8	2	3-3	2
	2-2×8	6-10	1	5-11	2	5-4	2	5-11	2	5-2	2	4-7	2	5-4	2	4-7	2	4-1	2
	2-2×10	8-5	2	7-3	2	6-6	2	7-3	2	6-3	2	5-7	2	6-6	2	5-7	2	5-0	2
	2-2×12	9-9	2	8-5	2	7-6	2	8-5	2	7-3	2	6-6	2	7-6	2	6-6	2	5-10	3
	3-2×8	8-4	1	7-5	1	6-8	1	7-5	1	6-5	2	5-9	2	6-8	1	5-9	2	5-2	2
	3-2×10	10-6	1	9-1	2	8-2	2	9-1	2	7-10	2	7-0	2	8-2	2	7-0	2	6-4	2
	3-2×12	12-2	2	10-7	2	9-5	2	10-7	2	9-2	2	8-2	2	9-5	2	8-2	2	7-4	2
	4-2×8	9-2	1	8-4	1	7-8	1	8-4	1	7-5	1	6-8	1	7-8	1	6-8	1	5-11	2
	4-2×10	11-8	1	10-6	1	9-5	2	10-6	1	9-1	2	8-2	2	9-5	2	8-2	2	7-3	2
	4-2×12	14-1	1	12-2	2	10-11	2	12-2	2	10-7	2	9-5	2	10-11	2	9-5	2	8-5	2
Roof, ceiling and one center-bearing floor	2-2×4	3-1	1	2-9	1	2-5	1	2-9	1	2-5	1	2-2	1	2-7	1	2-3	1	2-0	1
	2-2×6	4-6	1	4-0	1	3-7	2	4-1	1	3-7	2	3-3	2	3-9	2	3-3	2	2-11	2
	2-2×8	5-9	2	5-0	2	4-6	2	5-2	2	4-6	2	4-1	2	4-9	2	4-2	2	3-9	2
	2-2×10	7-0	2	6-2	2	5-6	2	6-4	2	5-6	2	5-0	2	5-9	2	5-1	2	4-7	3
	2-2×12	8-1	2	7-1	2	6-5	2	7-4	2	6-5	2	5-9	3	6-8	2	5-10	3	5-3	3
	3-2×8	7-2	1	6-3	2	5-8	2	6-5	2	5-8	2	5-1	2	5-11	2	5-2	2	4-8	2
	3-2×10	8-9	2	7-8	2	6-11	2	7-11	2	6-11	2	6-3	2	7-3	2	6-4	2	5-8	2
	3-2×12	10-2	2	8-11	2	8-0	2	9-2	2	8-0	2	7-3	2	8-5	2	7-4	2	6-7	2
	4-2×8	8-1	1	7-3	1	6-7	1	7-5	1	6-6	1	5-11	2	6-10	1	6-0	2	5-5	2
	4-2×10	10-1	1	8-10	2	8-0	2	9-1	2	8-0	2	7-2	2	8-4	2	7-4	2	6-7	2
	4-2×12	11-9	2	10-3	2	9-3	2	10-7	2	9-3	2	8-4	2	9-8	2	8-6	2	7-7	2
Roof, ceiling and one clear span floor	2-2×4	2-8	1	2-4	1	2-1	1	2-7	1	2-3	1	2-0	1	2-5	1	2-1	1	1-10	1
	2-2×6	3-11	1	3-5	2	3-0	2	3-10	2	3-4	2	3-0	2	3-6	2	3-1	2	2-9	2
	2-2×8	5-0	2	4-4	2	3-10	2	4-10	2	4-2	2	3-9	2	4-6	2	3-11	2	3-6	2
	2-2×10	6-1	2	5-3	2	4-8	2	5-11	2	5-1	2	4-7	3	5-6	2	4-9	2	4-3	3
	2-2×12	7-1	2	6-1	3	5-5	3	6-10	2	5-11	3	5-4	3	6-4	2	5-6	3	5-0	3
	3-2×8	6-3	2	5-5	2	4-10	2	6-1	2	5-3	2	4-8	2	5-7	2	4-11	2	4-5	2
	3-2×10	7-7	2	6-7	2	5-11	2	7-5	2	6-5	2	5-9	2	6-10	2	6-0	2	5-4	2

	3-2×12	8-10	2	7-8	2	6-10	2	8-7	2	7-5	2	6-8	2	7-11	2	6-11	2	6-3	2
	4-2×8	7-2	1	6-3	2	5-7	2	7-0	1	6-1	2	5-5	2	6-6	1	5-8	2	5-1	2
	4-2×10	8-9	2	7-7	2	6-10	2	8-7	2	7-5	2	6-7	2	7-11	2	6-11	2	6-2	2
	4-2×12	10-2	2	8-10	2	7-11	2	9-11	2	8-7	2	7-8	2	9-2	2	8-0	2	7-2	2
Roof, ceiling and two center-bearing floors	2-2×4	2-7	1	2-3	1	2-0	1	2-6	1	2-2	1	1-11	1	2-4	1	2-0	1	1-9	1
	2-2×6	3-9	2	3-3	2	2-11	2	3-8	2	3-2	2	2-10	2	3-5	2	3-0	2	2-8	2
	2-2×8	4-9	2	4-2	2	3-9	2	4-7	2	4-0	2	3-8	2	4-4	2	3-9	2	3-5	2
	2-2×10	5-9	2	5-1	2	4-7	3	5-8	2	4-11	2	4-5	3	5-3	2	4-7	3	4-2	3
	2-2×12	6-8	2	5-10	3	5-3	3	6-6	2	5-9	3	5-2	3	6-1	3	5-4	3	4-10	3
	3-2×8	5-11	2	5-2	2	4-8	2	5-9	2	5-1	2	4-7	2	5-5	2	4-9	2	4-3	2
	3-2×10	7-3	2	6-4	2	5-8	2	7-1	2	6-2	2	5-7	2	6-7	2	5-9	2	5-3	2
	3-2×12	8-5	2	7-4	2	6-7	2	8-2	2	7-2	2	6-5	3	7-8	2	6-9	2	6-1	3
	4-2×8	6-10	1	6-0	2	5-5	2	6-8	1	5-10	2	5-3	2	6-3	2	5-6	2	4-11	2
	4-2×10	8-4	2	7-4	2	6-7	2	8-2	2	7-2	2	6-5	2	7-7	2	6-8	2	6-0	2
	4-2×12	9-8	2	8-6	2	7-8	2	9-5	2	8-3	2	7-5	2	8-10	2	7-9	2	7-0	2
Roof, ceiling, and two clear span floors	2-2×4	2-1	1	1-8	1	1-6	2	2-0	1	1-8	1	1-5	2	2-0	1	1-8	1	1-5	2
	2-2×6	3-1	2	2-8	2	2-4	2	3-0	2	2-7	2	2-3	2	2-11	2	2-7	2	2-3	2
	2-2×8	3-10	2	3-4	2	3-0	3	3-10	2	3-4	2	2-11	3	3-9	2	3-3	2	2-11	3
	2-2×10	4-9	2	4-1	3	3-8	3	4-8	2	4-0	3	3-7	3	4-7	3	4-0	3	3-6	3
	2-2×12	5-6	3	4-9	3	4-3	3	5-5	3	4-8	3	4-2	3	5-4	3	4-7	3	4-1	4
	3-2×8	4-10	2	4-2	2	3-9	2	4-9	2	4-1	2	3-8	2	4-8	2	4-1	2	3-8	2
	3-2×10	5-11	2	5-1	2	4-7	3	5-10	2	5-0	2	4-6	3	5-9	2	4-11	2	4-5	3
	3-2×12	6-10	2	5-11	3	5-4	3	6-9	2	5-10	3	5-3	3	6-8	2	5-9	3	5-2	3
	4-2×8	5-7	2	4-10	2	4-4	2	5-6	2	4-9	2	4-3	2	5-5	2	4-8	2	4-2	2
	4-2×10	6-10	2	5-11	2	5-3	2	6-9	2	5-10	2	5-2	2	6-7	2	5-9	2	5-1	2
	4-2×12	7-11	2	6-10	2	6-2	3	7-9	2	6-9	2	6-0	3	7-8	2	6-8	2	5-11	3

For SI: 1 inch = 25.4 mm, 1 pound per square foot = 0.0479kPa.

a. Spans are given in feet and inches.

b. Tabulated values assume #2 grade lumber.

c. Building width is measured perpendicular to the ridge. For widths between those shown, spans are permitted to be interpolated.

d. NJ -Number of jack studs required to support each end. Where the number of required jack studs equals one, the header is permitted to be supported by an approved framing anchor attached to the full-height wall stud and to the header.

e. Use 30 psf ground snow load for cases in which ground snow load is less than 30 psf and the roof live load is equal to or less than 20 psf.

TABLE 502.5(2)
GIRDER SPANS[a] AND HEADER SPANS[a] FOR INTERIOR BEARING WALLS
(Maximum spans for Douglas fir-larch, hem-fir, southern pine and spruce-pine-fir[b] and required number of jack studs)

HEADERS AND GIRDERS SUPPORTING	SIZE	BUILDING WIDTH[c] (feet)					
		20		28		36	
		Span	NJ[d]	Span	NJ[d]	Span	NJ[d]
One floor only	2-2×4	3-1	1	2-8	1	2-5	1
	2-2×6	4-6	1	3-11	1	3-6	1
	2-2×8	5-9	1	5-0	2	4-5	2
	2-2×10	7-0	2	6-1	2	5-5	2
	2-2×12	8-1	2	7-0	2	6-3	2
	3-2×8	7-2	1	6-3	1	5-7	2
	3-2×10	8-9	1	7-7	2	6-9	2
	3-2×12	10-2	2	8-10	2	7-10	2
	4-2×8	9-0	1	7-8	1	6-9	1
	4-2×10	10-1	1	8-9	1	7-10	2
	4-2×12	11-9	1	10-2	2	9-1	2
Two floors	2-2×4	2-2	1	1-10	1	1-7	1
	2-2×6	3-2	2	2-9	2	2-5	2
	2-2×8	4-1	2	3-6	2	3-2	2
	2-2×10	4-11	2	4-3	2	3-10	3
	2-2×12	5-9	2	5-0	3	4-5	3
	3-2×8	5-1	2	4-5	2	3-11	2
	3-2×10	6-2	2	5-4	2	4-10	2
	3-2×12	7-2	2	6-3	2	5-7	3
	4-2×8	6-1	1	5-3	2	4-8	2
	4-2×10	7-2	2	6-2	2	5-6	2
	4-2×12	8-4	2	7-2	2	6-5	2

For SI: 1 inch = 25.4 mm, 1 foot = 304.8 mm.
a. Spans are given in feet and inches.
b. Tabulated values assume #2 grade lumber.
c. Building width is measured perpendicular to the ridge. For widths between those shown, spans are permitted to be interpolated.

d. NJ -Number of jack studs required to support each end. Where the number of required jack studs equals one, the header is permitted to be supported by an approved framing anchor attached to the full-height wall stud and to the header.

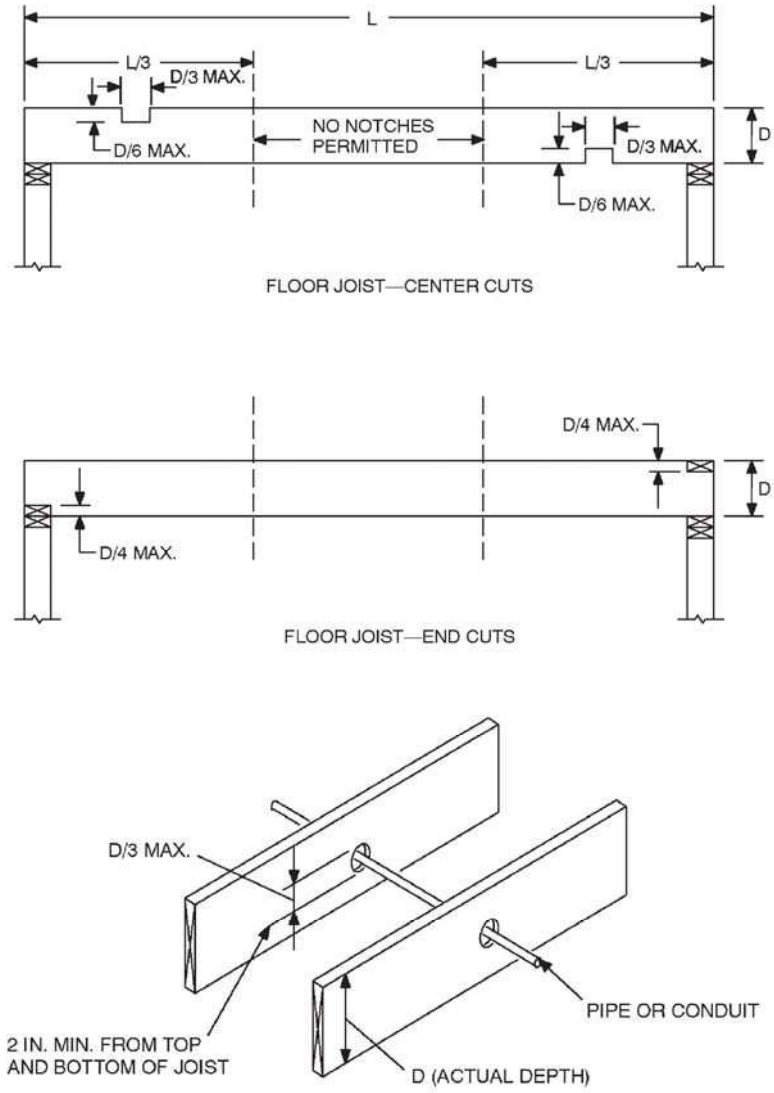

For SI: 1 inch = 25.4 mm.

FIGURE 502.8
CUTTING, NOTCHING AND DRILLING

502.11 Wood trusses.

502.11.1 Design. Wood trusses shall be designed in accordance with approved engineering practice. The design and manufacture of metal plate connected

wood trusses shall comply with ANSI/TPI 1. The truss design drawings shall be prepared by a registered professional in accordance with Section *106.2*.

502.11.2 Bracing. Trusses shall be braced to prevent rotation and provide lateral stability in accordance with the requirements specified in the construction documents for the building and on the individual truss design drawings. In the absence of specific bracing requirements, trusses shall be braced in accordance with the Building Component Safety Information (BCSI 1-03) Guide to Good Practice for Handling, Installing & Bracing of Metal Plate Connected Wood Trusses.

502.11.3 Alterations to trusses. Truss members and components shall not be cut, notched, spliced or otherwise altered in any way without the approval of a registered design professional. Alterations resulting in the addition of load (e.g., HVAC equipment, water heater, etc.), that exceed the design load for the truss, shall not be permitted without verification that the truss is capable of supporting the additional loading.

502.11.4 Truss design drawings. Truss design drawings, prepared in compliance with Section 502.11.1, shall be submitted to the building official and approved prior to installation. Truss design drawings shall be provided with the shipment of trusses delivered to the job site. Truss design drawings shall include, at a minimum, the information specified below:

1. Slope or depth, span and spacing.

2. Location of all joints.

3. Required bearing widths.

4. Design loads as applicable:

    4.1 Top chord live load;

    4.2 Top chord dead load;

    4.3 Bottom chord live load;

    4.4 Bottom chord dead load;

    4.5 Concentrated loads and their points of application; and

4.6 Controlling wind and earthquake loads.

5. Adjustments to lumber and joint connector design values for conditions of use.

6. Each reaction force and direction.

7. Joint connector type and description, e.g., size, thickness or gauge, and the dimensioned location of each joint connector except where symmetrically located relative to the joint interface.

8. Lumber size, species and grade for each member.

9. Connection requirements for:

   9.1 Truss-to-girder-truss;

   9.2 Truss ply-to-ply; and

   9.3 Field splices.

10. Calculated deflection ratio and/or maximum description for live and total load.

11. Maximum axial compression forces in the truss members to enable the building designer to design the size, connections and anchorage of the permanent continuous lateral bracing. Forces shall be shown on the truss drawing or on supplemental documents.

12. Required permanent truss member bracing location.

502.12 Draftstopping required. Draftstopping shall be provided in accordance with Section 302.12.

502.13 Fireblocking required. Fireblocking shall be provided in accordance with Section 302.11.

502.14 Fire Resistance of floors. *Floor assemblies, not required elsewhere in this code to be fire resistance rated, shall be provided with a ½ inch gypsum board*

membrane or a 5/8 inch wood structural panel membrane or an equivalent material on the underside of the floor framing member which complies with section 302.14.

Exceptions:

1. *Floor assemblies located directly over a space protected by an automatic sprinkler system designed and installed in accordance with Sections 313.1.1 or 313.2.1.*

2. *Floor assemblies located directly over an underfloor space as referenced in section 408 which is not intended for storage or fuel-fired appliances.*

3. *Portions of floor assemblies can be unprotected when complying with the following:*

   3.1 The aggregate area of the unprotected portions shall not exceed 80 square feet per story.

   3.2 Fire blocking in accordance with Section 302.11.1 shall be installed along the perimeter of the unprotected portion to separate the unprotected portion from the remainder of the floor assembly.

4. *Wood floor assemblies using dimension lumber or structural composite lumber equal to or greater than 2-inch by 10-inch nominal dimension, or other approved floor assemblies demonstrating equivalent fire performance.*

SECTION 503
FLOOR SHEATHING

503.1 Lumber sheathing. Maximum allowable spans for lumber used as floor sheathing shall conform to Tables 503.1, 503.2.1.1(1) and 503.2.1.1(2).

503.1.1 End joints. End joints in lumber used as subflooring shall occur over supports unless end-matched lumber is used, in which case each piece shall bear on at least two joists. Subflooring may be omitted when joist spacing does not exceed 16 inches (406 mm) and a 1-inch (25.4 mm) nominal tongue-and-groove wood strip flooring is applied perpendicular to the joists.

TABLE 503.1
MINIMUM THICKNESS OF LUMBER FLOOR SHEATHING

JOIST OR BEAM SPACING (inches)	MINIMUM NET THICKNESS	
	Perpendicular to joist	Diagonal to joist
24	11/16	¾
16	5/8	5/8
48[a]	1½ T & G	N/A
54[b]		
60[c]		

For SI: 1 inch = 25.4 mm, 1 pound per square inch = 6.895kPa.

a. For this support spacing, lumber sheathing shall have a minimum F_b of 675 and minimum E of 1,100,000 (see AF&PA/NDS).

b. For this support spacing, lumber sheathing shall have a minimum F_b of 765 and minimum E of 1,400,000 (see AF&PA/NDS).

c. For this support spacing, lumber sheathing shall have a minimum F_b of 855 and minimum E of 1,700,000 (see AF&PA/NDS).

503.2 Wood structural panel sheathing.

503.2.1 Identification and grade. Wood structural panel sheathing used for structural purposes shall conform to DOC PS 1, DOC PS 2 or, when manufactured in Canada, CSA O437 or CSA O325. All panels shall be identified by a grade mark of certificate or inspection issued by an approved agency.

503.2.1.1 Subfloor and combined subfloor underlayment. Where used as subflooring or combination subfloor underlayment, wood structural panels shall be of one of the grades specified in Table 503.2.1.1(1). When sanded plywood is used as combination subfloor underlayment, the grade shall be as specified in Table 503.2.1.1(2).

TABLE 503.2.1.1(1)
ALLOWABLE SPANS AND LOADS FOR WOOD STRUCTURAL PANELS FOR ROOF AND SUBFLOOR SHEATHING AND COMBINATION SUBFLOOR UNDERLAYMENT[a, b, c]

SPAN RATING	MINIMUM NOMINAL PANEL THICKNESS (inch)	ALLOWABLE LIVE LOAD (psf)[h, l]		MAXIMUM SPAN (inches)		LOAD (pounds per square foot, at maximum span)		MAXIMUM SPAN (inches)
		SPAN @ 16" o.c.	SPAN @ 24 " o.c.	With edge support[d]	Without edge support	Total load	Live load	
Sheathing[e]				**Roof[f]**				**Subfloor[j]**
16/0	3/8	30	—	16	16	40	30	0
20/0	3/8	50	—	20	20	40	30	0
24/0	3/8	100	30	24	20g	40	30	0
24/16	7/16	100	40	24	24	50	40	16
32/16	15/32, ½	180	70	32	28	40	30	16[h]
40/20	19/32, 5/8	305	130	40	32	40	30	20[h, i]
48/24	23/32, 3/4	—	175	48	36	45	35	24
60/32	7/8	—	305	60	48	45	35	32
Underlayment, C-C plugged, single floor[e]				**Roof[f]**				**Combination subfloor underlayment[k]**
16 o.c.	19/32, 5/8	100	40	24	24	50	40	16[i]
20 o.c.	19/32, 5/8	150	60	32	32	40	30	20[i, j]
24 o.c.	23/32, 3/4	240	100	48	36	35	25	24
32 o.c.	7/8	—	185	48	40	50	40	32
48 o.c.	13/32, 1 1/8	—	290	60	48	50	40	48

For SI: 1 inch = 25.4 mm, 1 pound per square foot = 0.0479kPa.

a. The allowable total loads were determined using a dead load of 10 psf. If the dead load exceeds 10 psf, then the live load shall be reduced accordingly.

b. Panels continuous over two or more spans with long dimension (strength axis) perpendicular to supports. Spans shall be limited to values shown because of possible effect of concentrated loads.

c. Applies to panels 24 inches or wider.

d. Lumber blocking, panel edge clips (one midway between each support, except two equally spaced between supports when span is 48 inches), tongue-and-groove panel edges, or other approved type of edge support.

e. Includes Structural 1 panels in these grades.

f. Uniform load deflection limitation: 1/180 of span under live load plus dead load, 1/240 of span under live load only.

g. Maximum span 24 inches for 15/32-and ½-inch panels.

h. Maximum span 24 inches where ¾-inch wood finish flooring is installed at right angles to joists.

i. Maximum span 24 inches where 1.5 inches of lightweight concrete or approved cellular concrete is placed over the subfloor.
j. Unsupported edges shall have tongue-and-groove joints or shall be supported with blocking unless minimum nominal ¼-inch thick underlayment with end and edge joints offset at least 2 inches or 1.5 inches of lightweight concrete or approved cellular concrete is placed over the subfloor, or ¾-inch wood finish flooring is installed at right angles to the supports. Allowable uniform live load at maximum span, based on deflection of $^{1}/_{360}$ of span, is 100 psf.
k. Unsupported edges shall have tongue-and-groove joints or shall be supported by blocking unless nominal ¼-inch-thick underlayment with end and edge joints offset at least 2 inches or ¾-inch wood finish flooring is installed at right angles to the supports. Allowable uniform live load at maximum span, based on deflection of $^{1}/_{360}$ of span, is 100 psf, except panels with a span rating of 48 on center are limited to 65 psf total uniform load at maximum span.
l. Allowable live load values at spans of 16" o.c. and 24" o.c taken from reference standard APA E30, APA Engineered Wood Construction Guide. Refer to reference standard for allowable spans not listed in the table.

TABLE 503.2.1.1(2)
ALLOWABLE SPANS FOR SANDED PLYWOOD COMBINATION SUBFLOOR UNDERLAYMENT[a]

IDENTIFICATION	SPACING OF JOISTS (inches)		
	16	20	24
Species group[b]	—	—	—
1	½	$^{5}/_{8}$	¾
2, 3	$^{5}/_{8}$	¾	$^{7}/_{8}$
4	¾	$^{7}/_{8}$	1

For SI: 1 inch = 25.4 mm, 1 pound per square foot = 0.0479 kPa.
a. Plywood continuous over two or more spans and face grain perpendicular to supports. Unsupported edges shall be tongue-and-groove or blocked except where nominal ¼-inch-thick underlayment or ¾-inch wood finish floor is used. Allowable uniform live load at maximum span based on deflection of $^{1}/_{360}$ of span is 100 psf.
b. Applicable to all grades of sanded exterior-type plywood.

503.2.2 Allowable spans. The maximum allowable span for wood structural panels used as subfloor or combination subfloor underlayment shall be as set forth in Table 503.2.1.1(1), or APA E30. The maximum span for sanded plywood combination subfloor underlayment shall be as set forth in Table 503.2.1.1(2).

503.2.3 Installation. Wood structural panels used as subfloor or combination subfloor underlayment shall be attached to wood framing in accordance with Table 602.3(1) and shall be attached to cold-formed steel framing in accordance with Table 505.3.1(2).

503.3 Particleboard.

503.3.1 Identification and grade. Particleboard shall conform to ANSI A208.1 and shall be so identified by a grade mark or certificate of inspection issued by an approved agency.

503.3.2 Floor underlayment. Particleboard floor underlayment shall conform to Type PBU and shall not be less than ¼ inch (6.4 mm) in thickness.

503.3.3 Installation. Particleboard underlayment shall be installed in accordance with the recommendations of the manufacturer and attached to framing in accordance with Table 602.3(1).

SECTION 504
PRESSURE PRESERVATIVELY TREATED-WOOD FLOORS (ON GROUND)

504.1 General. Pressure preservatively treated-wood basement floors and floors on ground shall be designed to withstand axial forces and bending moments resulting from lateral soil pressures at the base of the exterior walls and floor live and dead loads. Floor framing shall be designed to meet joist deflection requirements in accordance with Section 301.

504.1.1 Unbalanced soil loads. Unless special provision is made to resist sliding caused by unbalanced lateral soil loads, wood basement floors shall be limited to applications where the differential depth of fill on opposite exterior foundation walls is 2 feet (610 mm) or less.

504.1.2 Construction. Joists in wood basement floors shall bear tightly against the narrow face of studs in the foundation wall or directly against a band joist that bears on the studs. Plywood subfloor shall be continuous over lapped joists or over butt joints between in-line joists. Sufficient blocking shall be provided between joists to transfer lateral forces at the base of the end walls into the floor system.

504.1.3 Uplift and buckling. Where required, resistance to uplift or restraint against buckling shall be provided by interior bearing walls or properly designed stub walls anchored in the supporting soil below.

504.2 Site preparation. The area within the foundation walls shall have all vegetation, topsoil and foreign material removed, and any fill material that is added shall be free of vegetation and foreign material. The fill shall be compacted to assure uniform support of the pressure preservatively treated-wood floor sleepers.

504.2.1 Base. A minimum 4-inch-thick (102 mm) granular base of gravel having a maximum size of ¾ inch (19.1 mm) or crushed stone having a maximum size of ½ inch (12.7 mm) shall be placed over the compacted earth.

504.2.2 Moisture barrier. Polyethylene sheeting of minimum 6-mil (0.15 mm) thickness shall be placed over the granular base. Joints shall be lapped 6 inches (152 mm) and left unsealed. The polyethylene membrane shall be placed over the pressure preservatively treated-wood sleepers and shall not extend beneath the footing plates of the exterior walls.

504.3 Materials. All framing materials, including sleepers, joists, blocking and plywood subflooring, shall be pressure-preservative treated and dried after treatment in accordance with AWPA U1 (Commodity Specification A, Use Category 4B and section 5.2), and shall bear the label of an *approved* agency.

SECTION 505
STEEL FLOOR FRAMING

505.1 Cold-formed steel floor framing. Elements shall be straight and free of any defects that would significantly affect structural performance. Cold-formed steel floor framing members shall comply with the requirements of this section.

505.1.1 Applicability limits. The provisions of this section shall control the construction of cold-formed steel floor framing for buildings not greater than 60 feet (18 288 mm) in length perpendicular to the joist span, not greater than 40 feet (12 192 mm) in width parallel to the joist span, and less than or equal to three stories above grade plane. Cold-formed steel floor framing constructed in accordance with the provisions of this section shall be limited to sites subjected to a maximum design wind speed of 110 miles per hour (49 m/s), Exposure B or C, and a maximum ground snow load of 70 pounds per square foot (3.35 kPa).

505.1.2 In-line framing. When supported by cold-formed steel framed walls in accordance with Section 603, cold-formed steel floor framing shall be constructed with floor joists located in-line with load-bearing studs located below the joists in accordance with Figure 505.1.2 and the tolerances specified as follows:

1. The maximum tolerance shall be ¾ inch (19.1 mm) between the centerline of the horizontal framing member and the centerline of the vertical framing member.

2. Where the centerline of the horizontal framing member and bearing stiffener are located to one side of the centerline of the vertical framing member, the maximum tolerance shall be $^{1}/_{8}$ inch (3 mm) between the web of the horizontal framing member and the edge of the vertical framing member.

505.1.3 Floor trusses. Cold-formed steel trusses shall be designed, braced and installed in accordance with AISI S100, Section D4. Truss members shall not be notched, cut or altered in any manner without an approved design.

505.2 Structural framing. Load-bearing cold-formed steel floor framing members shall comply with Figure 505.2(1) and with the dimensional and minimum thickness requirements specified in Tables 505.2(1) and 505.2(2). Tracks shall comply with Figure 505.2(2) and shall have a minimum flange width of 1¼ inches (32 mm). The maximum inside bend radius for members shall be the greater of $^{3}/_{32}$ inch (2.4 mm) minus half the base steel thickness or 1.5 times the base steel thickness.

505.2.1 Material. Load-bearing cold-formed steel framing members shall be cold-formed to shape from structural quality sheet steel complying with the requirements of one of the following:

1. ASTM A 653: Grades 33 and 50 (Class 1 and 3).

2. ASTM A 792: Grades 33 and 50A.

3. ASTM A 1003: Structural Grades 33 Type H and 50 Type H.

505.2.2 Identification. Load-bearing cold-formed steel framing members shall have a legible label, stencil, stamp or embossment with the following information as a minimum:

1. Manufacturer's identification.

2. Minimum base steel thickness in inches (mm).

3. Minimum coating designation.

4. Minimum yield strength, in kips per square inch (ksi) (MPa).

505.2.3 Corrosion protection. Load-bearing cold-formed steel framing shall have a metallic coating complying with ASTM A 1003 and one of the following:

1. A minimum of G 60 in accordance with ASTM A 653.

2. A minimum of AZ 50 in accordance with ASTM A 792.

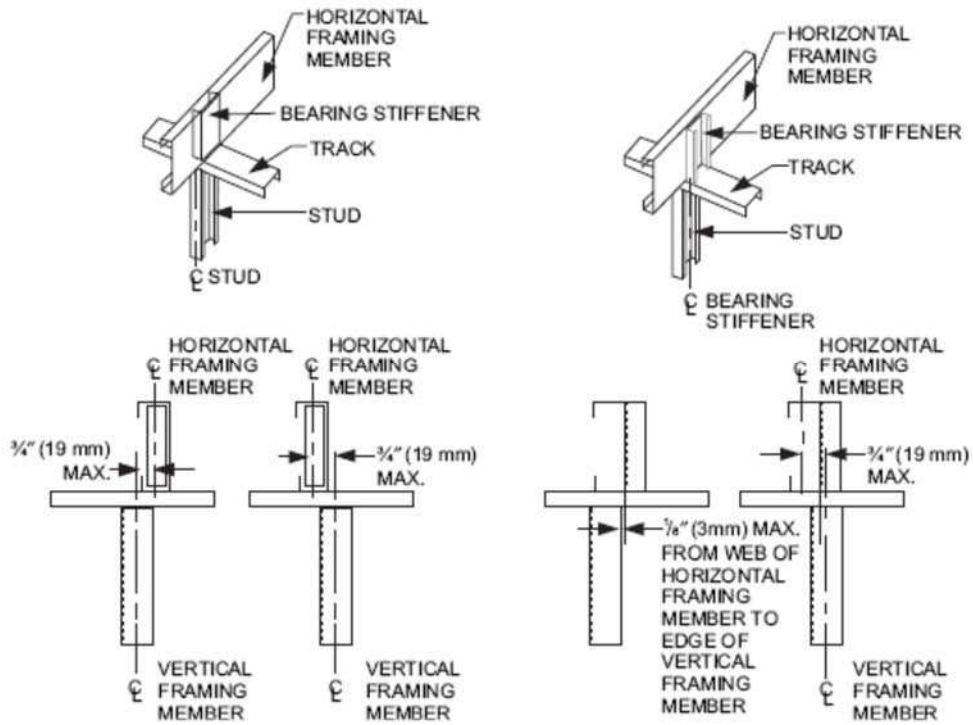

For SI: 1 inch = 25.4 mm.

FIGURE 505.1.2
IN-LINE FRAMING

FIGURE 505.2(1) C-SHAPED SECTION

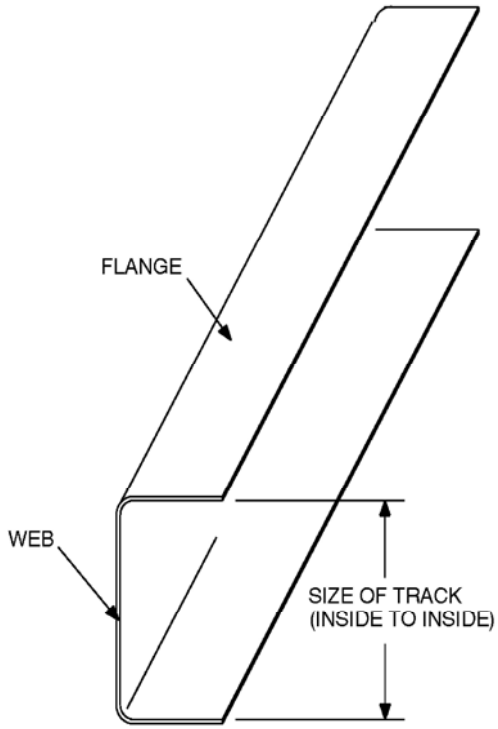

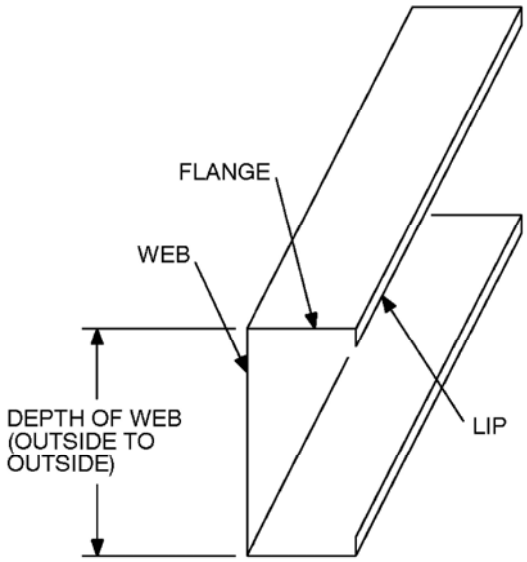

FIGURE 505.2(2) TRACK SECTION

TABLE 505.2(1)
COLD-FORMED STEEL JOIST SIZES

MEMBER DESIGNATION[a]	WEB DEPTH (inches)	MINIMUM FLANGE WIDTH (inches)	MAXIMUM FLANGE WIDTH (inches)	MINIMUM LIP SIZE (inches)
550S162-t	5.5	1.625	2	0.5
800S162-t	8	1.625	2	0.5
1000S162-t	10	1.625	2	0.5
1200S162-t	12	1.625	2	0.5

For SI: 1 inch = 25.4 mm, 1 mil = 0.0254 mm.

a. The member designation is defined by the first number representing the member depth in 0.01 inch, the letter "S" representing a stud or joist member, the second number representing the flange width in 0.01 inch, and the letter "t" shall be a number representing the minimum base metal thickness in mils [See Table 505.2(2)].

TABLE 505.2(2)
MINIMUM THICKNESS OF COLD-FORMED STEEL MEMBERS

DESIGNATION THICKNESS (mils)	MINIMUM BASE STEEL THICKNESS (inches)
33	0.0329
43	0.0428
54	0.0538
68	0.0677
97	0.0966

For SI: 1 inch = 25.4 mm, 1 mil = 0.0254 mm.

505.2.4 Fastening requirements. Screws for steel-to-steel connections shall be installed with a minimum edge distance and center-to-center spacing of ½ inch (12.7 mm), shall be self-drilling tapping, and shall conform to ASTM C 1513. Floor sheathing shall be attached to cold-formed steel joists with minimum No. 8 self-drilling tapping screws that conform to ASTM C 1513. Screws attaching floor-sheathing to cold-formed steel joists shall have a minimum head diameter of 0.292 inch (7.4 mm) with countersunk heads and shall be installed with a minimum edge distance of $^{3}/_{8}$ inch (9.5 mm). Gypsum board ceilings shall be attached to cold-formed steel joists with minimum No. 6 screws conforming to ASTM C 954 or ASTM C 1513 with a bugle head style and shall be installed in accordance with Section 702. For all connections, screws shall extend through the steel a minimum of three exposed threads. All fasteners shall have rust inhibitive coating suitable for the installation in which they are being used, or be manufactured from material not susceptible to corrosion.

Where No. 8 screws are specified in a steel-to-steel connection, the required number of screws in the connection is permitted to be reduced in accordance with the reduction factors in Table 505.2.4 when larger screws are used or when one of the sheets of steel being connected is thicker than 33 mils (0.84 mm). When applying the reduction factor, the resulting number of screws shall be rounded up.

TABLE 505.2.4
SCREW SUBSTITUTION FACTOR

SCREW SIZE	THINNEST CONNECTED STEEL SHEET (mils)	
	33	43
#8	1.0	0.67
#10	0.93	0.62
#12	0.86	0.56

For SI: 1 mil = 0.0254 mm.

505.2.5 Web holes, web hole reinforcing and web hole patching. Web holes, web hole reinforcing, and web hole patching shall be in accordance with this section.

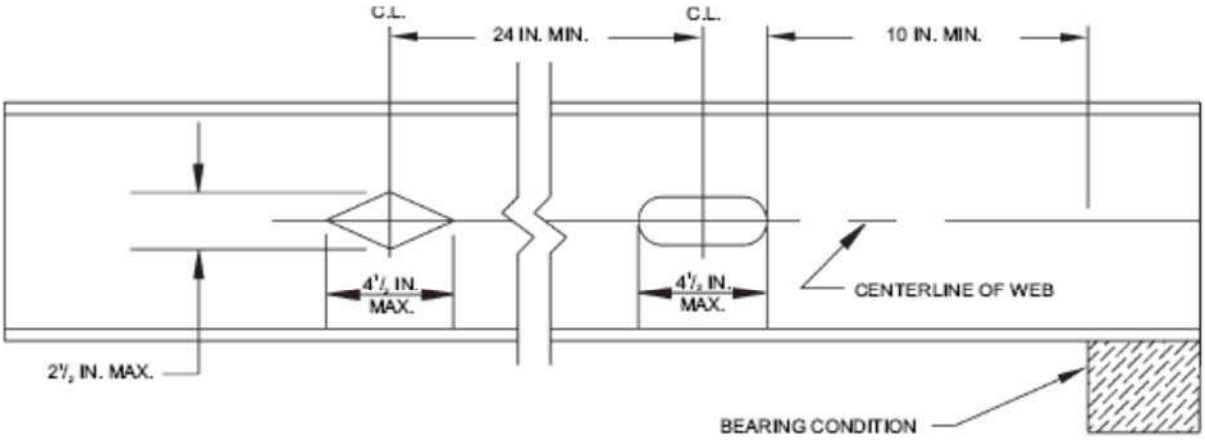

For SI: 1 inch = 25.4 mm.

FIGURE R505.2.5.1
FLOOR JOIST WEB HOLES

505.2.5.1 Web holes. Web holes in floor joists shall comply with all of the following conditions:

1. Holes shall conform to Figure 505.2.5.1;

2. Holes shall be permitted only along the centerline of the web of the framing member;

3. Holes shall have a center-to-center spacing of not less than 24 inches (610 mm);

4. Holes shall have a web hole width not greater than 0.5 times the member depth, or 2½ inches (64.5 mm);

5. Holes shall have a web hole length not exceeding 4½ inches (114 mm); and

6. Holes shall have a minimum distance between the edge of the bearing surface and the edge of the web hole of not less than 10 inches (254 mm).

Framing members with web holes not conforming to the above requirements shall be reinforced in accordance with Section 505.2.5.2, patched in accordance with Section 505.2.5.3 or designed in accordance with accepted engineering practices.

505.2.5.2 Web hole reinforcing. Reinforcement of web holes in floor joists not conforming to the requirements of Section 505.2.5.1 shall be permitted if the hole is located fully within the center 40 percent of the span and the depth and length of the hole does not exceed 65 percent of the flat width of the web. The reinforcing shall be a steel plate or C-shape section with a hole that does not exceed the web hole size limitations of Section 505.2.5.1 for the member being reinforced. The steel reinforcing shall be the same thickness as the receiving member and shall extend at least 1 inch (25.4 mm) beyond all edges of the hole. The steel reinforcing shall be fastened to the web of the receiving member with No.8 screws spaced no more than 1 inch (25.4 mm) center-to-center along the edges of the patch with minimum edge distance of ½ inch (12.7 mm).

505.2.5.3 Hole patching. Patching of web holes in floor joists not conforming to the requirements in Section 505.2.5.1 shall be permitted in accordance with either of the following methods:

1. Framing members shall be replaced or designed in accordance with accepted engineering practices where web holes exceed the following size limits:

1.1 The depth of the hole, measured across the web, exceeds 70 percent of the flat width of the web; or

1.2 The length of the hole measured along the web, exceeds 10 inches (254 mm) or the depth of the web, whichever is greater.

2. Web holes not exceeding the dimensional requirements in Section 505.2.5.3, Item 1, shall be patched with a solid steel plate, stud section, or track section in accordance with Figure 505.2.5.3. The steel patch shall, as a minimum, be of the same thickness as the receiving member and shall extend at least 1 inch (25 mm) beyond all edges of the hole. The steel patch shall be fastened to the web of the receiving member with No.8 screws spaced no more than 1 inch (25 mm) center-to-center along the edges of the patch with minimum edge distance of ½ inch (13 mm).

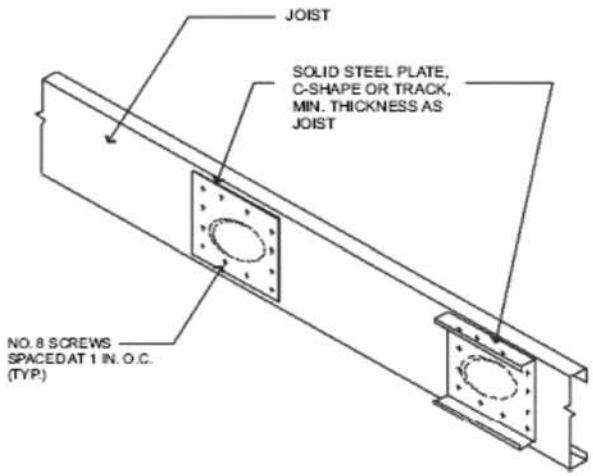

FIGURE 505.2.5.3
WEB HOLE PATCH

505.3 Floor construction. Cold-formed steel floors shall be constructed in accordance with this section.

505.3.1 Floor to foundation or load-bearing wall connections. Cold-formed steel framed floors shall be anchored to foundations, wood sills or load-bearing walls in accordance with Table 505.3.1(1) and Figure 505.3.1(1), 505.3.1(2),

505.3.1(3), 505.3.1(4), 505.3.1(5) or 505.3.1(6). Anchor bolts shall be located not more than 12 inches (305 mm) from corners or the termination of bottom tracks. Continuous cold-formed steel joists supported by interior load-bearing walls shall be constructed in accordance with Figure 505.3.1(7). Lapped cold-formed steel joists shall be constructed in accordance with Figure 505.3.1(8). End floor joists constructed on foundation walls parallel to the joist span shall be doubled unless a C-shaped bearing stiffener, sized in accordance with Section 505.3.4, is installed web-to-web with the floor joist beneath each supported wall stud, as shown in Figure 505.3.1(9). Fastening of cold-formed steel joists to other framing members shall be in accordance with Section 505.2.4 and Table 505.3.1(2).

505.3.2 Minimum floor joist sizes. Floor joist size and thickness shall be determined in accordance with the limits set forth in Table 505.3.2(1) for single spans, and Tables 505.3.2(2) and 505.3.2(3) for multiple spans. When continuous joist members are used, the interior bearing supports shall be located within 2 feet (610 mm) of mid-span of the cold-formed steel joists, and the individual spans shall not exceed the spans in Table 505.3.2(2) or 505.3.2(3), as applicable. Floor joists shall have a bearing support length of not less than 1½ inches (38 mm) for exterior wall supports and 3½ inches (89 mm) for interior wall supports. Tracks shall be a minimum of 33 mils (0.84 mm) thick except when used as part of a floor header or trimmer in accordance with Section 505.3.8. Bearing stiffeners shall be installed in accordance with Section 505.3.4.

505.3.3 Joist bracing and blocking. Joist bracing and blocking shall be in accordance with this section.

505.3.3.1 Joist top flange bracing. The top flanges of cold-formed steel joists shall be laterally braced by the application of floor sheathing fastened to the joists in accordance with Section 505.2.4 and Table 505.3.1(2).

505.3.3.2 Joist bottom flange bracing/blocking. Floor joists with spans that exceed 12 feet (3658 mm) shall have the bottom flanges laterally braced in accordance with one of the following:

1. Gypsum board installed with minimum No. 6 screws in accordance with Section 702.

2. Continuous steel straps installed in accordance with Figure 505.3.3.2(1). Steel straps shall be spaced at a maximum of 12 feet

(3658 mm) on center and shall be at least 1½ inches (38 mm) in width and 33 mils (0.84 mm) in thickness. Straps shall be fastened to the bottom flange of each joist with one No. 8 screw, fastened to blocking with two No. 8 screws, and fastened at each end (of strap) with two No. 8 screws. Blocking in accordance with Figure 505.3.3.2(1) or Figure 505.3.3.2(2) shall be installed between joists at each end of the continuous strapping and at a maximum spacing of 12 feet (3658 mm) measured along the continuous strapping (perpendicular to the joist run). Blocking shall also be located at the termination of all straps. As an alternative to blocking at the ends, anchoring the strap to a stable building component with two No. 8 screws shall be permitted.

TABLE 505.3.1(1)
FLOOR TO FOUNDATION OR BEARING WALL CONNECTION REQUIREMENTS[a, b]

FRAMING CONDITION	BASIC WIND SPEED (mph) AND EXPOSURE	
	85 mph Exposure C or less than 110 mph Exposure B	**Less than 110 mph Exposure C**
Floor joist to wall track of exterior wall per Figure 505.3.1(1)	2-No. 8 screws	3-No. 8 screws
Rim track or end joist to load-bearing wall top track per Figure 505.3.1(1)	1-No. 8 screw at 24 inches o.c.	1-No. 8 screw at 24 inches o.c.
Rim track or end joist to wood sill per Figure 505.3.1(2)	Steel plate spaced at 4 feet o.c. with 4-No. 8 screws and 4-10d or 6-8d common nails	Steel plate spaced at 2 feet o.c. with 4-No. 8 screws and 4-10d or 6-8d common nails
Rim track or end joist to foundation per Figure 505.3.1(3)	½ inch minimum diameter anchor bolt and clip angle spaced at 6 feet o.c. with 8-No. 8 screws	½ inch minimum diameter anchor bolt and clip angle spaced at 4 feet o.c. with 8-No. 8 screws
Cantilevered joist to foundation per Figure R505.3.1(4)	½ inch minimum diameter anchor bolt and clip angle spaced at 6 feet o.c. with 8-No. 8 screws	½ inch minimum diameter anchor bolt and clip angle spaced at 4 feet o.c. with 8-No. 8 screws
Cantilevered joist to wood sill per Figure 505.3.1(5)	Steel plate spaced at 4 feet o.c. with 4-No. 8 screws and 4-10d or 6-8d common nails	Steel plate spaced at 2 feet o.c. with 4-No. 8 screws and 4-10d or 6-8d common nails
Cantilevered joist to exterior load-bearing wall track per Figure 505.3.1(6)	2-No. 8 screws	3-No. 8 screws

For SI: 1 inch = 25.4 mm, 1 pound per square foot = 0.0479kPa, 1 mile per hour = 0.447 m/s, 1 foot = 304.8 mm.

a. Anchor bolts are to be located not more than 12 inches from corners or the termination of bottom tracks (e.g., at door openings or corners). Bolts extend a minimum of 15 inches into masonry or 7 inches into concrete. Anchor bolts connecting cold-formed steel framing to the foundation structure are to be installed so that the distance from the center of the bolt hole to the edge of the connected member is not less than one and one-half bolt diameters.

b. All screw sizes shown are minimum.

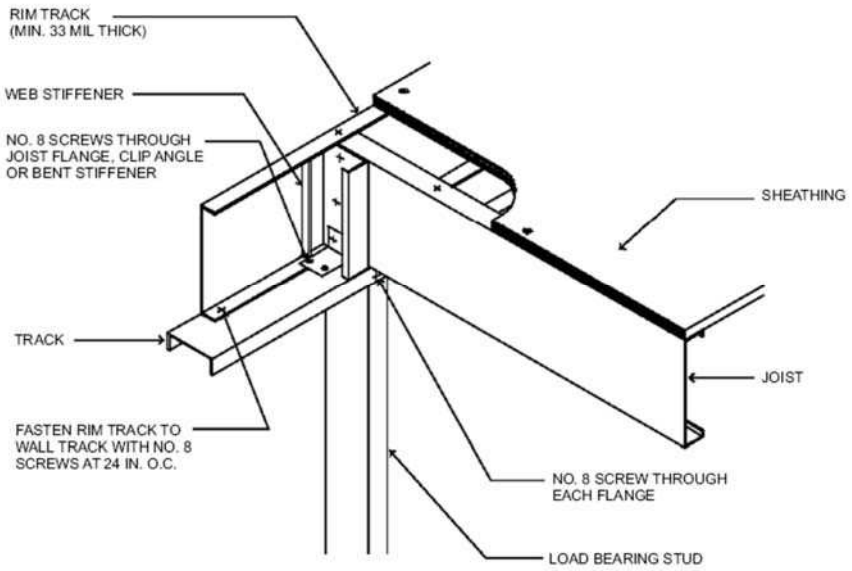

For SI: 1 mil = 0.0254 mm, 1 inch = 25.4 mm.

FIGURE 505.3.1(1)
FLOOR TO EXTERIOR LOAD-BEARING WALL STUD CONNECTION

TABLE 505.3.1(2)
FLOOR FASTENING SCHEDULE[a]

DESCRIPTION OF BUILDING ELEMENTS	NUMBER AND SIZE OF FASTENERS	SPACING OF FASTENERS
Floor joist to track of an interior load-bearing wall per Figures 505.3.1(7) and 505.3.1(8)	2 No. 8 screws	Each joist
Floor joist to track at end of joist	2 No. 8 screws	One per flange or two per bearing stiffener
Subfloor to floor joists	No. 8 screws	6 in. o.c. on edges and 12 in. o.c. at intermediate supports

For SI: 1 inch = 25.4 mm.
a. All screw sizes shown are minimum.

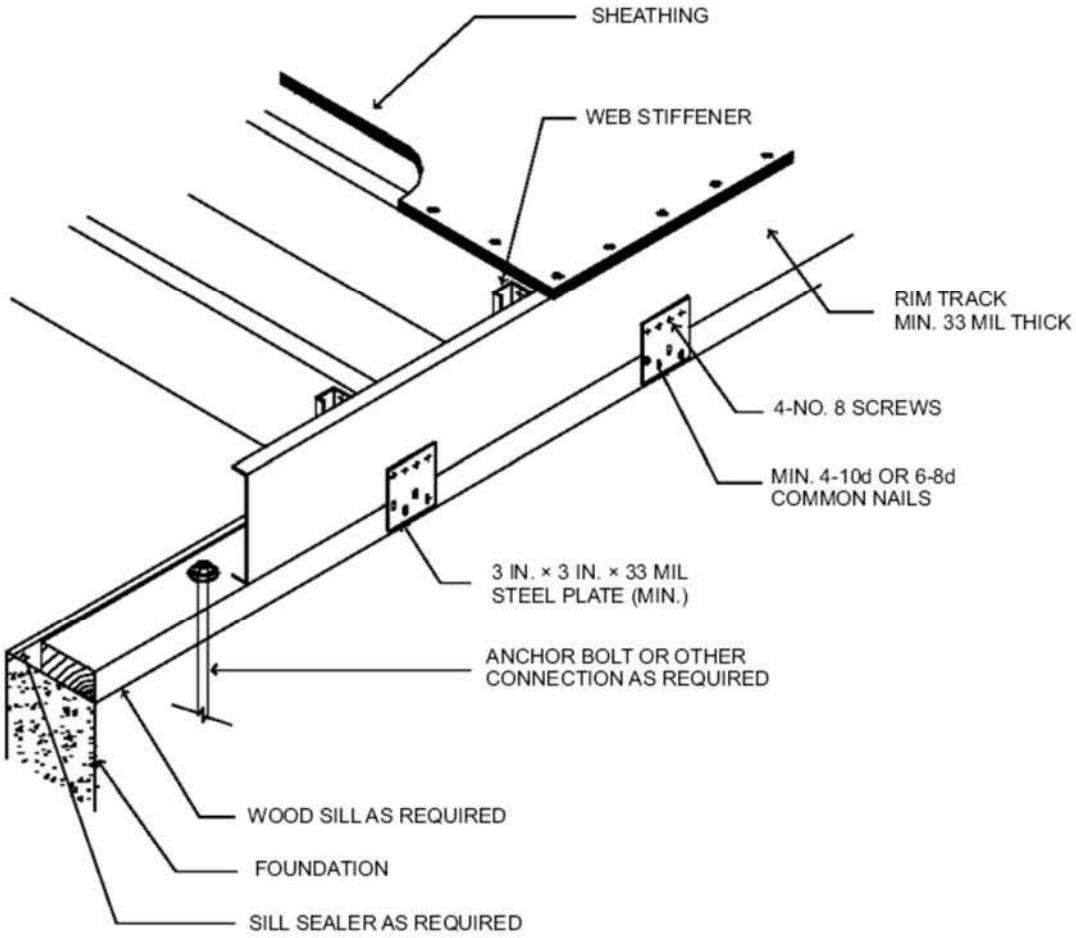

For SI: 1 mil = 0.0254 mm, 1 inch = 25.4 mm.

FIGURE 505.3.1(2)
FLOOR TO WOOD SILL CONNECTION

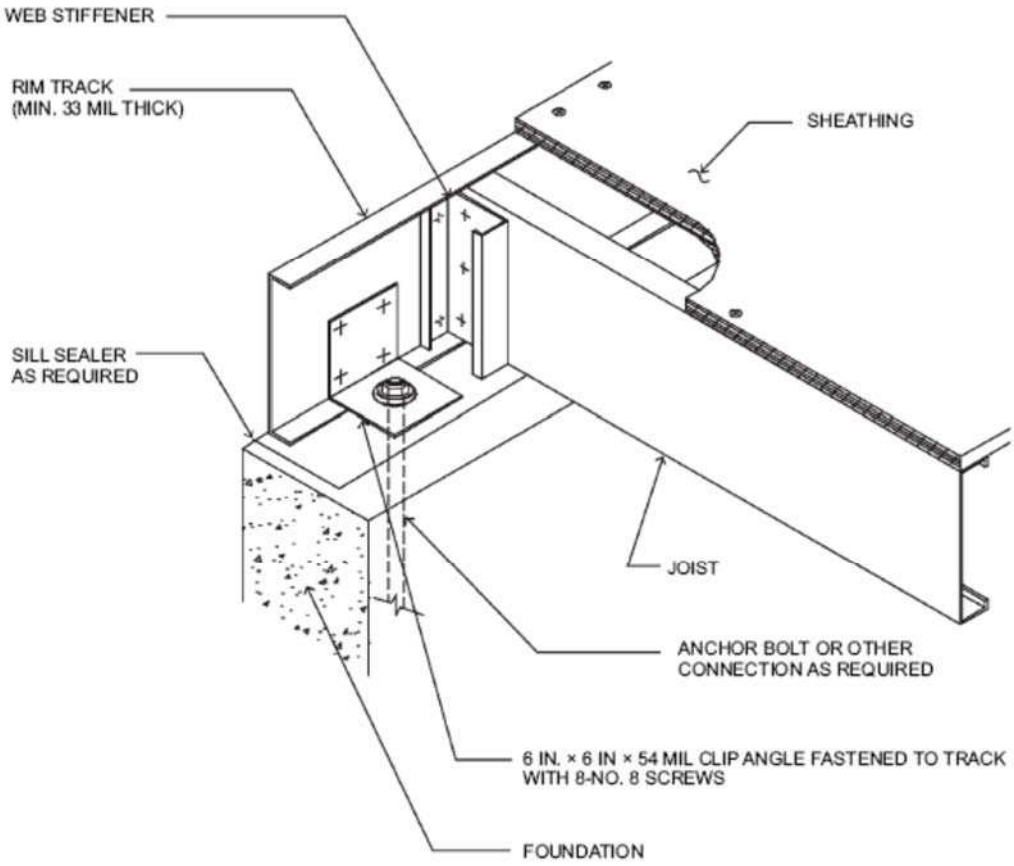

For SI: 1 mil = 0.0254 mm, 1 inch = 25.4 mm.

FIGURE 505.3.1(3)
FLOOR TO FOUNDATION CONNECTION

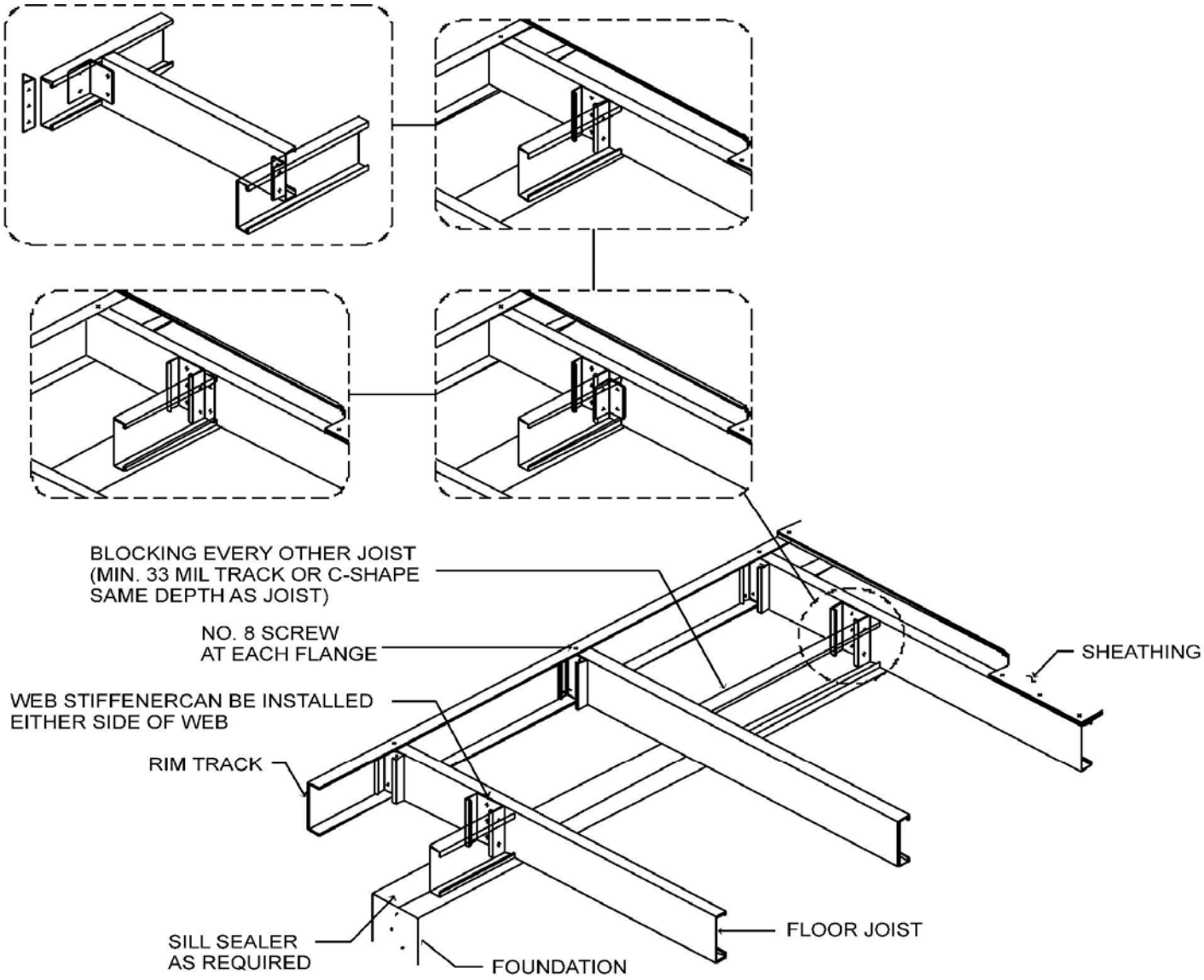

For SI: 1 mil = 0.0254 mm, 1 inch = 25.4 mm.

FIGURE 505.3.1(4)
CANTILEVERED FLOOR TO FOUNDATION CONNECTION

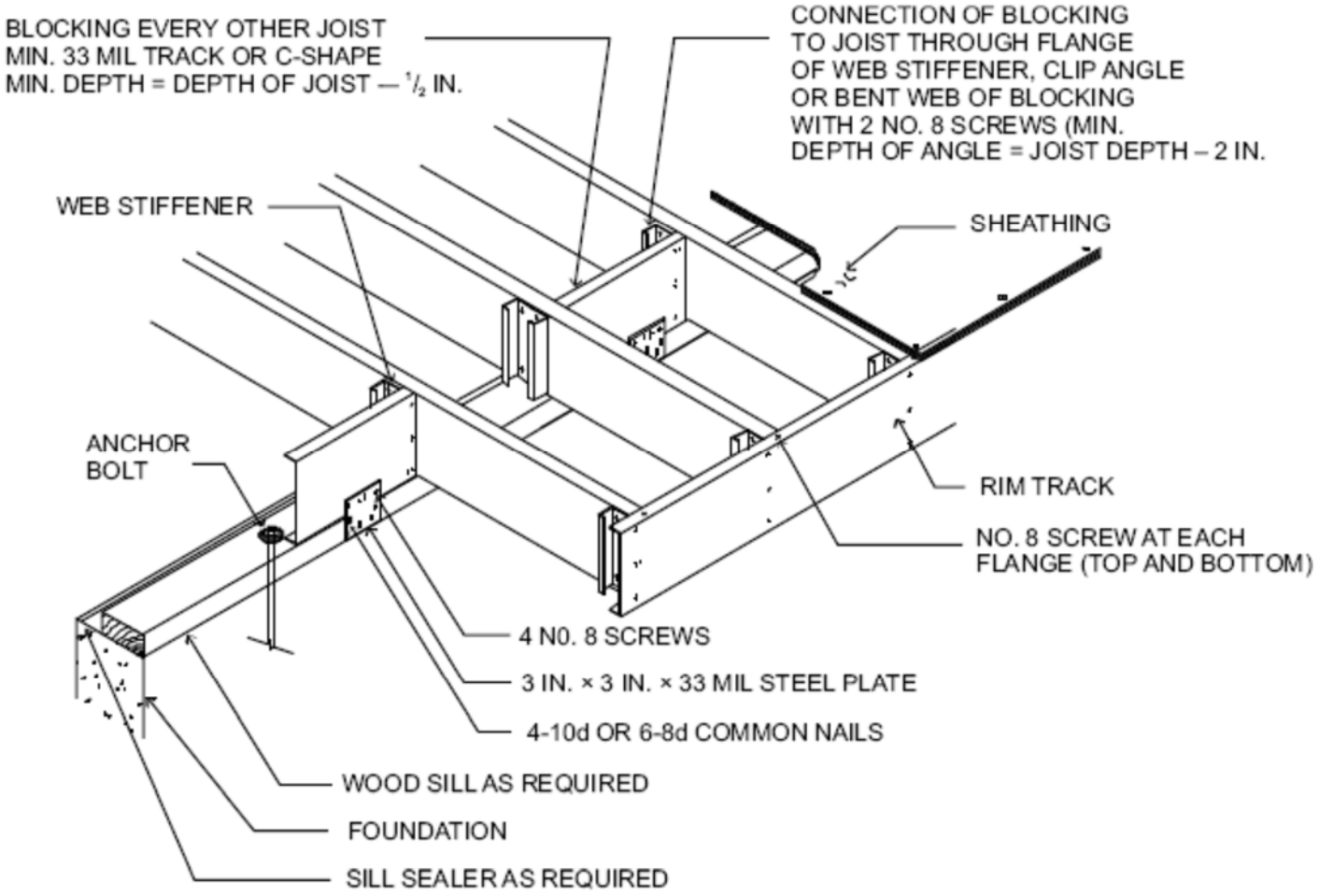

For SI: 1 mil = 0.0254 mm, 1 inch = 25.4 mm.

FIGURE 505.3.1(5)
CANTILEVERED FLOOR TO WOOD SILL CONNECTION

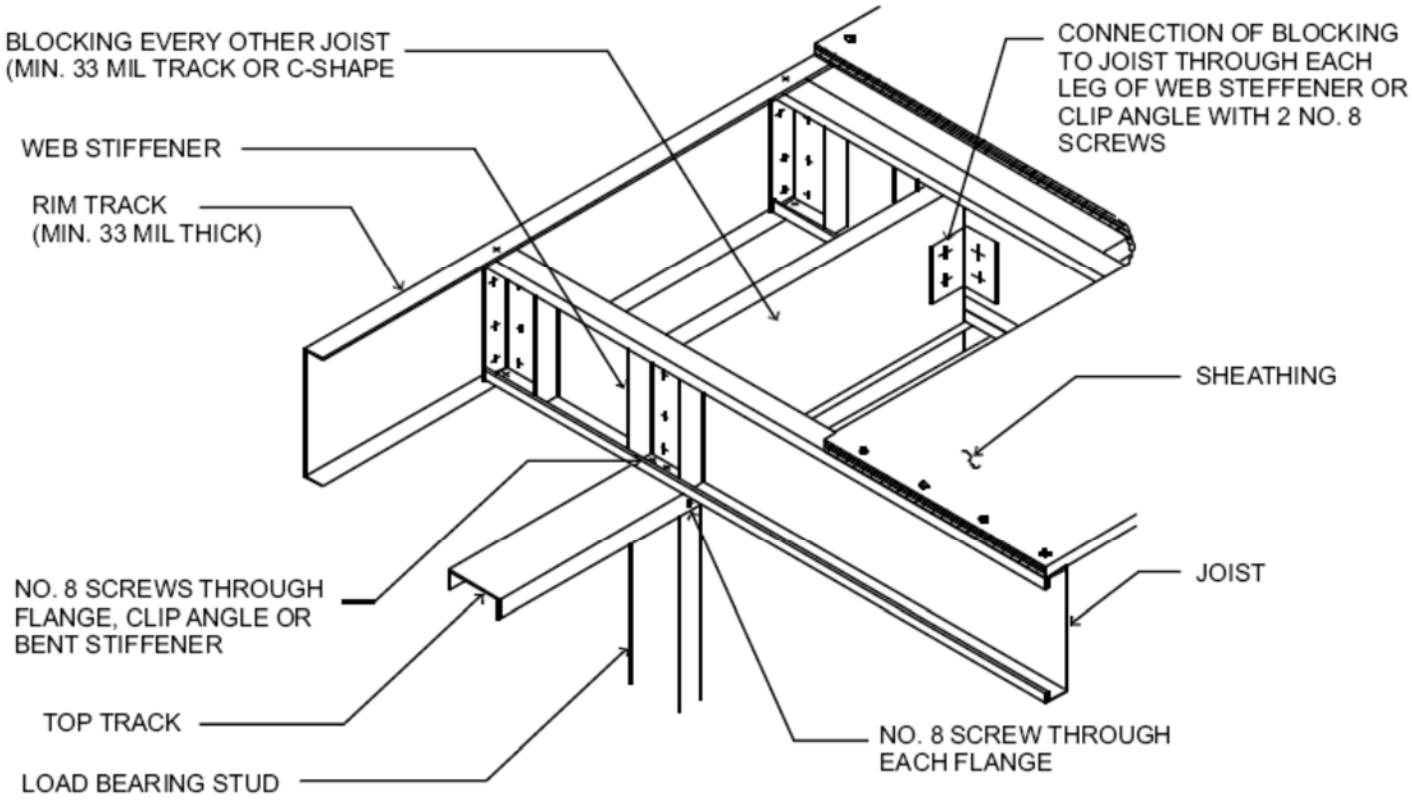

FIGURE 505.3.1(6)
CANTILEVERED FLOOR TO EXTERIOR LOAD-BEARING CONNECTION

For SI: 1 mil = 0.0254 mm, 1 inch = 25.4 mm.

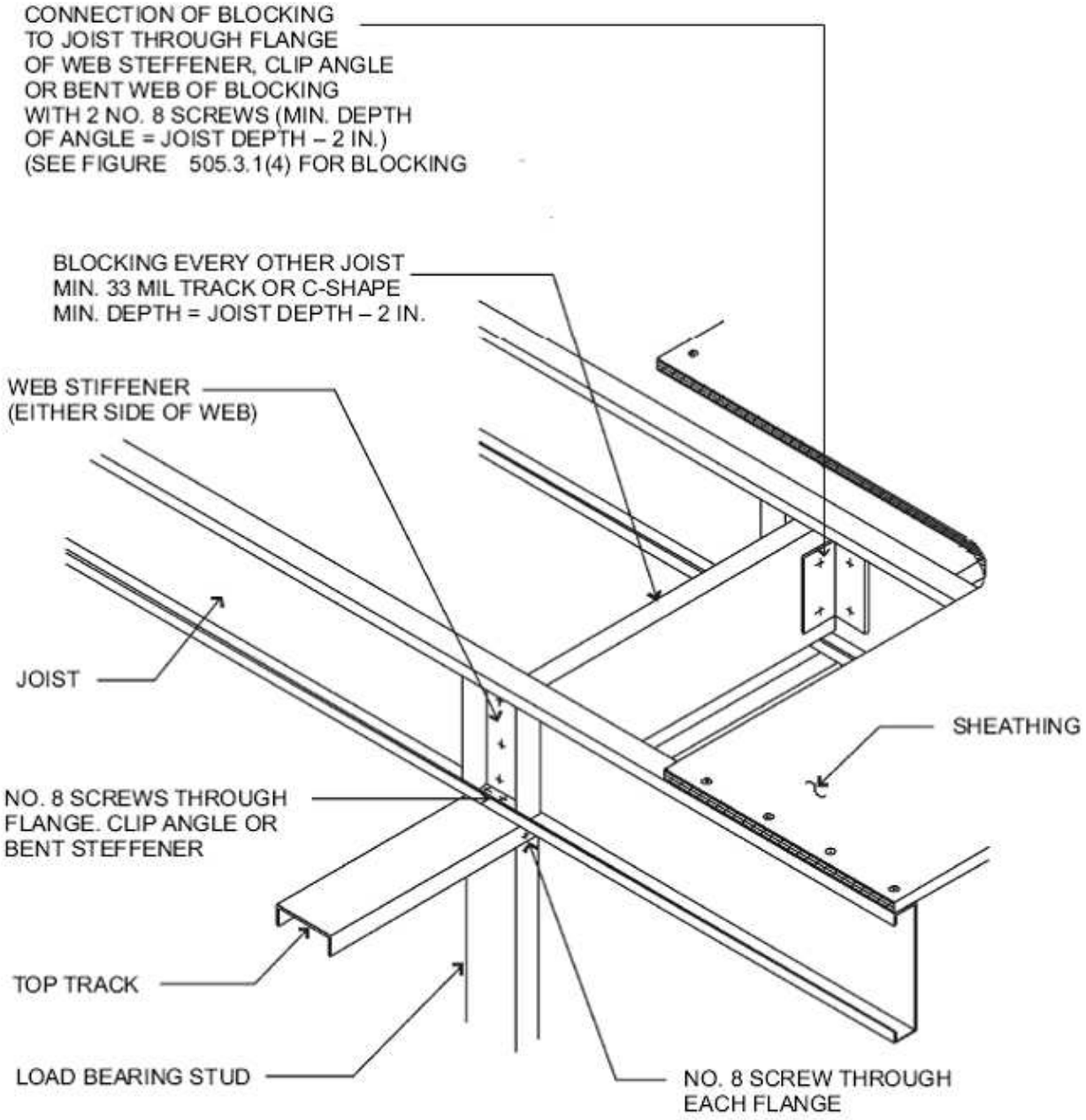

For SI: 1 mil = 0.0254 mm

FIGURE 505.3.1(7)
CONTINUOUS SPAN JOIST SUPPORTED ON INTERIOR LOAD-BEARING WALL

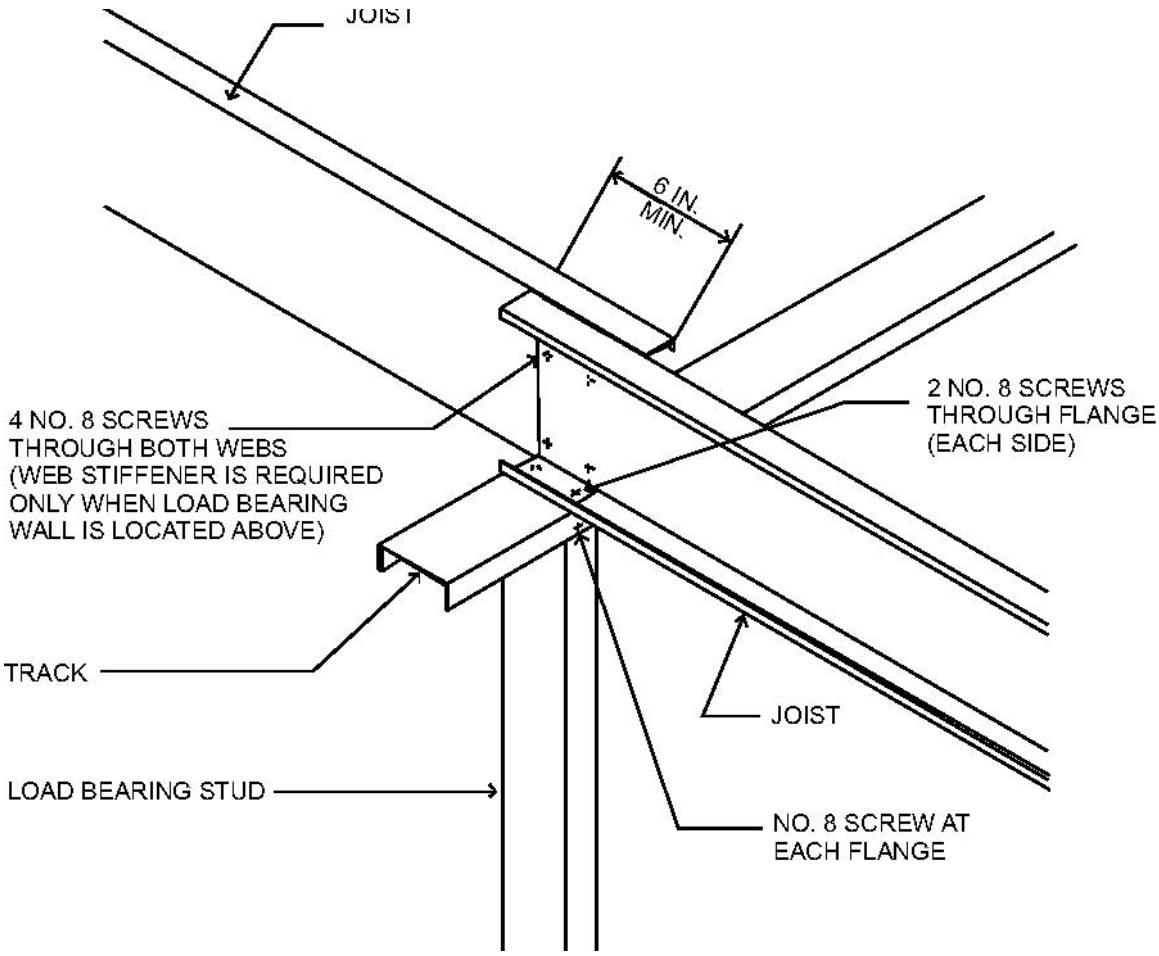

For SI: 1 inch = 25.4 mm.

FIGURE 505.3.1(8)
LAPPED JOISTS SUPPORTED ON INTERIOR LOAD-BEARING WALL

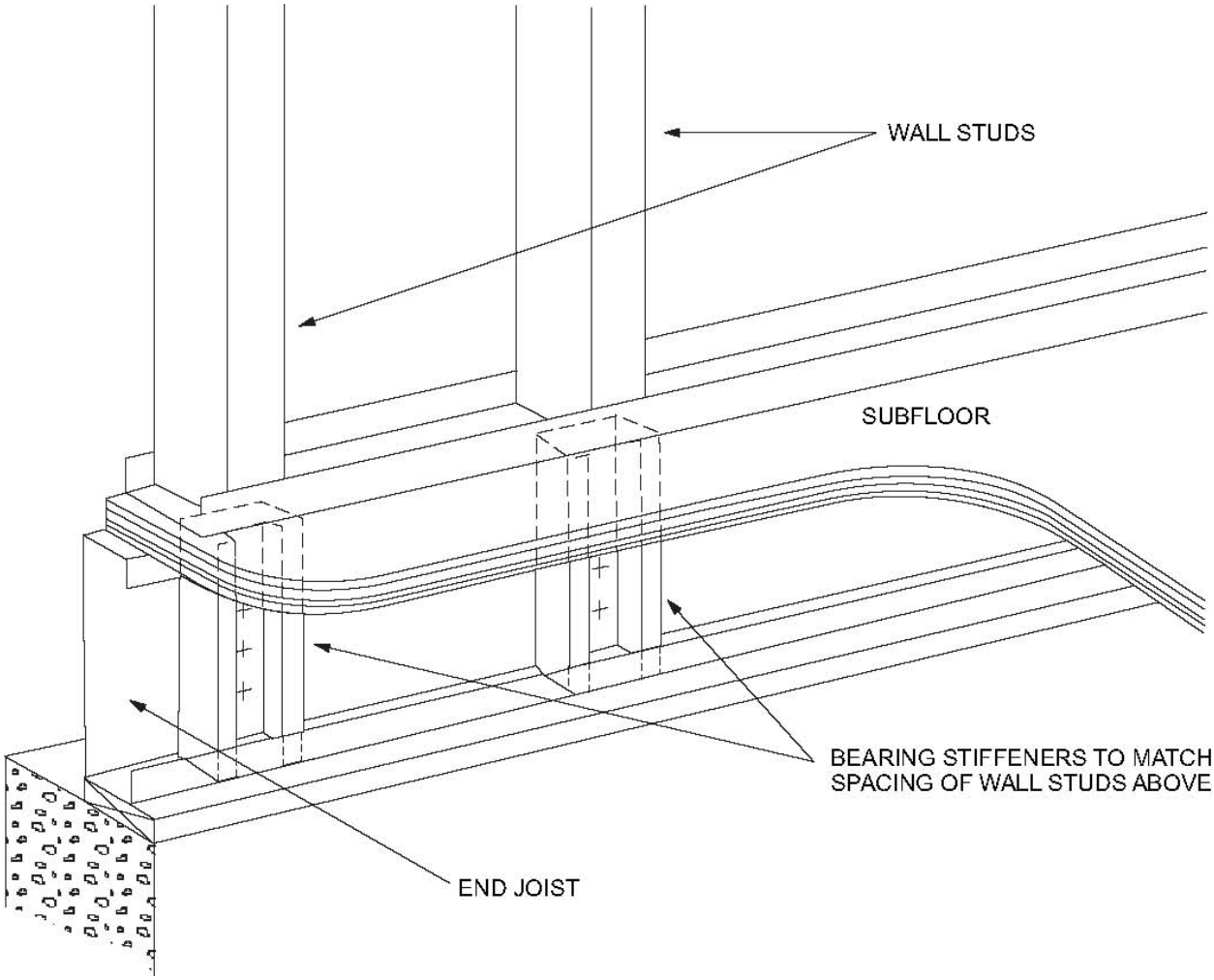

FIGURE 505.3.1(9)
BEARING STIFFENERS FOR END JOISTS

TABLE 505.3.2(1)
ALLOWABLE SPANS FOR COLD-FORMED STEEL JOISTS—SINGLE SPANS[a, b, c, d] 33 ksi STEEL

JOIST DESIGNATION	30 PSF LIVE LOAD				40 PSF LIVE LOAD			
	Spacing (inches)				Spacing (inches)			
	12	16	19.2	24	12	16	19.2	24
550S162-33	11′-7″	10′-7″	9′-6″	8′-6″	10′-7″	9′-3″	8′-6″	7′-6″
550S162-43	12′-8″	11′-6″	10′-10″	10′-2″	11′-6″	10′-5″	9′-10″	9′-1″
550S162-54	13′-7″	12′-4″	11′-7″	10′-9″	12′-4″	11′-2″	10′-6″	9′-9″
550S162-68	14′-7″	13′-3″	12′-6″	11′-7″	13′-3″	12′-0″	11′-4″	10′-6″
550S162-97	16′-2″	14′-9″	13′-10″	12′-10″	14′-9″	13′-4″	12′-7″	11′-8″

800S162-33	15′-8″	13′-11″	12′-9″	11′-5″	14′-3″	12′-5″	11′-3″	9′-0″
800S162-43	17′-1″	15′-6″	14′-7″	13′-7″	15′-6″	14′-1″	13′-3″	12′-4″
800S162-54	18′-4″	16′-8″	15′-8″	14′-7″	16′-8″	15′-2″	14′-3″	13′-3″
800S162-68	19′-9″	17′-11″	16′-10″	15′-8″	17′-11″	16′-3″	15′-4″	14′-2″
800S162-97	22′-0″	20′-0″	16′-10″	17′-5″	20′-0″	18′-2″	17′-1″	15′-10″
1000S162-43	20′-6″	18′-8″	17′-6″	15′-8″	18′-8″	16′-11″	15′-6″	13′-11″
1000S162-54	22′-1″	20′-0″	18′-10″	17′-6″	20′-0″	18′-2″	17′-2″	15′-11″
1000S162-68	23′- 9″	21′-7″	20′-3″	18′-10″	21′-7″	19′-7″	18′-5″	17′-1″
1000S162-97	26′-6″	24′-1″	22′-8″	21′-0″	24′-1″	21′-10″	20′-7″	19′-1″
1200S162-43	23′-9″	20′-10″	19′-0″	16′-8″	21′-5″	18′-6″	16′-6″	13′-2″
1200S162-54	25′-9″	23′-4″	22′-0″	20′-1″	23′-4″	21′-3″	20′-0″	17′-10″
1200S162-68	27′-8″	25′-1″	23′-8″	21′-11″	25′-1″	22′-10″	21′-6″	21′-1″
1200S162-97	30′-11″	28′-1″	26′-5″	24′-6″	28′-1″	25′-6″	24′-0″	22′-3″

For SI: 1 inch = 25.4 mm, 1 foot = 304.8 mm, 1 pound per square foot = 0.0479kPa.
a. Deflection criteria: *L*/480 for live loads, *L*/240 for total loads.
b. Floor dead load = 10 psf.
c. Table provides the maximum clear span in feet and inches.
d. Bearing stiffeners are to be installed at all support points and concentrated loads.

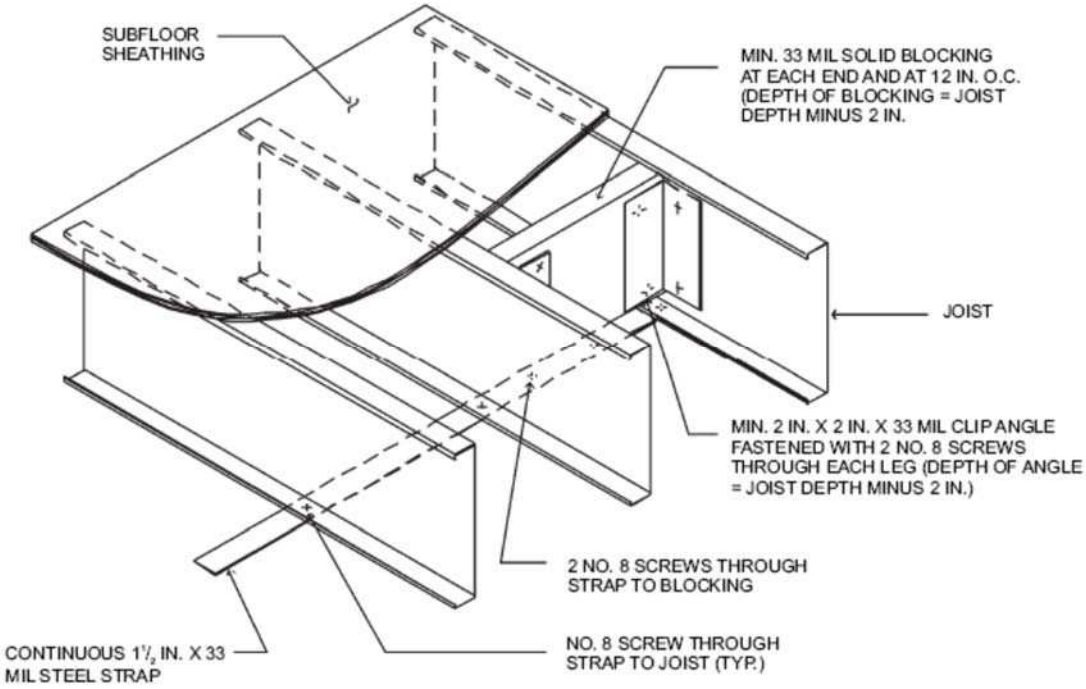

For SI: 1 mil = 0.0254 mm, 1 inch = 25.4 mm.

FIGURE 505.3.3.2(1)
JOIST BLOCKING (SOLID)

TABLE 505.3.2(2)
ALLOWABLE SPANS FOR COLD-FORMED STEEL JOISTS—MULTIPLE SPANS[a, b, c, d, e, f] 33 ksi STEEL

JOIST DESIGNATION	30 PSF LIVE LOAD				40 PSF LIVE LOAD			
	Spacing (inches)				Spacing (inches)			
	12	16	19.2	24	12	16	19.2	24
550S162-33	12′-1″	10′-5″	9′-6″	8′-6″	10′-9″	9′-3″	8′-6″	7′-6″
550S162-43	14′-5″	12′-5″	11′-4″	10′-2″	12′-9″	11′-11″	10′-1″	9′-0″
550S162-54	16′-3″	14′-1″	12′-10″	11′-6″	14′-5″	12′-6″	11′-5″	10′-2″
550S162-68	19′-7″	17′-9″	16′-9″	15′-6″	17′-9″	16′-2″	15′-2″	14′-1″
550S162-97	21′-9″	19′-9″	18′-7″	17′-3″	19′-9″	17′-11″	16′-10″	15′-4″
800S162-33	14′-8″	11′-10″	10′-4″	8′-8″	12′-4″	9′-11″	8′-7″	7′-2″
800S162-43	20′-0″	17′-4″	15′-9″	14′-1″	17′-9″	15′-4″	14′-0″	12′-0″
800S162-54	23′-7″	20′-5″	18′-8″	16′-8″	21′-0″	18′-2″	16′-7″	14′-10″
800S162-68	26′-5″	23′-1″	21′-0″	18′-10″	23′-8″	20′-6″	18′-8″	16′-9″
800S162-97	29′-6″	26′-10″	25′-3″	22′-8″	26′-10″	24′-4″	22′-6″	20′-2″
1000S162-43	22′-2″	18′-3″	16′-0″	13′-7″	18′-11″	15′-5″	13′-6″	11′-5″
1000S162-54	26′-2″	22′-8″	20′-8″	18′-6″	23′-3″	20′-2″	18′-5″	16′-5″
1000S162-68	31′- 5″	27′-2″	24′-10″	22′-2″	27′-11″	24′-2″	22′-1″	19′-9″
1000S162-97	35′-6″	32′-3″	29′-11″	26′-9″	32′-3″	29′-2″	26′-7″	23′-9″
1200S162-43	21′-8″	17′-6″	15′-3″	12′-10″	18′-3″	14′-8″	12′-8″	10′-6²
1200S162-54	28′-5″	24′-8″	22′-6″	19′-6″	25′-3″	21′-11″	19′-4″	16′-6″
1200S162-68	33′-7″	29′-1″	26′-6″	23′-9″	29′-10″	25′-10″	23′-7″	21′-1″
1200S162-97	41′-5″	37′-8″	34′-6″	30′-10″	37′-8″	33′-6″	30′-7″	27′-5″

For SI: 1 inch = 25.4 mm, 1 foot = 304.8 mm, 1 pound per square foot = 0.0479kPa.

a. Deflection criteria: *L*/480 for live loads, *L*/240 for total loads.

b. Floor dead load = 10 psf.

c. Table provides the maximum clear span in feet and inches to either side of the interior support.

d. Interior bearing supports for multiple span joists consist of structural (bearing) walls or beams.

e. Bearing stiffeners are to be installed at all support points and concentrated loads.

f. Interior supports shall be located within 2 feet of mid-span provided that each of the resulting spans does not exceed the appropriate maximum span shown in the table above.

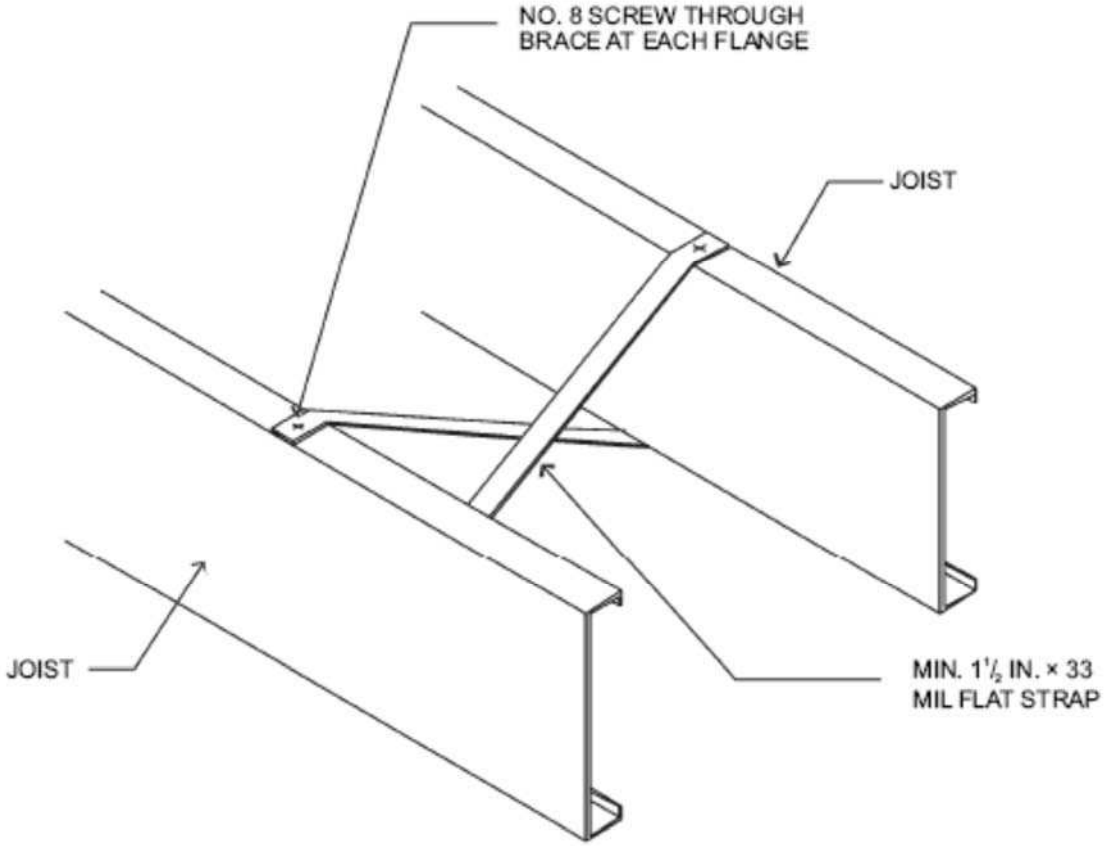

For SI: 1 mil = 0.0254 = 25.4 mm.

FIGURE 505.3.3.2(2)
JOIST BLOCKING (STRAP)

TABLE 505.3.2(3)
ALLOWABLE SPANS FOR COLD-FORMED STEEL JOISTS—MULTIPLE SPANS[a, b, c, d, e, f] 50 ksi STEEL

JOIST DESIGNATION	30 PSF LIVE LOAD				40 PSF LIVE LOAD			
	Spacing (inches)				Spacing (inches)			
	12	16	19.2	24	12	16	19.2	24
550S162-33	13′-11″	12′-0″	11′-0″	9′-3″	12′-3″	10′-8″	9′-7″	8′-4″
550S162-43	16′-3″	14′-1″	12′-10″	11′-6″	14′-6″	12′-6″	11′-5″	10′-3″
550S162-54	18′-2″	16′-6″	15′-4″	13′-8″	16′-6″	14′-11″	13′-7″	12′-2″
550S162-68	19′-6″	17′-9″	16′-8″	15′-6″	17′-9″	16′-1″	15′-2″	14′-0″
550S162-97	21′-9″	19′-9″	18′-6″	17′-2″	19′-8″	17′-10″	16′-8″	15′-8″
800S162-33	15′-6″	12′-6″	10′-10″	9′-1″	13′-0″	10′-5″	8′-11″	6′-9″
800S162-43	22′-0″	19′-1″	17′-5″	15′-0″	19′-7″	16′-11″	14′-10″	12′-8″
800S162-54	24′-6″	22′-4″	20′-6″	17′-11″	22′-5″	19′-9″	17′-11″	15′-10″

800S162-68	26′-6″	24′-1″	22′-8″	21′-0″	24′-1″	21′-10″	20′-7″	19′-2″
800S162-97	29′-9″	26′-8″	25′-2″	23′-5″	26′-8″	24′-3″	22′-11″	21′-4″
1000S162-43	23′-6″	19′-2″	16′-9″	14′-2″	19′-11″	16′-2″	14′-0″	11′-9″
1000S162-54	28′-2″	23′-10″	21′-7″	18′-11″	24′-8″	20′-11″	18′-9″	18′-4″
1000S162-68	31′- 10″	28′-11″	27′-2″	25′-3″	28′-11″	26′-3″	24′-9″	22′-9″
1000S162-97	35′-4″	32′-1″	30′-3″	28′-1″	32′-1″	29′-2″	27′-6″	25′-6″
1200S162-43	22′-11″	18′-5″	16′-0″	13′-4″	19′-2″	15′-4″	13′-2″	10′-6″
1200S162-54	32′-8″	28′-1″	24′-9″	21′-2″	29′-0″	23′-10″	20′-11″	17′-9″
1200S162-68	37′-1″	32′-5″	29′-4″	25′-10″	33′-4″	28′-6″	25′-9″	22′-7″
1200S162-97	41′-2″	37′-6″	35′-3″	32′-9″	37′-6″	34′-1″	32′-1″	29′-9″

For SI: 1 inch = 25.4 mm, 1 foot = 304.8 mm, 1 pound per square foot = 0.0479kPa.

a. Deflection criteria: *L*/480 for live loads, *L*/240 for total loads.

b. Floor dead load = 10 psf.

c. Table provides the maximum clear span in feet and inches to either side of the interior support.

d. Interior bearing supports for multiple span joists consist of structural (bearing) walls or beams.

e. Bearing stiffeners are to be installed at all support points and concentrated loads.

f. Interior supports shall be located within 2 feet of mid-span provided that each of the resulting spans does not exceed the appropriate maximum span shown in the table above.

505.3.3.3 Blocking at interior bearing supports. Blocking is not required for continuous back-to-back floor joists at bearing supports. Blocking shall be installed between every other joist for single continuous floor joists across bearing supports in accordance with Figure 505.3.1(7). Blocking shall consist of C-shape or track section with a minimum thickness of 33 mils (0.84 mm). Blocking shall be fastened to each adjacent joist through a 33-mil (0.84 mm) clip angle, bent web of blocking or flanges of web stiffeners with two No. 8 screws on each side. The minimum depth of the blocking shall be equal to the depth of the joist minus 2 inches (51 mm). The minimum length of the angle shall be equal to the depth of the joist minus 2 inches (51 mm).

505.3.3.4 Blocking at cantilevers. Blocking shall be installed between every other joist over cantilever bearing supports in accordance with Figure 505.3.1(4), 505.3.1(5) or 505.3.1(6). Blocking shall consist of C-shape or track section with minimum thickness of 33 mils (0.84 mm). Blocking shall be fastened to each adjacent joist through bent web of blocking, 33 mil clip angle or flange of web stiffener with two No.8 screws at each end. The depth of the blocking shall be equal to the depth of the joist. The minimum length of the angle shall be equal to the depth of the joist minus 2 inches (51 mm). Blocking shall be fastened through the floor sheathing and to the support with three No.8 screws (top and bottom).

505.3.4 Bearing stiffeners. Bearing stiffeners shall be installed at each joist bearing location in accordance with this section, except for joists lapped over an interior support not carrying a load-bearing wall above. Floor joists supporting jamb studs with multiple members shall have two bearing stiffeners in accordance with Figure 505.3.4(1). Bearing stiffeners shall be fabricated from a C-shaped, track or clip angle member in accordance with the one of following:

1. C-shaped bearing stiffeners:

   1.1 Where the joist is not carrying a load-bearing wall above, the bearing stiffener shall be a minimum 33 mil (0.84 mm) thickness.

   1.2 Where the joist is carrying a load-bearing wall above, the bearing stiffener shall be at least the same designation thickness as the wall stud above.

2. Track bearing stiffeners:

   2.1 Where the joist is not carrying a load-bearing wall above, the bearing stiffener shall be a minimum 43 mil (1.09 mm) thickness.

   2.2 Where the joist is carrying a load-bearing wall above, the bearing stiffener shall be at least one designation thickness greater than the wall stud above.

3. Clip angle bearing stiffeners: Where the clip angle bearing stiffener is fastened to both the web of the member it is stiffening and an adjacent rim track using the fastener pattern shown in Figure 505.3.4(2), the bearing stiffener shall be a minimum 2-inch by 2-inch (51 mm by 51 mm) angle sized in accordance with Tables 505.3.4(1), 505.3.4(2), 505.3.4(3), and 505.3.4(4).

The minimum length of a bearing stiffener shall be the depth of member being stiffened minus $^{3}/_{8}$ inch (9.5 mm). Each bearing stiffener shall be fastened to the web of the member it is stiffening as shown in Figure 505.3.4(2). Each clip angle bearing stiffener shall also be fastened to the web of the adjacent rim track using the fastener pattern shown in Figure 505.3.4(2). No. 8 screws shall be used for C-shaped and track members of any thickness and for clip angle members with a designation thickness less than or equal to 54. No. 10 screws

shall be used for clip angle members with a designation thickness greater than 54.

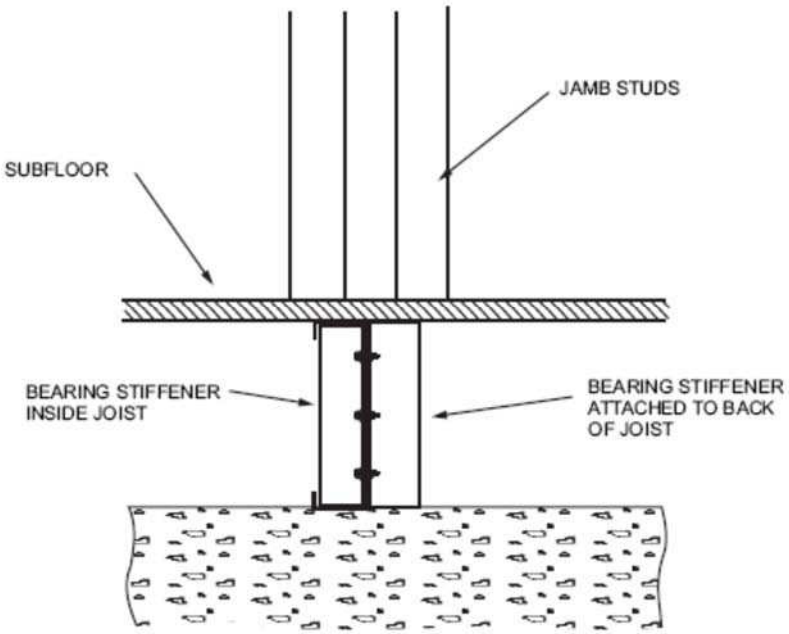

FIGURE 505.3.4(1)
BEARING STIFFENERS UNDER JAMB STUDS

TABLE 505.3.4(1)
CLIP ANGLE BEARING STIFFENERS
(20 psf equivalent snow load)

JOIST DESIGNATION	MINIMUM THICKNESS (mils) OF 2-INCH 2-INCH (51 mm 51 mm) CLIP ANGLE											
	Top floor				Bottom floor in 2 story Middle floor in 3 story				Bottom floor in 3 story			
	Joist spacing (inches)				Joist spacing (inches)				Joist spacing (inches)			
	12	16	19.2	24	12	16	19.2	24	12	16	19.2	24
800S162-33	43	43	43	43	43	54	68	68	68	97	97	—
800S162-43	43	43	43	43	54	54	68	68	97	97	97	97
800S162-54	43	43	43	43	43	54	68	68	68	97	97	—
800S162-68	43	43	43	43	43	43	54	68	54	97	97	—
800S162-97	43	43	43	43	43	43	43	43	43	43	54	97
1000S162-43	43	43	43	43	54	68	97	97	97	—	—	—
1000S162-54	43	43	43	43	54	68	68	97	97	97	—	—
1000S162-68	43	43	43	43	54	68	97	97	97	—	—	—

1000S162-97	43	43	43	43	43	43	43	54	43	68	97	—
1200S162-43	43	54	54	54	97	97	97	97	—	—	—	—
1200S162-54	54	54	54	54	97	97	97	97	—	—	—	—
1200S162-68	43	43	54	54	68	97	97	97	—	—	—	—
1200S162-97	43	43	43	43	43	54	68	97	97	—	—	—

For SI: 1 mil = 0.254 mm, 1 inch = 25.4 mm, 1 pound per square foot = 0.0479kPa.

TABLE 505.3.4(2)
CLIP ANGLE BEARING STIFFENERS
(30 psf equivalent snow load)

JOIST DESIGNATION	MINIMUM THICKNESS (mils) OF 2-INCH 2 INCH (51 mm 51 mm) CLIP ANGLE											
	Top floor				Bottom floor in 2 story Middle floor in 3 story				Bottom floor in 3 story			
	Joist spacing (inches)				Joist spacing (inches)				Joist spacing (inches)			
	12	16	19.2	24	12	16	19.2	24	12	16	19.2	24
800S162-33	43	43	43	43	54	68	68	97	97	97	97	—
800S162-43	43	43	43	54	68	68	68	97	97	97	97	—
800S162-54	43	43	43	43	54	68	68	97	97	97	—	—
800S162-68	43	43	43	43	43	54	68	97	68	97	97	—
800S162-97	43	43	43	43	43	43	43	43	43	43	68	97
1000S162-43	54	54	54	54	68	97	97	97	97	—	—	—
1000S162-54	54	54	54	54	68	97	97	97	97	—	—	—
1000S162-68	43	43	54	68	68	97	97	—	97	—	—	—
1000S162-97	43	43	43	43	43	43	54	68	54	97	—	—
1200S162-43	54	68	68	68	97	97	97	—	—	—	—	—
1200S162-54	68	68	68	68	97	97	—	—	—	—	—	—
1200S162-68	68	68	68	68	97	97	97	—	—	—	—	—
1200S162-97	43	43	43	43	54	68	97	—	97	—	—	—

For SI: 1 mil = 0.0254 mm, 1 inch = 25.4 mm, 1pound per square foot = 0.0479kPa.

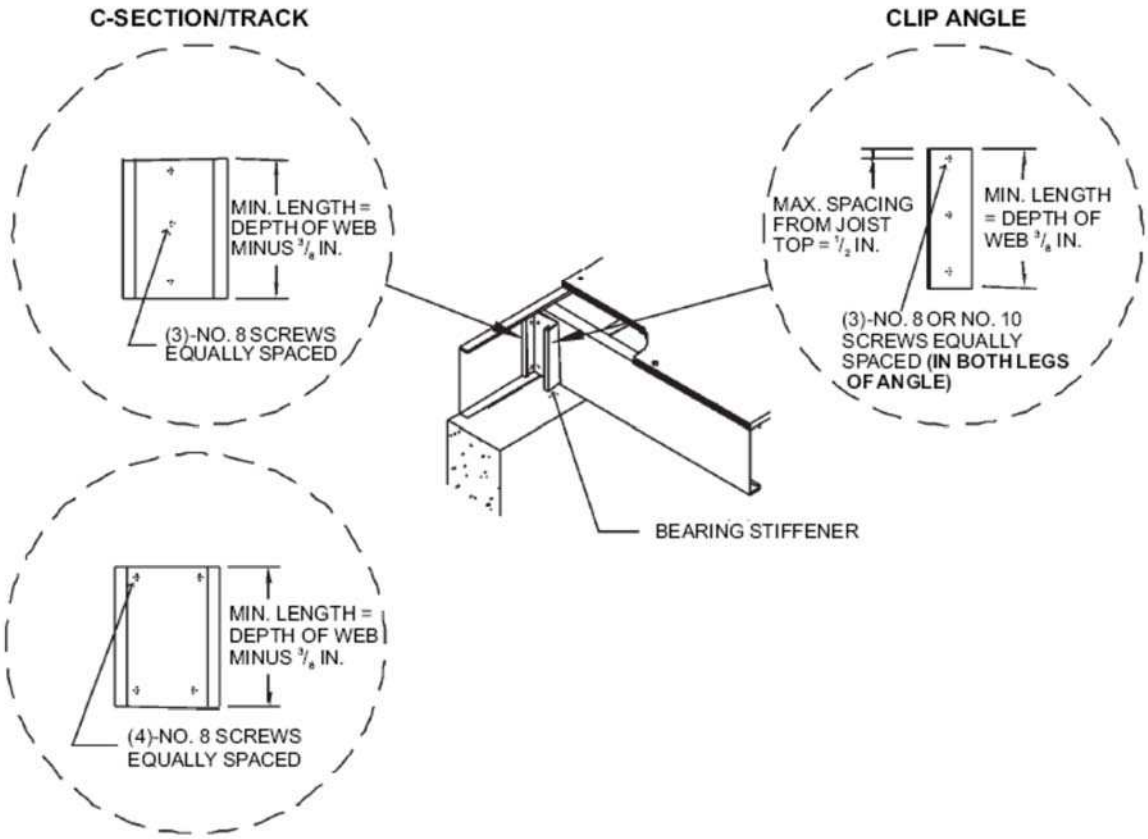

For SI: 1 inch = 25.4 mm.

FIGURE 505.3.4(2)
BEARING STIFFENER

TABLE 505.3.4(3)
CLIP ANGLE BEARING STIFFENERS
(50 psf equivalent snow load)

JOIST DESIGNATION	MINIMUM THICKNESS (mils) OF 2-INCH 2-INCH (51 mm 51 mm) CLIP ANGLE											
	Top floor				Bottom floor in 2 story Middle floor in 3 story				Bottom floor in 3 story			
	Joist spacing (inches)				Joist spacing (inches)				Joist spacing (inches)			
	12	16	19.2	24	12	16	19.2	24	12	16	19.2	24
800S162-33	54	54	54	54	68	97	97	97	97	—	—	—
800S162-43	68	68	68	68	97	97	97	97	—	—	—	—
800S162-54	54	68	68	68	97	97	97	97	—	—	—	—
800S162-68	43	43	54	54	68	97	97	97	97	—	—	—
800S162-97	43	43	43	43	43	43	43	54	54	68	97	—
1000S162-43	97	68	68	68	97	97	97	97	—	—	—	—

1000S162-54	97	97	68	68	97	97	97	—	—	—	—	—
1000S162-68	68	97	97	97	97	—	—	—	—	—	—	—
1000S162-97	43	43	43	43	54	68	97	97	—	—	—	—
1200S162-43	97	97	97	97	—	—	—	—	—	—	—	—
1200S162-54	—	97	97	97	—	—	—	—	—	—	—	—
1200S162-68	97	97	97	97	—	—	—	—	—	—	—	—
1200S162-97	54	68	68	97	97	—	—	—	—	—	—	—

For SI: 1 mil = 0.0254 mm, 1 inch = 25.4 mm, 1 pound per square foot = 0.0479kPa.

TABLE 505.3.4(4)
CLIP ANGLE BEARING STIFFENERS
(70 psf equivalent snow load)

JOIST DESIGNATION	MINIMUM THICKNESS (mils) OF 2-INCH 2-INCH (51 mm 51 mm) CLIP ANGLE											
	Top floor				Bottom floor in 2 story Middle floor in 3 story				Bottom floor in 3 story			
	Joist spacing (inches)				Joist spacing (inches)				Joist spacing (inches)			
	12	16	19.2	24	12	16	19.2	24	12	16	19.2	24
800S162-33	68	68	68	68	97	97	97	97	—	—	—	—
800S162-43	97	97	97	97	97	97	97	—	—	—	—	—
800S162-54	97	97	97	97	97	—	—	—	—	—	—	—
800S162-68	68	68	68	97	97	97	97	—	—	—	—	—
800S162-97	43	43	43	43	43	54	68	97	97	97	—	—
1000S162-43	97	97	97	97	—	—	—	—	—	—	—	—
1000S162-54	—	97	97	97	—	—	—	—	—	—	—	—
1000S162-68	97	97	—	—	—	—	—	—	—	—	—	—
1000S162-97	68	68	68	68	97	97	—	—	—	—	—	—
1200S162-43	97	97	97	97	—	—	—	—	—	—	—	—
1200S162-54	—	—	—	—	—	—	—	—	—	—	—	—
1200S162-68	—	—	—	—	—	—	—	—	—	—	—	—
1200S162-97	97	97	97	—	—	—	—	—	—	—	—	—

For SI: 1 mil 0.0254 mm, 1 inch = 25.4 mm, 1 pound per square foot = 0.0479kPa.

505.3.5 Cutting and notching. Flanges and lips of load-bearing cold-formed steel floor framing members shall not be cut or notched.

505.3.6 Floor cantilevers. Floor cantilevers for the top floor of a two-or three-story building or the first floor of a one-story building shall not exceed 24 inches (610 mm). Cantilevers, not exceeding 24 inches (610 mm) and supporting two stories and roof (i.e., first floor of a two-story building), shall also be permitted

provided that all cantilevered joists are doubled (nested or back-to-back). The doubled cantilevered joists shall extend a minimum of 6 feet (1829 mm) toward the inside and shall be fastened with a minimum of two No.8 screws spaced at 24 inches (610 mm) on center through the webs (for back-to-back) or flanges (for nested joists).

505.3.7 Splicing. Joists and other structural members shall not be spliced. Splicing of tracks shall conform to Figure 505.3.7.

505.3.8 Framing of floor openings. Openings in floors shall be framed with header and trimmer joists. Header joist spans shall not exceed 6 feet (1829 mm) or 8 feet (2438 mm) in length in accordance with Figure 505.3.8(1) or 505.3.8(2), respectively. Header and trimmer joists shall be fabricated from joist and track members, having a minimum size and thickness at least equivalent to the adjacent floor joists and shall be installed in accordance with Figures 505.3.8(1), 505.3.8(2), 505.3.8(3), and 505.3.8(4). Each header joist shall be connected to trimmer joists with four 2-inch-by-2-inch (51mm by 51 mm) clip angles. Each clip angle shall be fastened to both the header and trimmer joists with four No. 8 screws, evenly spaced, through each leg of the clip angle. The clip angles shall have a thickness not less than that of the floor joist. Each track section for a built-up header or trimmer joist shall extend the full length of the joist (continuous).

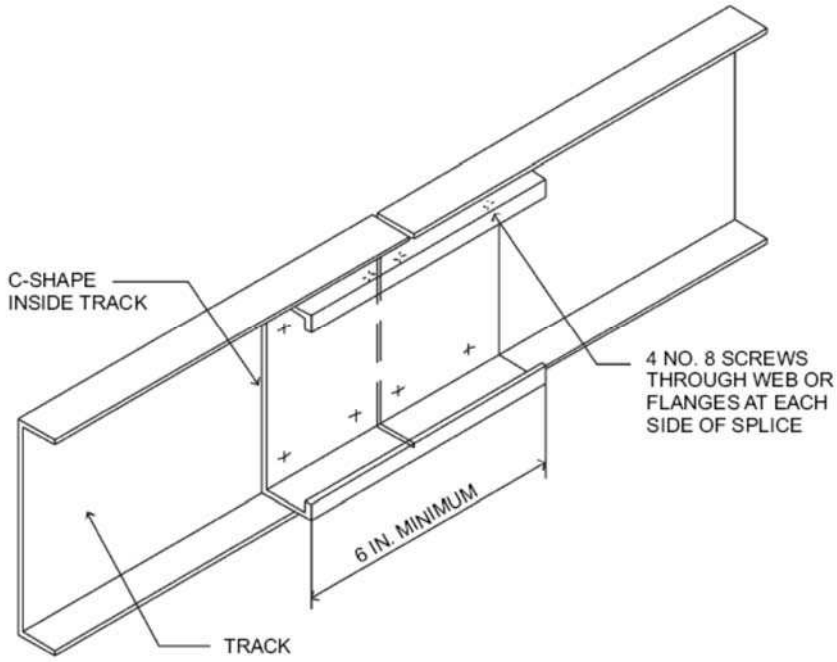

For SI: 1 inch = 25.4 mm.

FIGURE 505.3.7
TRACK SPLICE

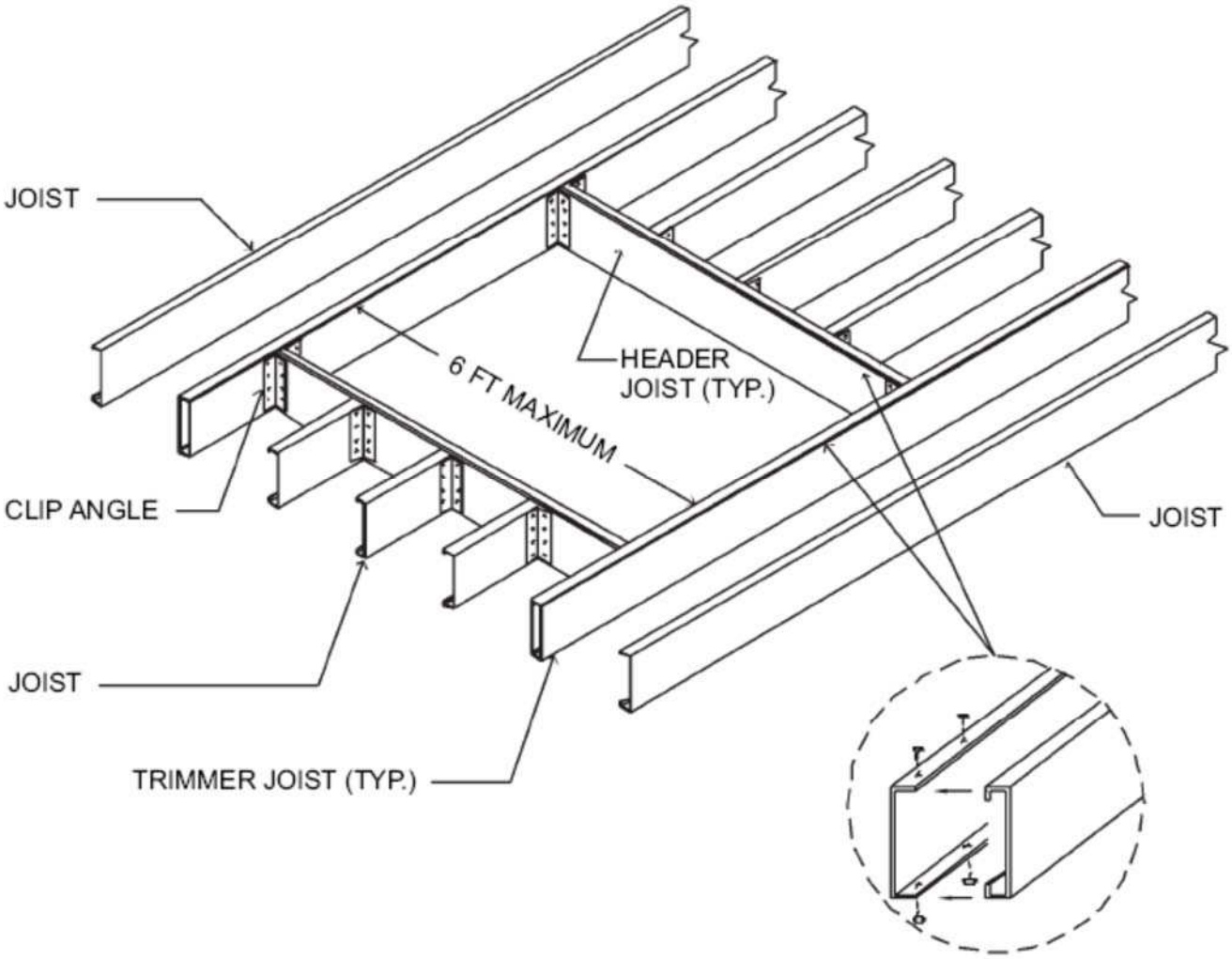

For SI: 1 foot = 304.8 mm.

FIGURE 505.3.8(1)
COLD-FORMED STEEL FLOOR CONSTRUCTION: 6-FOOT FLOOR OPENING

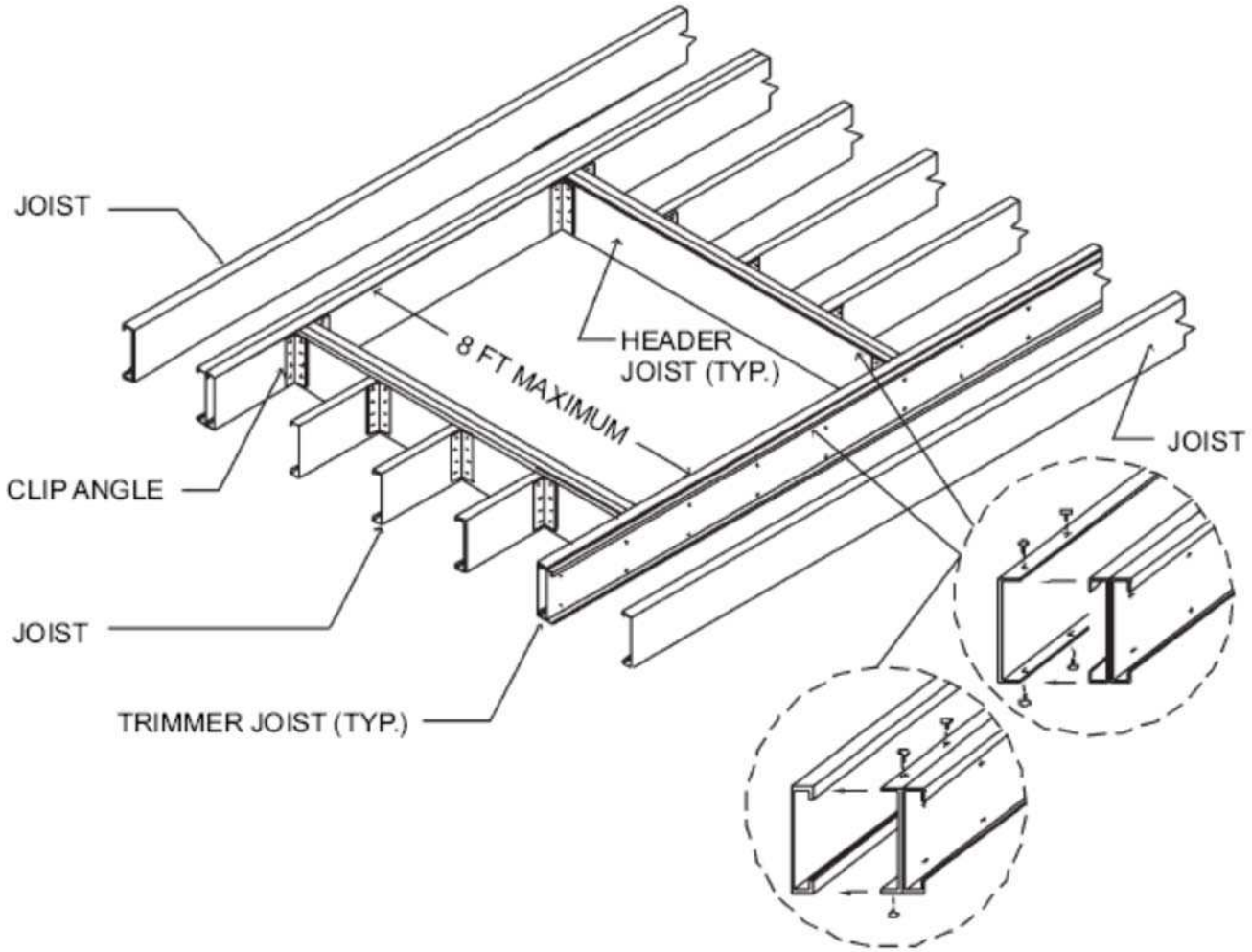

For SI: 1 foot = 304.8 mm.

FIGURE 505.3.8(2)
COLD-FORMED STEEL FLOOR CONSTRUCTION: 8-FOOT FLOOR OPENING

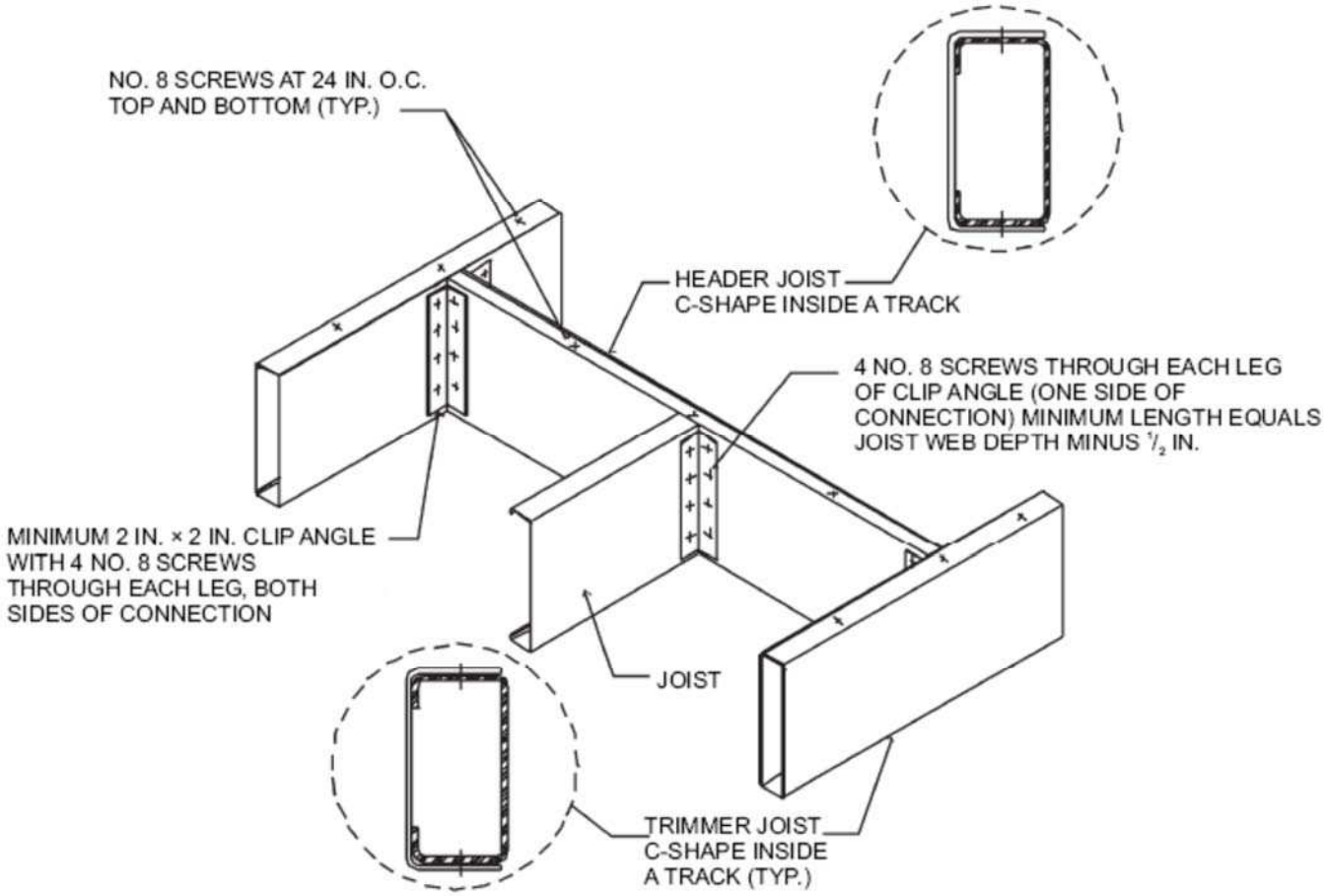

For SI: 1 inch = 25.4 mm.

FIGURE 505.3.8(3)
COLD-FORMED STEEL FLOOR CONSTRUCTION:
FLOOR HEADER TO TRIMMER CONNECTION—6-FOOT OPENING

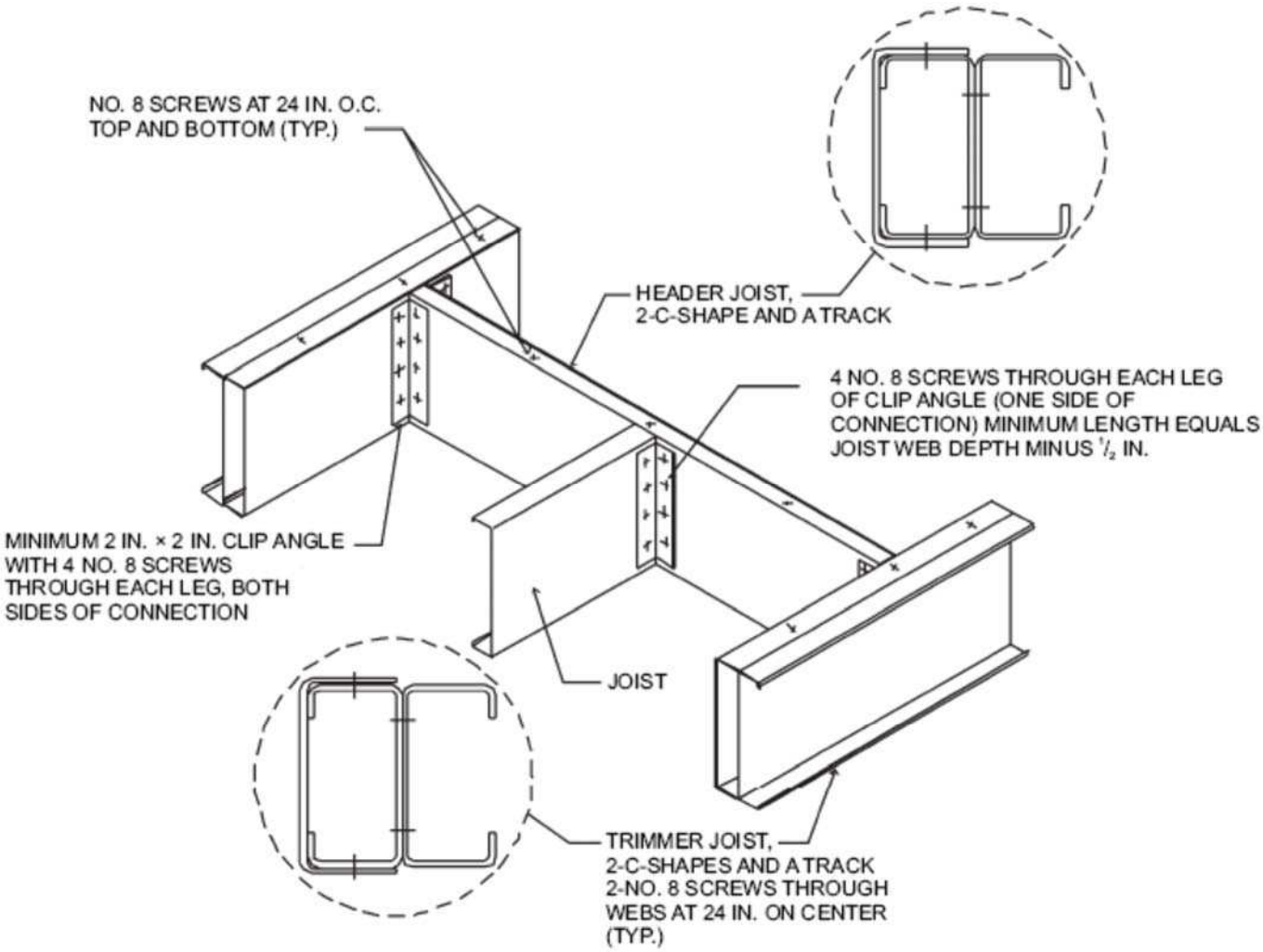

For SI: 1 inch = 25.4 mm.

FIGURE 505.3.8(4)
COLD-FORMED STEEL FLOOR CONSTRUCTION:
FLOOR HEADER TO TRIMMER CONNECTION—8-FOOT OPENING

SECTION 506
CONCRETE FLOORS (ON GROUND)

506.1 General. Concrete slab-on-ground floors shall be a minimum 3.5 inches (89 mm) thick (for expansive soils, see Section 403.1.8). The specified compressive strength of concrete shall be as set forth in Section 402.2.

506.2 Site preparation. The area within the foundation walls shall have all vegetation, top soil and foreign material removed.

506.2.1 Fill. Fill material shall be free of vegetation and foreign material. The fill shall be compacted to assure uniform support of the slab, and except where

approved, the fill depths shall not exceed 24 inches (610 mm) for clean sand or gravel and 8 inches (203 mm) for earth.

Exception: *Fills constructed of controlled low-strength material (CLSM) need not be compacted.*

506.2.2 Base. A 4-inch-thick (102 mm) base course consisting of clean graded sand, gravel, crushed stone or crushed blast-furnace slag passing a 2-inch (51 mm) sieve shall be placed on the prepared subgrade when the slab is below grade.

Exception: A base course is not required when the concrete slab is installed on well-drained or sand-gravel mixture soils classified as Group I according to the United Soil Classification System in accordance with Table 405.1.

506.2.3 Vapor retarder. A 6 mil (0.006 inch; 152 μm) polyethylene or approved vapor retarder with joints lapped not less than 6 inches (152 mm) shall be placed between the concrete floor slab and the base course or the prepared subgrade where no base course exists.

Exception: The vapor retarder may be omitted:

1. From detached garages, utility buildings and other unheated accessory structures.

2. For unheated storage rooms having an area of less than 70 square feet (6.5 m^2) and carports.

3. From driveways, walks, patios and other flatwork not likely to be enclosed and heated at a later date.

4. Where approved by the building official, based on local site conditions.

506.2.4 Reinforcement support. Where provided in slabs on ground, reinforcement shall be supported to remain in place from the center to upper one third of the slab for the duration of the concrete placement.

Effective:	1/1/2018
Five Year Review (FYR) Dates:	1/1/2018

CERTIFIED ELECTRONICALLY

Certification

12/22/2017

Date

Promulgated Under:	119.03
Statutory Authority:	3781.10(A)
Rule Amplifies:	3781.01, 3781.06, 3781.10, 3781.11, 3791.04, 4740.14
Prior Effective Dates:	5/27/06, 1/1/13, 1/1/16

4101:8-6-01 Wall construction.

[Comment: When a reference is made within this rule to a federal statutory provision, an industry consensus standard, or any other technical publication, the specific date and title of the publication as well as the name and address of the promulgating agency are listed in rule 4101:8-44-01 of the Administrative Code. The application of the referenced standards shall be limited and as prescribed in section 102.5 of rule 4101:8-1-01 of the Administrative Code.]

SECTION 601
GENERAL

601.1 Application. The provisions of this chapter shall control the design and construction of all walls and partitions for all buildings.

601.2 Requirements. Wall construction shall be capable of accommodating all loads imposed according to Section 301 and of transmitting the resulting loads to the supporting structural elements.

601.2.1 Compressible floor-covering materials. Compressible floor-covering materials that compress more than $^{1}/_{32}$ inch (0.8 mm) when subjected to 50 pounds (23 kg) applied over 1 inch square (645 mm) of material and are greater than $^{1}/_{8}$ inch (3 mm) in thickness in the uncompressed state shall not extend beneath walls, partitions or columns, which are fastened to the floor.

601.3 Vapor retarders. Class I or II vapor retarders are required on the interior side of frame walls in Zones 5, 6, 7, 8 and Marine 4.

Exceptions:

1. Basement walls.

2. Below grade portion of any wall.

3. Construction where moisture or its freezing will not damage the materials.

4. *Class III vapor retarders complying with Section 601.3.1.*

601.3.1 Class III vapor retarders. Class III vapor retarders shall be permitted where any one of the conditions in Table 601.3.1 is met.

601.3.2 Material vapor retarder class. The vapor retarder class shall be based on the manufacturer's certified testing or a tested assembly.

The following shall be deemed to meet the class specified:

Class I: Sheet polyethylene, unperforated aluminum foil.

Class II: Kraft-faced fiberglass batts.

Class III: Latex or enamel paint.

601.3.3 Minimum clear air spaces and vented openings for vented cladding. For the purposes of this section, vented cladding shall include the following minimum clear air spaces. Other openings with the equivalent vent area shall be permitted.

1. Vinyl lap or horizontal aluminum siding applied over a weather resistive barrier as specified in Table 703.4.

2. Brick veneer with a clear airspace as specified in Section 703.7.4.2.

3. Other approved vented claddings.

TABLE 601.3.1
CLASS III VAPOR RETARDERS

ZONE	CLASS III VAPOR RETARDERS PERMITTED FOR:[a]
5	Vented cladding over OSB Vented cladding over plywood Vented cladding over fiberboard Vented cladding over gypsum Insulated sheathing with *R*-value ≥ 5 over 2 x 4 wall Insulated sheathing with *R*-value ≥ 7.5 over 2 x 6 wall
6	Vented cladding over fiberboard Vented cladding over gypsum Insulated sheathing with *R*-value ≥ 7.5 over 2 x 4 wall Insulated sheathing with *R*-value ≥ 11.25 over 2 x 6 wall
7 and 8	Insulated sheathing with *R*-value ≥ 10 over 2 x 4 wall Insulated sheathing with *R*-value ≥ 15 over 2 x 6 wall

For SI: 1 pound per cubic foot = 16.02 kg/m^3.

a. Spray foam with a minimum density of 2 lb/ft^3 applied to the interior cavity side of OSB, plywood, fiberboard, insulating sheathing or gypsum is deemed to meet the insulating sheathing requirement where the spray foam *R*-value meets or exceeds the specified insulating sheathing *R*-value.

SECTION 602
WOOD WALL FRAMING

602.1 Identification. Load-bearing dimension lumber for studs, plates and headers shall be identified by a grade mark of a lumber grading or inspection agency that has been approved by an accreditation body that complies with DOC PS 20. In lieu of a grade mark, a certification of inspection issued by *an approved* lumber grading or inspection agency shall be accepted.

602.1.1 End-jointed lumber. Approved end-jointed lumber identified by a grade mark conforming to Section 602.1 may be used interchangeably with solid-sawn members of the same species and grade.

602.1.2 Structural glued laminated timbers. Glued laminated timbers shall be manufactured and identified as required in ANSI/AITC A190.1 and ASTM D 3737.

602.1.3 Structural log members. Stress grading of structural log members of nonrectangular shape, as typically used in log buildings, shall be in accordance with ASTM D 3957. Such structural log members shall be identified by the grade mark of an approved lumber grading or inspection agency. In lieu of a grade mark on the material, a certificate of inspection as to species and grade, issued by *an approved* lumber-grading or inspection agency, shall be permitted to be accepted.

602.2 Grade. Studs shall be a minimum No. 3, standard or stud grade lumber.

Exception: Bearing studs not supporting floors and nonbearing studs may be utility grade lumber, provided the studs are spaced in accordance with Table 602.3(5).

602.3 *Exterior walls, d*esign and construction. Exterior walls of wood-frame construction shall be designed and constructed in accordance with the provisions of this chapter and Figures 602.3(1) and 602.3.(2) or in accordance with AF&PA's NDS. Components of exterior walls shall be fastened in accordance with Tables 602.3(1) through 602.3(4). Structural wall sheathing shall be fastened directly to structural framing members. Exterior wall coverings shall be capable of resisting the wind pressures listed in Table 301.2(2) adjusted for height and exposure using Table 301.2(3). Wood structural panel sheathing used for exterior walls shall conform to the requirements of Table 602.3(3). *Exterior walls shall be fireblocked in accordance with Section 602.8*.

Studs shall be continuous from support at the sole plate to a support at the top plate to resist loads perpendicular to the wall. The support shall be a foundation or floor, ceiling or roof diaphragm or shall be designed in accordance with accepted engineering practice.

Exception: Jack studs, trimmer studs and cripple studs at openings in walls that comply with Tables 502.5(1) and 502.5(2).

602.3.1 Stud size, height and spacing. The size, height and spacing of studs shall be in accordance with Table 602.3.(5).

Exceptions:

1. Utility grade studs shall not be spaced more than 16 inches (406 mm) on center, shall not support more than a roof and ceiling, and shall not exceed 8 feet (2438 mm) in height for exterior walls and load-bearing walls or 10 feet (3048 mm) for interior nonload-bearing walls.

2. Studs more than 10 feet (3048 mm) in height which are in accordance with Table 602.3.1.

602.3.2 Top plate. Wood stud walls shall be capped with a double top plate installed to provide overlapping at corners and intersections with bearing partitions. End joints in top plates shall be offset at least 24 inches (610 mm). Joints in plates need not occur over studs. Plates shall

be not less than 2-inches (51 mm) nominal thickness and have a width at least equal to the width of the studs.

Exception: A single top plate may be installed in stud walls, provided the plate is adequately tied at joints, corners and intersecting walls by a minimum 3-inch-by6-inch by a 0.036-inch-thick (76 mm by 152 mm by 0.914 mm) galvanized steel plate that is nailed to each wall or segment of wall by six 8d nails on each side, provided the rafters or joists are centered over the studs with a tolerance of no more than 1 inch (25 mm). The top plate may be omitted over lintels that are adequately tied to adjacent wall sections with steel plates or equivalent as previously described.

602.3.3 Bearing studs. Where joists, trusses or rafters are spaced more than 16 inches (406 mm) on center and the bearing studs below are spaced 24 inches (610 mm) on center, such members shall bear within 5 inches (127 mm) of the studs beneath.

Exceptions:

1. The top plates are two 2-inch by 6-inch (38 mm by 140 mm) or two 3-inch by 4-inch (64 mm by 89 mm) members.

2. A third top plate is installed.

3. Solid blocking equal in size to the studs is installed to reinforce the double top plate.

602.3.4 Bottom (sole) plate. Studs shall have full bearing on a nominal 2-by (51 mm) or larger plate or sill having a width at least equal to the width of the studs.

602.4 Interior load-bearing walls. Interior load-bearing walls shall be constructed, framed and fireblocked as specified for exterior walls *in accordance with Section 602.8.*

602.5 Interior nonbearing walls. Interior nonbearing walls shall be permitted to be constructed with 2-inch-by-3-inch (51 mm by 76 mm) studs spaced 24 inches (610 mm) on center or, when not part of a braced wall line, 2-inch-by-4-inch (51 mm by 102 mm) flat studs spaced at 16 inches (406 mm) on center. Interior nonbearing walls shall be capped with at least a single top plate. Interior nonbearing walls shall be fireblocked in accordance with Section 602.8.

TABLE 602.3(1)
FASTENER SCHEDULE FOR STRUCTURAL MEMBERS

ITEM	DESCRIPTION OF BUILDING ELEMENTS	NUMBER AND TYPE OF FASTENER[a, b, c]	SPACING OF FASTENERS
Roof			
1	Blocking between joists or rafters to top plate, toe nail	3-8d (2½ " x 0.113")	—
2	Ceiling joists to plate, toe nail	3-8d (2½ " x 0.113")	—
3	Ceiling joists not attached to parallel rafter, laps over partitions, face nail	3-10d	—
4	Collar tie rafter, face nail or 1¼"x 20 gage ridge strap	3-10d (3" x 0.128")	—
5	Rafter to plate, toe nail	2-16d (3½ " x 0.135")	—

6	Roof rafters to ridge, valley or hip rafters: toe nail face nail	4-16d (3½ “ x 0.135”) 3-16d (3½ “ x 0.135”)	— —
Wall			
7	Built-up corner studs	10d (3“ x 0.128”)	24”o.c.
8	Built-up header, two pieces with ½“spacer	16d (3½ “ x 0.135”)	16”o.c. along each edge
9	Continued header, two pieces	16d (3½ “ x 0.135”)	16”o.c. along each edge
10	Continuous header to stud, toe nail	4-8d (2½ “ x 0.113”)	—
11	Double studs, face nail	10d (3“ x 0.128”)	24”o.c.
12	Double top plates, face nail	10d (3“ x 0.128”)	24”o.c.
13	Double top plates, minimum *24*-inch offset of end joints, face nail in lapped area	8-16d (3½ “ x 0.135”)	—
14	Sole plate to joist or blocking, face nail	16d (3½ “ x 0.135”)	16”o.c.
15	Sole plate to joist or blocking at braced wall panels	3-16d (3½ “ x 0.135”)	16”o.c.
16	Stud to sole plate, toe nail	3-8d (2½ “ x 0.113”) or 2-16d (3½ “ x 0.135”)	— —
17	Top or sole plate to stud, end nail	2-16d (3½ “ x 0.135”)	—
18	Top plates, laps at corners and intersections, face nail	2-10d (3“ x 0.128”)	—
19	1” brace to each stud and plate, face nail	2-8d (2½ “ x 0.113”) 2 staples 1¾”	— —
20	1”x 6”sheathing to each bearing, face nail	2-8d (2½ “ x 0.113”) 2 staples 1¾”	— —
21	1”x 8”sheathing to each bearing, face nail	2-8d (2½ “ x 0.113”) 3 staples 1¾”	— —
22	Wider than 1”x 8”sheathing to each bearing, face nail	3-8d (2½ “ x 0.113”) 4 staples 1¾”	— —
Floor			
23	Joist to sill or girder, toe nail	3-8d (2½ “ x 0.113”)	—
24	1”x 6”subfloor or less to each joist, face nail	2-8d (2½ “ x 0.113”) 2 staples 1¾”	— —
25	2” subfloor to joist or girder, blind and face nail	2-16d (3½ “ x 0.135”)	—
26	Rim joist to top plate, toe nail (roof applications also)	8d (2½ “ x 0.113”)	6”o.c.
27	2” planks (plank & beam – floor & roof)	2-16d (3½ “ x 0.135”)	at each bearing
28	Built-up girders and beams, 2-inch lumber layers	10d (3“ x 0.128”)	Nail each layer as follows: 32”o.c. at top and bottom and staggered. Two nails at ends and at each splice.
29	Ledger strip supporting joists or rafters	3-16d (3½ “ x 0.135”)	At each joist or rafter

TABLE 602.3(1)—continued
FASTENER SCHEDULE FOR STRUCTURAL MEMBERS

ITEM	DESCRIPTION OF BUILDING MATERIALS	DESCRIPTION OF FASTENER[b, c, e]	SPACING OF FASTENERS	
			Edges (inches)[i]	Intermediate supports[c, e] (inches)
Wood structural panels, subfloor, roof and interior wall sheathing to framing and particleboard wall sheathing to framing				
30	3/8"-½"	6d common (2" x 0.113") nail (subfloor wall)[j] 8d common (2½ " x 0.131") nail (roof)[f]	6	12[g]
31	19/32"-1"	8d common nail (2½ " x 0.131")	6	12[g]
32	1 1/8"- 1¼"	10d common (3" x 0.148") nail or 8d (2½ " x 0.131") deformed nail	6	12
Other wall sheathing[h]				
33	½"structural cellulosic fiberboard sheathing	1½"galvanized roofing nail, 7/16"crown or 1" crown staple 16 ga., 1¼"long	3	6
34	25/32"structural cellulosic fiberboard sheathing	1¾" galvanized roofing nail, 7/16" crown or 1" crown staple 16 ga., 1½"long	3	6
35	½"gypsum sheathing[d]	1½" galvanized roofing nail; staple galvanized, 1½"long; 1¼" screws, Type W or S	7	7
36	5/8"gypsum sheathing[d]	1¾"glavanized roofing nail; staple galvanized, 1 5/8"long; 1 5/8"screws, Type W or S	7	7
Wood structural panels, combination subfloor underlayment to framing				
37	¾" and less	6d deformed (2" x 0.120") nail or 8d common (2½" x 0.131") nail	6	12
38	7/8"-1"	8d common (2½" x 0.131") nail or 8d deformed (2½ " x 0.120") nail	6	12
39	1 1/8"- 1¼"	10d common (3" x 0.148") nail or 8d deformed (2½" x 0.120") nail	6	12
Steel column, posts, and beam attachment				
40	*Beams ending in a beam pocket, beam clip angles.*	*Clip angles either welded to the beam along each clip angle's entire length or bolted to the beam using a minimum of ½" diameter bolts. Clip angle attached to the foundation wall using no less than a ½" diameter anchor.*	--	--
41	*Beams, steel column top plate.*	*Column top plate either welded along the length of the two sides perpendicular to the beam's length or bolted with no less than two ½" diameter bolts placed diagonally through the top plate.*	--	--
42	*Beams ending over a steel column, steel column top plate.*	*Column top plate bolted to beam with at least four ½" diameter bolts.*	--	--
43	*Steel column(s) base plate(s) (for beams ending in beam pockets), footing(s).*	*Anchored to concrete footing pad(s) with no less than two ½" diameter anchors placed diagonally through the base plate(s) of the steel column(s) into the concrete footing pad(s)*	--	--
44	*Steel column base plate (when beam ends over a steel column), footing.*	*Anchored to concrete footing pad with no less than four ½" diameter anchors through the base plate of the steel column to the concrete footing pad.*	--	--

For SI: 1 inch = 25.4 mm, 1 foot = 304.8 mm, 1 mile per hour = 0.447 m/s; 1ksi = 6.895 MPa.

a. All nails are smooth-common, box or deformed shanks except where otherwise stated. Nails used for framing and sheathing connections shall have minimum average bending yield strengths as shown: 80 ksi for shank diameter of 0.192 inch (20d common nail), 90 ksi for shank diameters larger than 0.142 inch but not larger than 0.177 inch, and 100 ksi for shank diameters of 0.142 inch or less.

b. Staples are 16 gage wire and have a minimum 7/16-inch on diameter crown width.

c. Nails shall be spaced at not more than 6 inches on center at all supports where spans are 48 inches or greater.
d. Four-foot-by-8-foot or 4-foot-by-9-foot panels shall be applied vertically.
e. Spacing of fasteners not included in this table shall be based on Table 602.3(2).
f. For regions having basic wind speed of 110 mph or greater, 8d deformed (2½" x 0.120") nails shall be used for attaching plywood and wood structural panel roof sheathing to framing within minimum 48-inch distance from gable end walls, if mean roof height is more than 25 feet, up to 35 feet maximum.
g. For regions having basic wind speed of 100 mph or less, nails for attaching wood structural panel roof sheathing to gable end wall framing shall be spaced 6 inches on center. When basic wind speed is greater than 100 mph, nails for attaching panel roof sheathing to intermediate supports shall be spaced 6 inches on center for minimum 48-inch distance from ridges, eaves and gable end walls; and 4 inches on center to gable end wall framing.
h. Gypsum sheathing shall conform to ASTM C 1396 and shall be installed in accordance with GA 253. Fiberboard sheathing shall conform to ASTM C 208.
i. Spacing of fasteners on floor sheathing panel edges applies to panel edges supported by framing members and required blocking and at all floor perimeters only. Spacing of fasteners on roof sheathing panel edges applies to panel edges supported by framing members and required blocking. Blocking of roof or floor sheathing panel edges perpendicular to the framing members need not be provided except as required by other provisions of this code. Floor perimeter shall be supported by framing members or solid blocking.

TABLE 602.3(2)
ALTERNATE ATTACHMENTS

NOMINAL MATERIAL THICKNESS (inches)	DESCRIPTION[a, b] OF FASTENER AND LENGTH (inches)	SPACING[c] OF FASTENERS	
		Edges (inches)	Intermediate supports (inches)
Wood structural panels subfloor, roof and wall sheathing to framing and particleboard wall sheathing to framing[f]			
up to ½	Staple 15 ga. 1¾	4	8
	0.097 - 0.099 Nail 2¼	3	6
	Staple 16 ga. 1¾	3	6
19/32 and 5/8	0.113 Nail 2	3	6
	Staple 15 and 16 ga. 2	4	8
	0.097 - 0.099 Nail 2¼	4	8
23/32 and ¾	Staple 14 ga. 2	4	8
	Staple 15 ga. 1¾	3	6
	0.097 - 0.099 Nail 2¼	4	8
	Staple 16 ga. 2	4	8
1	Staple 14 ga. 2¼	4	8
	0.113 Nail 2¼	3	6
	Staple 15 ga. 2¼	4	8
	0.097 - 0.099 Nail 2½	4	8
NOMINAL MATERIAL THICKNESS (inches)	**DESCRIPTION[a, b] OF FASTENER AND LENGTH (inches)**	**SPACING[c] OF FASTENERS**	
		Edges (inches)	**Body of panel[d] (inches)**
Floor underlayment; plywood-hardboard-particleboard[f]			
Plywood			
¼ and 5/16	1¼ ring or screw shank nail—minimum 12½ ga. (0.099") shank diameter	3	6
	Staple 18 ga., 7/8, 3/16 crown width	2	5
11/32, 3/8, 15/32, and ½	1¼ ring or screw shank nail—minimum 12½ ga. (0.099") shank diameter	6	8e
19/32, 5/8, 23/32 and ¾	1½ ring or screw shank nail—minimum 12½ ga. (0.099") shank diameter	6	8
	Staple 16 ga. 1½	6	8

Hardboard[f]			
0.200	1½ long ring-grooved underlayment nail	6	6
	4d cement-coated sinker nail	6	6
	Staple 18 ga., 7/8 long (plastic coated)	3	6
Particleboard			
¼	4d ring-grooved underlayment nail	3	6
	Staple 18 ga., 7/8 long, 3/16 crown	3	6
3/8	6d ring-grooved underlayment nail	6	10
	Staple 16 ga., 1 1/8 long, 3/8 crown	3	6
½, 5/8	6d ring-grooved underlayment nail	6	10
	Staple 16 ga., 1 5/8 long, 3/8 crown	3	6

For SI: 1 inch = 25.4 mm.

a. Nail is a general description and may be T-head, modified round head or round head.

b. Staples shall have a minimum crown width of 5/8-inch on diameter except as noted.

c. Nails or staples shall be spaced at not more than 6 inches on center at all supports where spans are 48 inches or greater. Nails or staples shall be spaced at not more than 12 inches on center at intermediate supports for floors.

d. Fasteners shall be placed in a grid pattern throughout the body of the panel.

e. For 5-ply panels, intermediate nails shall be spaced not more than 12 inches on center each way.

f. Hardboard underlayment shall conform to CPA/ANSI A135.4.

TABLE 602.3(3)
REQUIREMENTS FOR WOOD STRUCTURAL PANEL WALL SHEATHING USED TO RESIST WIND PRESSURES[a,b,c]

MINIMUM NAIL		MINIMUM WOOD STRUCTURAL PANEL SPAN RATING	MINIMUM NOMINAL PANEL THICKNESS (inches)	MAXIMUM WALL STUD SPACING (inches)	PANEL NAIL SPACING		MAXIMUM WIND SPEED (mph)		
					Edges (inches o.c.)	Field (inches o.c.)	Wind exposure category		
Size	Penetration (inches)						B	C	D
6d Common (2.0″ × 0.113″)	1.5	24/0	3/8	16	6	12	110	90	85
8d Common (2.5″× 0.131″)	1.75	24/16	7/16	16	6	12	130	110	105
				24	6	12	110	90	85

For SI: 1 inch = 25.4 mm, 1 mile per hour = 0.447 m/s.

a. Panel strength axis parallel or perpendicular to supports. Three-ply plywood sheathing with studs spaced more than 16 inches on center shall be applied with panel strength axis perpendicular to supports.

b. Table is based on wind pressures acting toward and away from building surfaces per Section 301.2. Lateral bracing requirements shall be in accordance with Section 602.10.

c. Wood Structural Panels with span ratings of Wall-16 or Wall-24 shall be permitted as an alternate to panels with a 24/0 span rating. Plywood siding rated 16 oc or 24 oc shall be permitted as an alternate to panels with a 24/16 span rating. Wall-16 and Plywood siding 16 oc shall be used with studs spaced a maximum of 16 inches on center.

TABLE 602.3(4)
ALLOWABLE SPANS FOR PARTICLEBOARD WALL SHEATHING[a]

THICKNESS (inch)	GRADE	STUD SPACING (inches)	
		When siding is nailed to studs	When siding is nailed to sheathing
3/8	M—1 Exterior glue	16	—
½	M—2 Exterior glue	16	16

For SI: 1 inch = 25.4 mm.

a. Wall sheathing not exposed to the weather. If the panels are applied horizontally, the end joints of the panel shall be offset so that four panels corners will not meet. All panel edges must be supported. Leave a 1/16-inch gap between panels and nail no closer than 3/8 inch from panel edges.

TABLE 602.3(5)
SIZE, HEIGHT AND SPACING OF WOOD STUDS[a]

STUD SIZE (inches)	BEARING WALLS					NONBEARING WALLS	
	Laterally unsupported stud height[a] (feet)	Maximum spacing when supporting a roof-ceiling assembly or a habitable attic assembly, only (inches)	Maximum spacing when supporting one floor, plus a roof-ceiling assembly or a habitable attic assembly (inches)	Maximum spacing when supporting two floors, plus a roof-ceiling assembly or a habitable attic assembly (inches)	Maximum spacing when supporting one floor height[a] (feet)	Laterally unsupported stud height[a] (feet)	Maximum spacing (inches)
			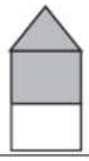		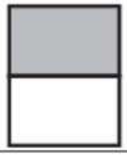		
2 × 3[b]	—	—	—	—	—	10	16
2 × 4	10	24[c]	16[c]	—	24	14	24
3 × 4	10	24	24	16	24	14	24
2 × 5	10	24	24	—	24	16	24
2 × 6	10	24	24	16	24	20	24

For SI: 1 inch = 25.4 mm, 1 foot = 304.8 mm, 1 square foot = 0.093m^2.

a. Listed heights are distances between points of lateral support placed perpendicular to the plane of the wall. Increases in unsupported height are permitted where justified by analysis.

b. Shall not be used in exterior walls.

c. A habitable attic assembly supported by 2 × 4 studs is limited to a roof span of 32 feet. Where the roof span exceeds 32 feet, the wall studs shall be increased to 2 × 6 or the studs shall be designed in accordance with accepted engineering practice.

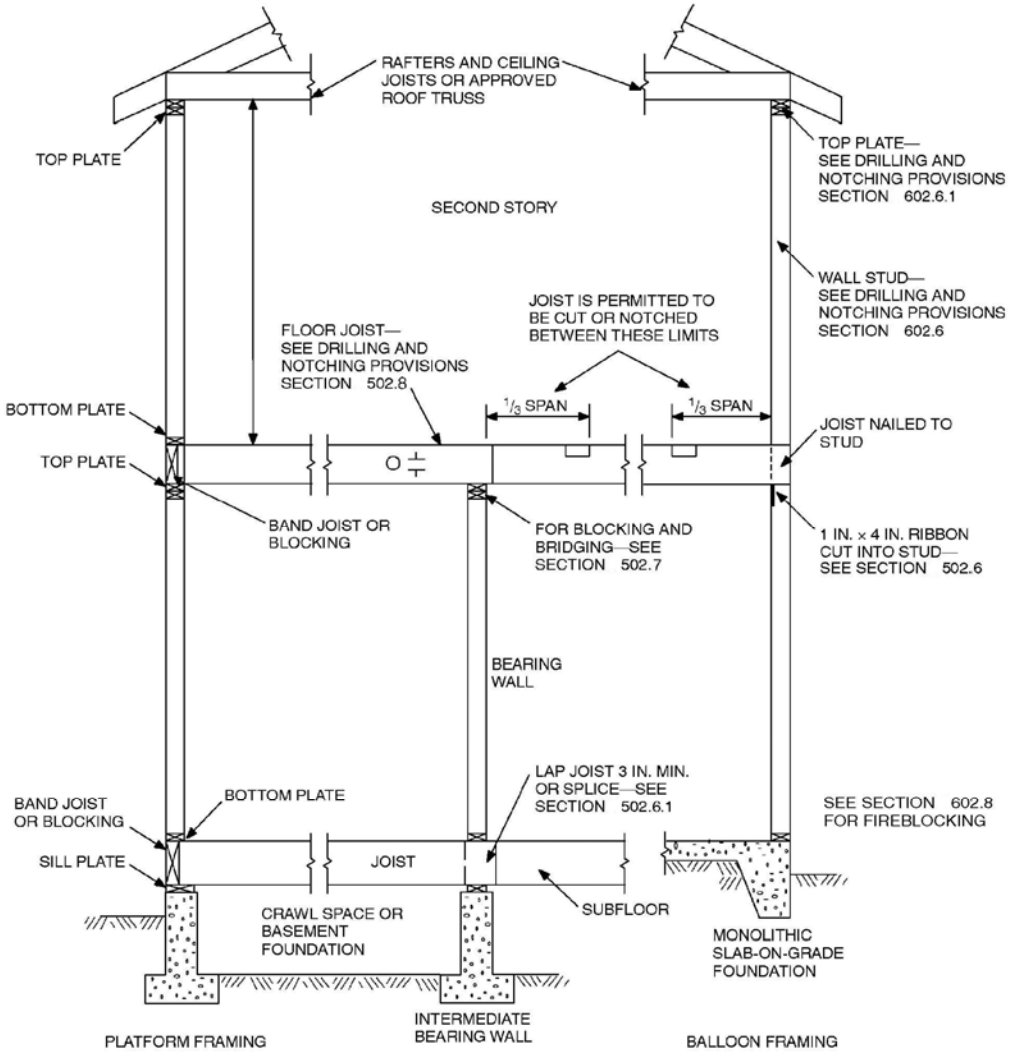

For SI: 1 inch = 25.4 mm.

FIGURE 602.3(1)
TYPICAL WALL, FLOOR AND ROOF FRAMING

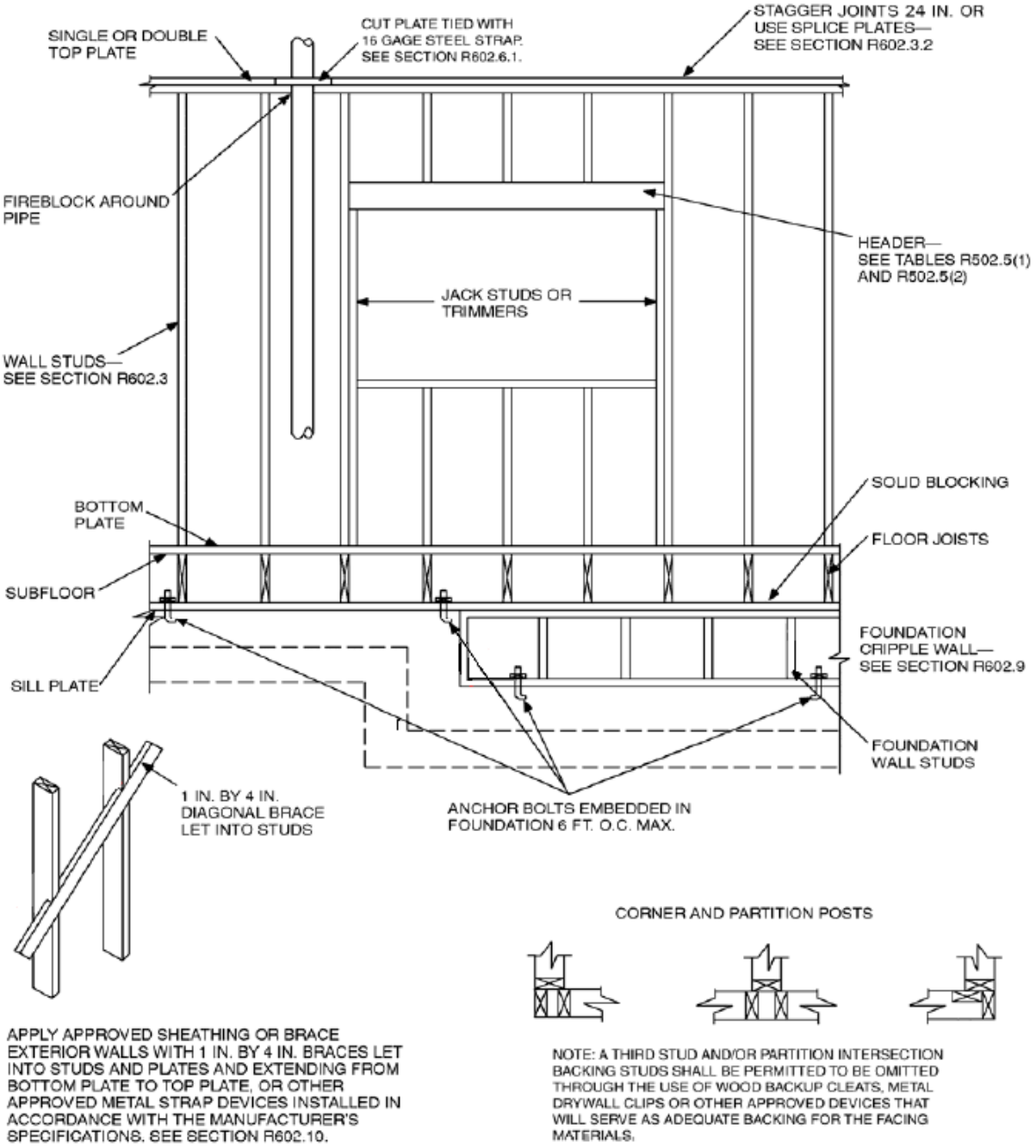

For SI: 1 inch = 25.4 mm, 1 foot = 304.8 mm.

FIGURE 602.3(2)
FRAMING DETAILS

TABLE 602.3.1
MAXIMUM ALLOWABLE LENGTH OF WOOD WALL STUDS EXPOSED TO WIND SPEEDS OF 100 mph OR LESS IN SEISMIC DESIGN CATEGORIES A, B, C, D_0, D_1 and D_2[b, c]

HEIGHT (feet)	ON-CENTER SPACING (inches)			
	24	16	12	8
Supporting a roof only				
>10	2 × 4	2 × 4	2 × 4	2 × 4
12	2 × 6	2 × 4	2 × 4	2 × 4
14	2 × 6	2 × 6	2 × 6	2 × 4
16	2 × 6	2 × 6	2 × 6	2 × 4
18	NA[a]	2 × 6	2 × 6	2 × 6
20	NA[a]	NA[a]	2 × 6	2 × 6
24	NA[a]	NA[a]	NA[a]	2 × 6
Supporting one floor and a roof				
>10	2 × 6	2 × 4	2 × 4	2 × 4
12	2 × 6	2 × 6	2 × 6	2 × 4
14	2 × 6	2 × 6	2 × 6	2 × 6
16	NA[a]	2 × 6	2 × 6	2 × 6
18	NA[a]	2 × 6	2 × 6	2 × 6
20	NA[a]	NA[a]	2 × 6	2 × 6
24	NA[a]	NA[a]	NA[a]	2 × 6
Supporting two floors and a roof				
>10	2 × 6	2 × 6	2 × 4	2 × 4
12	2 × 6	2 × 6	2 × 6	2 × 6
14	2 × 6	2 × 6	2 × 6	2 × 6
16	NA[a]	NA[a]	2 × 6	2 × 6
18	NA[a]	NA[a]	2 × 6	2 × 6
20	NA[a]	NA[a]	NA[a]	2 × 6
22	NA[a]	NA[a]	NA[a]	NA[a]
24	NA[a]	NA[a]	NA[a]	NA[a]

For SI: 1 inch = 25.4 mm, 1 foot = 304.8 mm, 1 pound per square foot = 0.0479kPa, 1 pound per square inch = 6.895 kPa, 1 mile per hour = 0.447 m/s.

a. Design required.

b. Applicability of this table assumes the following: Snow load not exceeding 25 psf, f_b not less than 1310 psi determined by multiplying the AF&PA NDS tabular base design value by the repetitive use factor, and by the size factor for all species except southern pine, E not less than 1.6×10^6 psi, tributary dimensions for floors and roofs not exceeding 6 feet, maximum span for floors and roof not exceeding 12 feet, eaves not over 2 feet in dimension and exterior sheathing. Where the conditions are not within these parameters, design is required.

c. Utility, standard, stud and No. 3 grade lumber of any species are not permitted.

(continued)

TABLE 602.3.1 - continued
MAXIMUM ALLOWABLE LENGTH OF WOOD WALL STUDS EXPOSED TO WIND SPEEDS OF 100 mph OR LESS IN SEISMIC DESIGN CATEGORIES A, B, C, D_0, D_1 and D_2[b, c]

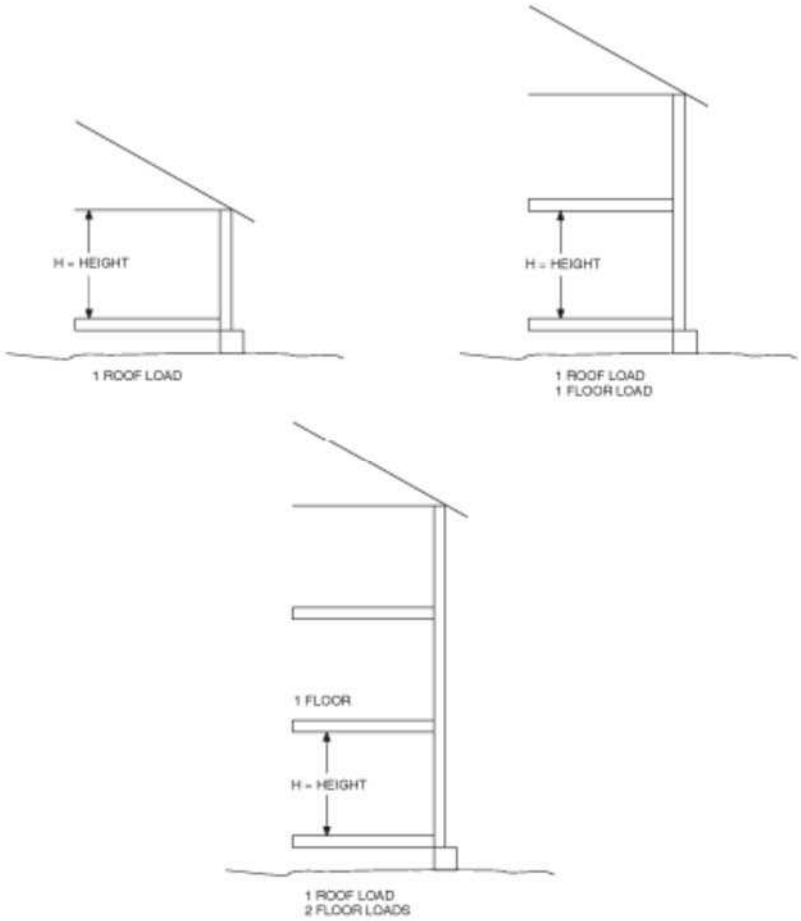

602.6 Drilling and notching–studs. Drilling and notching of studs shall be in accordance with the following:

1. Notching. Any stud in an exterior wall or bearing partition may be cut or notched to a depth not exceeding 25 percent of its width. Studs in nonbearing partitions may be notched to a depth not to exceed 40 percent of a single stud width.

2. Drilling. Any stud may be bored or drilled, provided that the diameter of the resulting hole is no more than 60 percent of the stud width, the edge of the hole is no *closer* than $^5/_8$ inch (16 mm) to the edge of the stud, and the hole is not located in the same section as a cut or notch. Studs located in exterior walls or bearing partitions drilled over 40 percent and up to 60 percent shall also be doubled with no more than two successive doubled studs bored. See Figures 602.6(1) and 602.6(2).

   Exception: Use of approved stud shoes is permitted when they are installed in accordance with the manufacturer's recommendations.

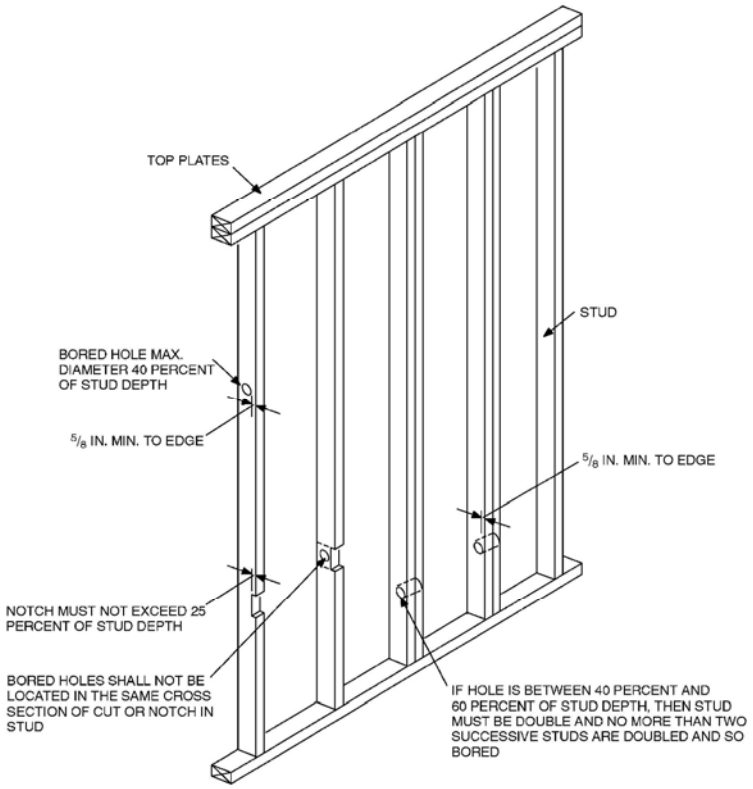

FIGURE 602.6(1)
NOTCHING AND BORED HOLE LIMITATIONS FOR EXTERIOR WALLS AND BEARING WALLS

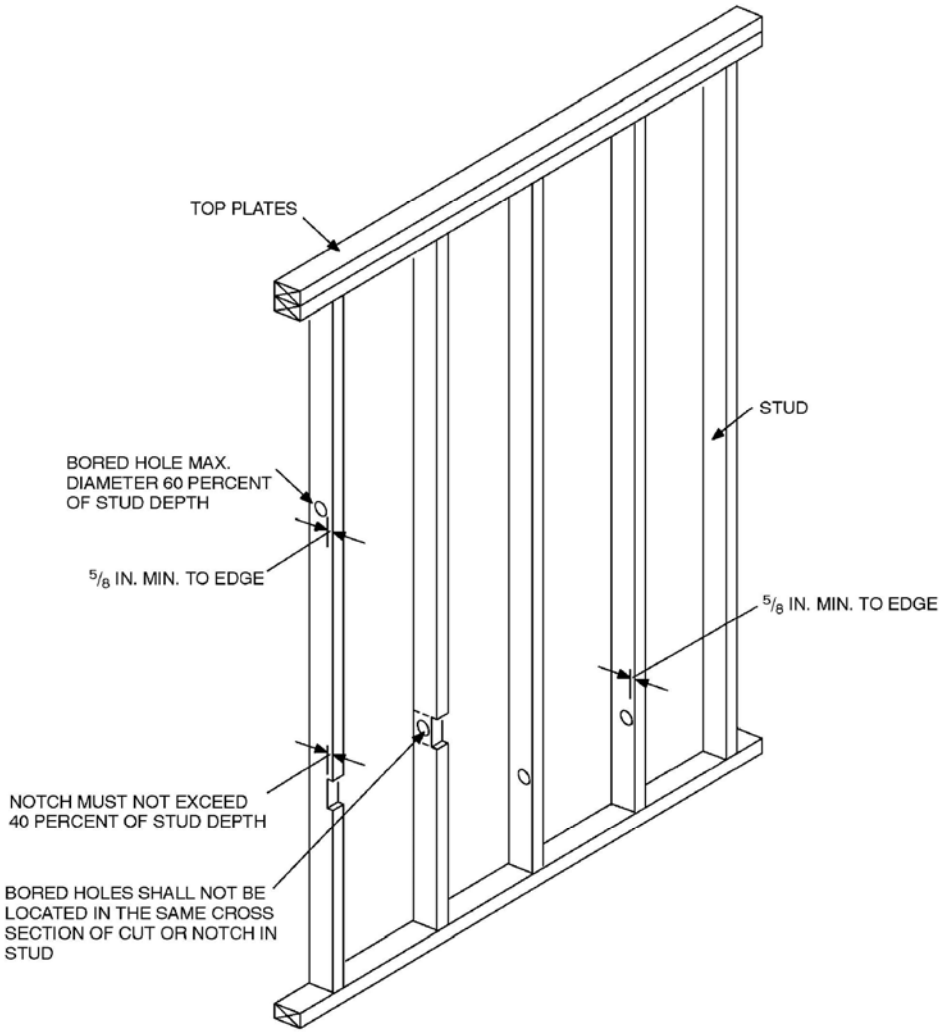

For SI: 1 inch = 25.4 mm.

FIGURE 602.6(2)
NOTCHING AND BORED HOLE LIMITATIONS FOR INTERIOR NONBEARING WALLS

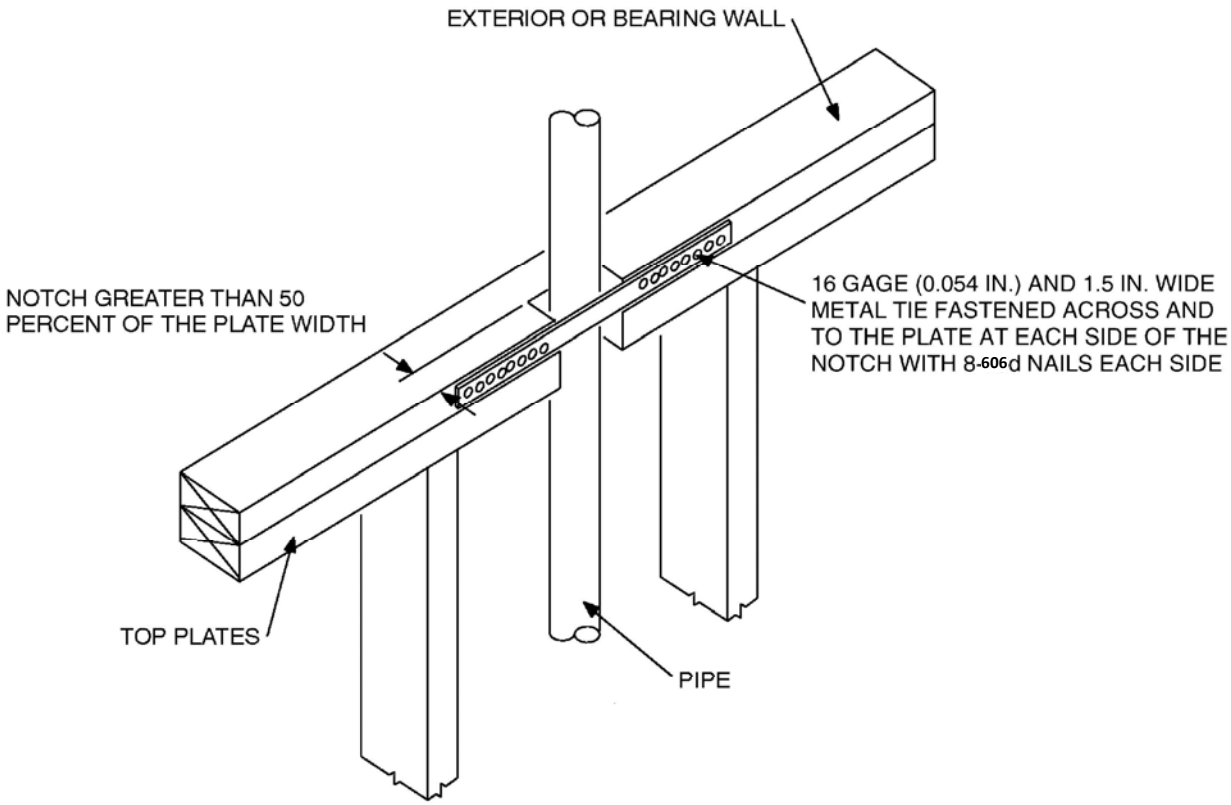

For SI: 1 inch = 25.4 mm.

FIGURE 602.6.1
TOP PLATE FRAMING TO ACCOMMODATE PIPING

602.6.1 Drilling and notching of top plate. When piping or ductwork is placed in or partly in an exterior wall or interior load-bearing wall, necessitating cutting, drilling or notching of the top plate by more than 50 percent of its width, a galvanized metal tie not less than 0.054 inch thick (1.37 mm) (16 ga) and 1½ inches (38 mm) wide shall be fastened across and to the plate at each side of the opening with not less than eight 10d (0.148 inch diameter) having a minimum length of 1½ inches (38 mm) at each side or equivalent. The metal tie must extend a minimum of 6 inches past the opening. See Figure 602.6.1.

Exception: When the entire side of the wall with the notch or cut is covered by wood structural panel sheathing.

602.7 Headers. For header spans see Tables 502.5(1) and 502.5(2).

602.7.1 Wood structural panel box headers. Wood structural panel box headers shall be constructed in accordance with Figure 602.7.2 and Table 602.7.2.

602.7.2 Nonbearing walls. Load-bearing headers are not required in interior or exterior nonbearing walls. A single flat 2-inch-by-4-inch (51 mm by 102 mm) member may be used as a header in interior or exterior nonbearing walls for openings up to 8 feet (2438 mm) in width

if the vertical distance to the parallel nailing surface above is not more than 24 inches (610 mm). For such nonbearing headers, no cripples or blocking are required above the header.

602.8 Fireblocking required. Fireblocking shall be provided in accordance with Section 302.11.

602.9 Cripple walls. Foundation cripple walls shall be framed of studs not smaller than the studding above. When exceeding 4 feet (1219 mm) in height, such walls shall be framed of studs having the size required for an additional story.

Cripple walls with a stud height less than 14 inches (356 mm) shall be sheathed on at least one side with a wood structural panel that is fastened to both the top and bottom plates in accordance with Table 602.3(1), or the cripple walls shall be constructed of solid blocking. Cripple walls shall be supported on continuous foundations.

TABLE 602.7.2
MAXIMUM SPANS FOR WOOD STRUCTURAL PANEL BOX HEADERS[a]

HEADER CONSTRUCTION[b]	HEADER DEPTH (inches)	HOUSE DEPTH (feet)				
		24	26	28	30	32
Wood structural panel—one side	9	4	4	3	3	—
	15	5	5	4	3	3
Wood structural panel—both sides	9	7	5	5	4	3
	15	8	8	7	7	6

For SI: 1 inch = 25.4 mm, 1 foot = 304.8 mm.

a. Spans are based on single story with clear-span trussed roof or two-story with floor and roof supported by interior-bearing walls.

b. See Figure 602.7.2 for construction details.

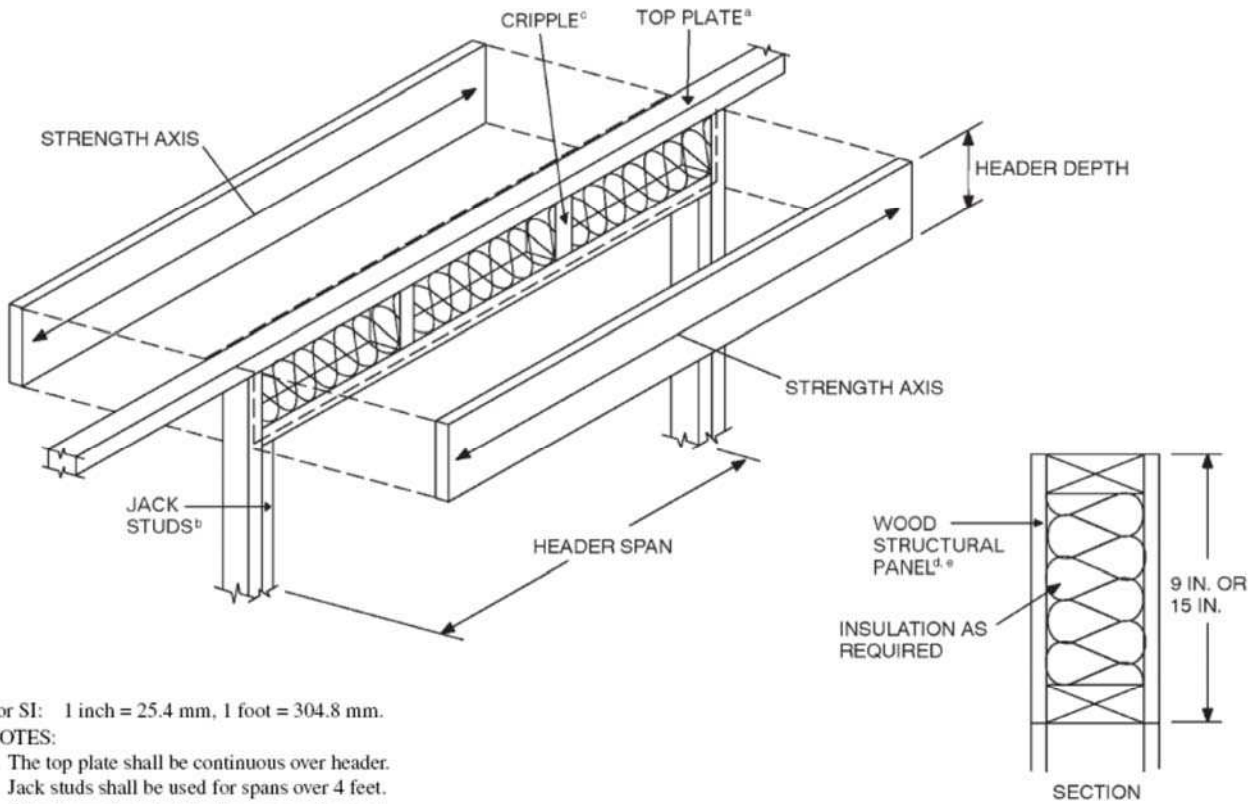

For SI: 1 inch = 25.4 mm, 1 foot = 304.8 mm.

NOTES:

a. The top plate shall be continuous over header.

b. Jack studs shall be used for spans over 4 feet.

c. Cripple spacing shall be the same as for studs.

d. Wood structural panel faces shall be single pieces of $^{15}/_{32}$-inch-thick Exposure 1 (exterior glue) or thicker, installed on the interior or exterior or both sides of the header.

e. Wood structural panel faces shall be nailed to framing and cripples with 8d common or galvanized box nails spaced 3 inches on center, staggering alternate nails $^{1}/_{2}$ inch. Galvanized nails shall be hot-dipped or tumbled.

FIGURE 602.7.2
TYPICAL WOOD STRUCTURAL PANEL BOX HEADER CONSTRUCTION

602.10 Wall bracing*. Buildings shall be braced in accordance with this section. Where a building, or portion thereof, does not comply with one or more of the bracing requirements in this section, those portions shall be designed and constructed in accordance with Section 301.1.1.*

602.10.1 Braced wall lines*. For the purpose of determining the amount and location of bracing required in each story level of a building, braced wall lines shall be designated as straight lines in the building plan placed in accordance with this section.*

602.10.1.1 Length of a braced wall line*. The length of a braced wall line shall be the distance between its ends. The end of a braced wall line shall be the intersection with a perpendicular braced wall line, an angled braced wall line as permitted in Section 602.10.1.4 or an exterior wall as shown in Figure 602.10.1.1.*

602.10.1.2 Offsets along a braced wall line. *All exterior walls parallel to a braced wall line shall be offset not more than 4 feet (1219 mm) from the designated braced wall line location as shown in Figure 602.10.1.1. Interior walls used as bracing shall be offset not*

more than 4 feet (1219 mm) from a braced wall line through the interior of the building as shown in Figure 602.10.1.1.

***602.10.1.3 Spacing of braced wall lines**. The spacing between parallel braced wall lines shall be in accordance with Table 602.10.1.3. Intermediate braced wall lines through the interior of the building shall be permitted.*

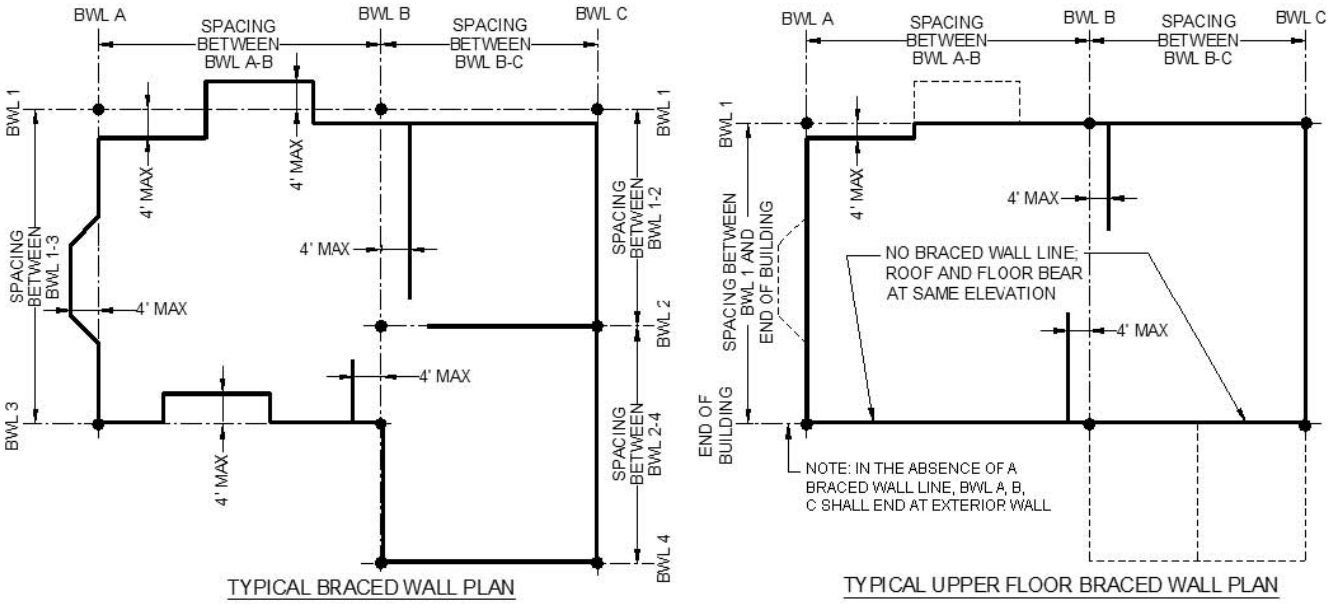

FIGURE 602.10.1.1
BRACED WALL LINES

TABLE 602.10.1.3
BRACED WALL LINE SPACING

APPLICATION	CONDITION	BUILDING TYPE	BRACED WALL LINE SPACING CRITERIA	
			Maximum Spacing	Exception to Maximum Spacing
Wind bracing	*85 mph to <110 mph*	*Detached, townhouse*	*60 feet*	*None*
Seismic bracing	*SDC A—C*	*Detached*	*Use wind bracing*	
	SDC A—B	*Townhouse*	*Use wind bracing*	
	SDC C	*Townhouse*	*35 feet*	*Up to 50 feet when length of required bracing per Table 602.10.3(3) is adjusted in accordance with Table 602.10.3(4)*
	SDC D0, D1, D2	*Detached, town-houses, one-and two-story only*	*25 feet*	*Up to 35 feet to allow for a single room not to exceed 900 sq ft. Spacing of all other braced wall lines shall not exceed 25 feet.*
	SDC D0, D1, D2	*Detached, townhouse*	*25 feet*	*Up to 35 feet when length of required bracing per Table 602.10.3(3) is adjusted in accordance with Table 602.10.3(4).*

For SI: 1 foot = 304.8 mm

***602.10.1.4 Angled walls**. Any portion of a wall along a braced wall line shall be permitted to angle out of plane for a maximum diagonal length of 8 feet (2438 mm). Where the angled*

wall occurs at a corner, the length of the braced wall line shall be measured from the projected corner as shown in Figure 602.10.1.4. Where the diagonal length is greater than 8 feet (2438 mm), it shall be considered a separate braced wall line and shall be braced in accordance with Section 602.10.1.

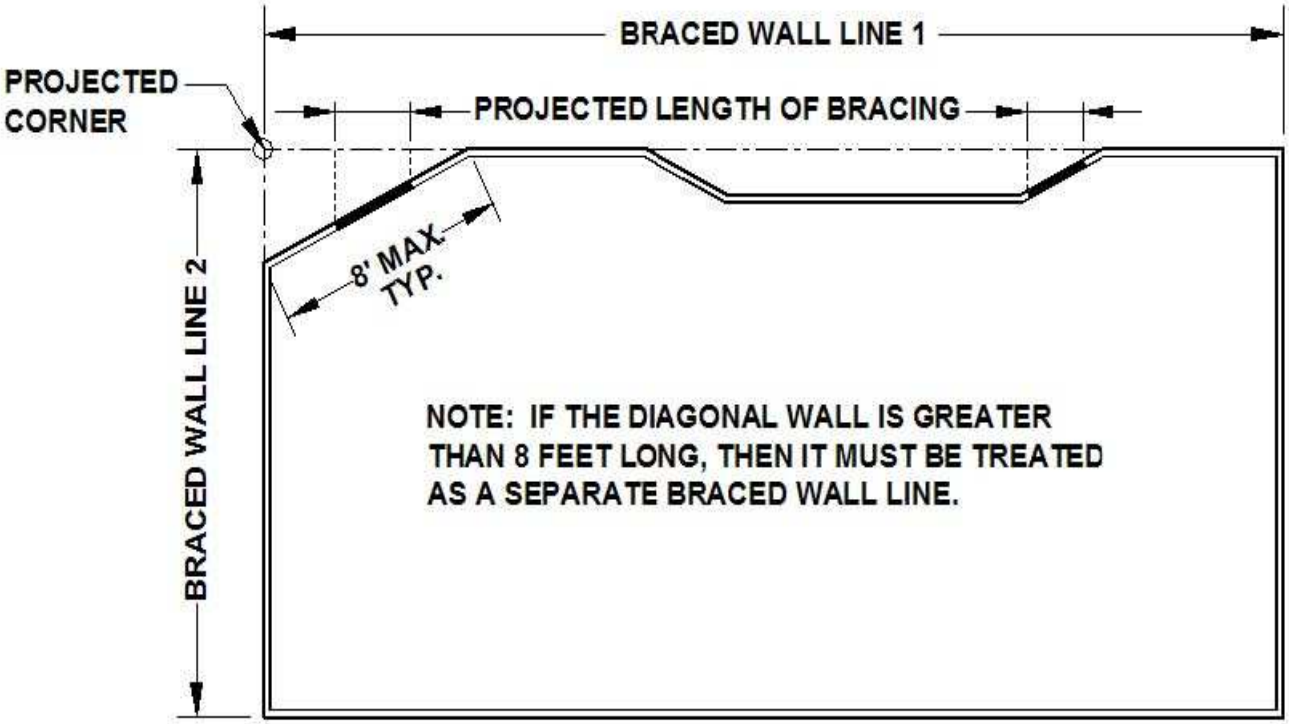

FIGURE 602.10.1.4
ANGLED WALLS

602.10.2 Braced wall panels*. Braced wall panels shall be full-height sections of wall that shall have no vertical or horizontal offsets. Braced wall panels shall be constructed and placed along a braced wall line in accordance with this section and the bracing methods specified in Section 602.10.4.*

602.10.2.1 Braced wall panel uplift load path. *The bracing lengths in Table 602.10.3(1) apply only when uplift loads are resisted in accordance with this section.*
Braced wall panels located at exterior walls that support roof rafters or trusses (including stories below top story) shall have the framing members connected in accordance with one of the following:

1. Fastening in accordance with Table 602.3(1) where:

1.1. The basic wind speed does not exceed 90 mph (40 m/s), the wind exposure category is B, the roof pitch is 5:12 or greater, and the roof span is 32 feet (9754 mm) or less, or

1.2. The net uplift value at the top of a wall does not exceed 100 plf. The net uplift value shall be determined in accordance with Section 802.11 and shall be permitted to be reduced by 60 plf (86 N/mm) for each full wall above.

2. Where the net uplift value at the top of a wall exceeds 100 plf (146 N/mm), installing approved uplift framing connectors to provide a continuous load path from the top of the wall to the foundation. The net uplift value shall be as determined in Item 1.2 above.

3. Bracing and fasteners designed in accordance with accepted engineering practice to resist combined uplift and shear forces.

***602.10.2.2 Locations of braced wall panels**. A braced wall panel shall begin within 10 feet (3810 mm) from each end of a braced wall line as determined in Section 602.10.1.1. The distance between adjacent edges of braced wall panels along a braced wall line shall be no greater than 20 feet (6096 mm) as shown in Figure 602.10.2.2.*

***602.10.2.2.1 Location of braced wall panels in Seismic Design Categories D_0, D_1 and D_2.** Braced wall panels shall be located at each end of a braced wall line.*

***Exception:** Braced wall panels constructed of Methods WSP or BV-WSP and continuous sheathing methods as specified in Section 602.10.4 shall be permitted to begin no more than 10 feet (3048 mm) from each end of a braced wall line provided each end complies with one of the following.*

1. A minimum 24 inch wide (610 mm) panel for Methods WSP, BV-WSP, CS-WSP, CS-G, CS-PF and 32 inch (813 mm) wide panel for Method CS-SFB is applied to each side of the building corner as shown in Condition 4 of Figure 602.10.7.

2. The end of each braced wall panel closest to the end of the braced wall line shall have an 1,800 lb (8 kN) hold-down device fastened to the stud at the edge of the braced wall panel closest to the corner and to the foundation or framing below as shown in Condition 5 of Figure 602.10.7.

3. For Method BV-WSP, hold-down devices shall be provided in accordance with Table 602.10.6.5 at the ends of each braced wall panel.

***602.10.2.3 Minimum number of braced wall panels**. Braced wall lines with a length of 16 feet (4877 mm) or less shall have a minimum of two braced wall panels of any length or one braced wall panel equal to 48 inches (1219 mm) or more. Braced wall lines greater than 16 feet (4877 mm) shall have a minimum of two braced wall panels.*

***602.10.3 Required length of bracing.** The required length of bracing along each braced wall line shall be determined as follows.*

1. *All buildings in Seismic Design Categories A and B shall use Table 602.10.3(1) and the applicable adjustment factors in Table 602.10.3(2).*

2. *Detached buildings in Seismic Design Category C shall use Table 602.10.3(1) and the applicable adjustment factors in Table 602.10.3(2).*

3. *Townhouses in Seismic Design Category C shall use the greater value determined from Table 602.10.3(1) or 602.10.3(3) and the applicable adjustment factors in Table 602.10.3(2) or 602.10.3(4) respectively.*

4. *All buildings in Seismic Design Categories D_0, D_1 and D_2 shall use the greater value determined from Table 602.10.3(1) or 602.10.3(3) and the applicable adjustment factors in Table 602.10.3(2) or 602.10.3(4) respectively.*

Only braced wall panels parallel to the braced wall line shall contribute towards the required length of bracing of that braced wall line. Braced wall panels along an angled wall meeting the minimum length requirements of Tables 602.10.5 and 602.10.5.2 shall be permitted to contribute its projected length towards the minimum required length of bracing for the braced wall line as shown in Figure 602.10.1.4. Any braced wall panel on an angled wall at the end of a braced wall line shall contribute its projected length for only one of the braced wall lines at the projected corner.

***Exception**: The length of wall bracing for dwellings in Seismic Design Categories D_0, D_1 and D_2 with stone or masonry veneer installed per Section 703.7 and exceeding the first story height shall be in accordance with Section 602.10.6.5.*

***602.10.4 Construction methods for braced wall panels**. Intermittent and continuously sheathed braced wall panels shall be constructed in accordance with this section and the methods listed in Table 602.10.4.*

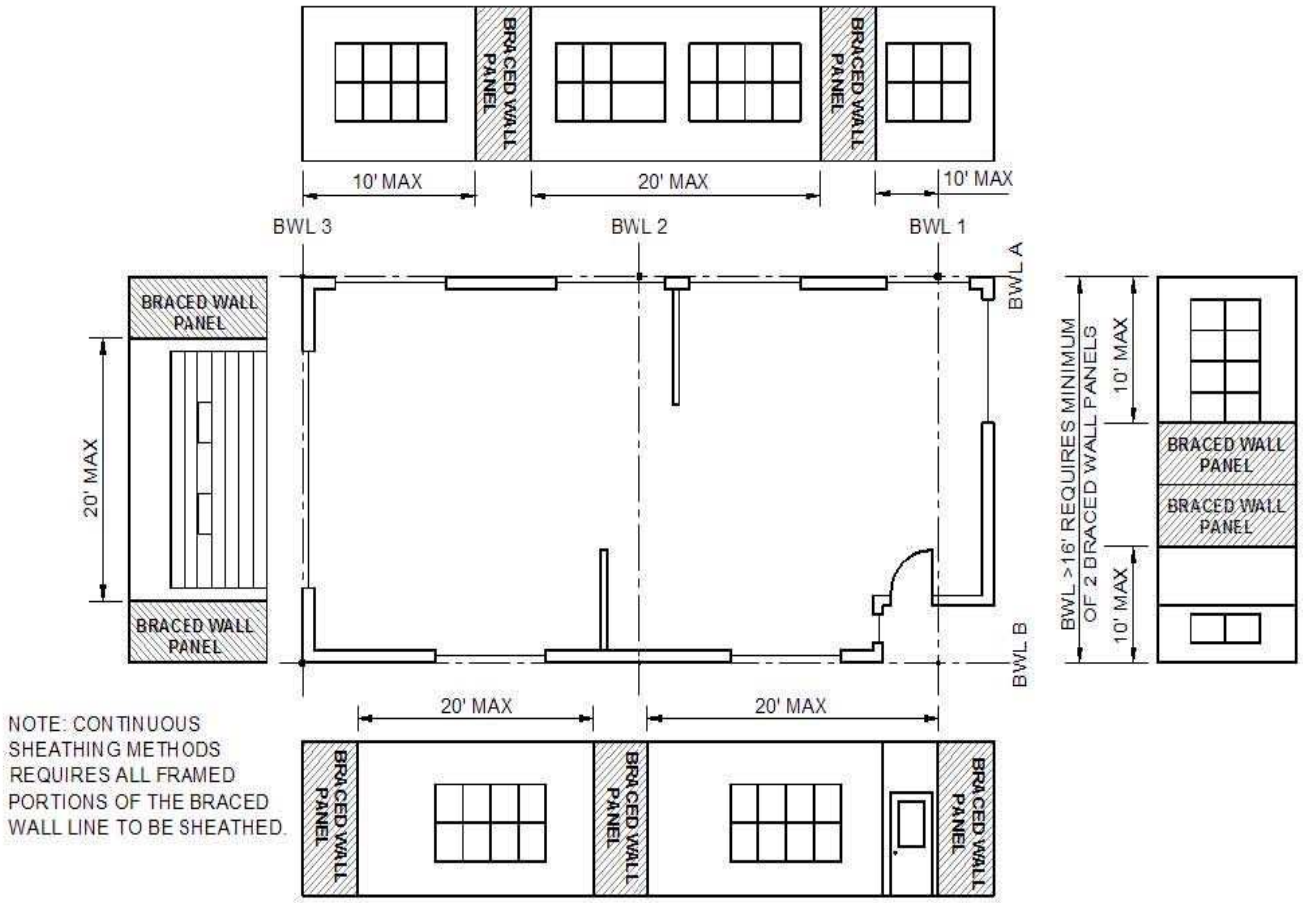

For SI: 1 foot= 304.8 mm.

FIGURE 602.10.2.2
LOCATION OF BRACED WALL PANELS

TABLE 602.10.3(1)
BRACING REQUIREMENTS BASED ON WIND SPEED

• EXPOSURE CATEGORY B • 30 FT MEAN ROOF HEIGHT • 10 FT EAVE TO RIDGE HEIGHT • 10 FT WALL HEIGHT 2 BRACED • WALL LINES			MINIMUM TOTAL LENGTH (FEET) OF BRACED WALL PANELS REQUIRED ALONG EACH BRACED WALL LINE [a]			
Basic Wind Speed (mph)	**Story Location**	**Braced Wall Line Spacing (feet)**	**Method LIB[b]**	**Method GB**	**Methods DWB, WSP, SFB, PBS, PCP, HPS, CS-SFB[c]**	**Methods CS-WSP, CS-G, CS-PF**
≤ 85	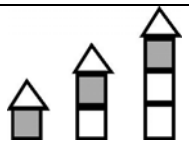	10	3.5	3.5	2.0	1.5
		20	6.0	6.0	3.5	3.0
		30	8.5	8.5	5.0	4.5
		40	11.5	11.5	6.5	5.5
		50	14.0	14.0	8.0	7.0
		60	16.5	16.5	9.5	8.0
	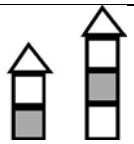	10	6.5	6.5	3.5	3.0
		20	11.5	11.5	6.5	5.5
		30	16.5	16.5	9.5	8.0
		40	21.5	21.5	12.5	10.5
		50	26.5	26.5	15.0	13.0
		60	31.5	31.5	18.0	15.5
	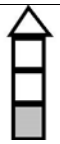	10	NP	9.0	5.5	4.5
		20	NP	17.0	10.0	8.5
		30	NP	24.5	14.0	12.0
		40	NP	32.0	18.0	15.5
		50	NP	39.0	22.5	19.0
		60	NP	46.5	26.5	22.5
≤ 90	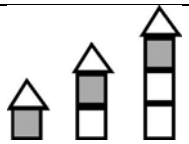	10	3.5	3.5	2.0	2.0
		20	7.0	7.0	4.0	3.5
		30	9.5	9.5	5.5	5.0
		40	12.5	12.5	7.5	6.0
		50	15.5	15.5	9.0	7.5
		60	18.5	18.5	10.5	9.0
	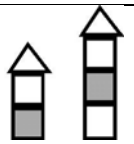	10	7.0	7.0	4.0	3.5
		20	13.0	13.0	7.5	6.5
		30	18.5	18.5	10.5	9.0
		40	24.0	24.0	14.0	12.0
		50	29.5	29.5	17.0	14.5
		60	35.0	35.0	20.0	17.0
	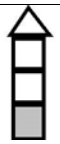	10	NP	10.5	6.0	5.0
		20	NP	19.0	11.0	9.5
		30	NP	27.5	15.5	13.5
		40	NP	35.5	20.5	17.5
		50	NP	44.0	25.0	21.5
		60	NP	52.0	30.0	25.5

(continued)

TABLE 602.10.3(1)—continued
BRACING REQUIREMENTS BASED ON WIND SPEED

• EXPOSURE CATEGORY B • 30 FT MEAN ROOF HEIGHT • 10 FT EAVE TO RIDGE HEIGHT • 10 FT WALL HEIGHT • 2 BRACED WALL LINES			MINIMUM TOTAL LENGTH (FEET) OF BRACED WALL PANELS REQUIRED ALONG EACH BRACED WALL LINE a			
Basic Wind Speed (mph)	**Story Location**	**Braced Wall Line Spacing (feet)**	**Method LIB[b]**	**Method GB**	**Methods DWB, WSP, SFB, PBS, PCP, HPS, CS-SFB[c]**	**Methods CS-WSP, CS-G, CS-PF**
≤ 100		10	4.5	4.5	2.5	2.5
		20	8.5	8.5	5.0	4.0
		30	12.0	12.0	7.0	6.0
		40	15.5	15.5	9.0	7.5
		50	19.0	19.0	11.0	9.5
		60	22.5	22.5	13.0	11.0
	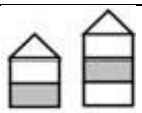	10	8.5	8.5	5.0	4.5
		20	16.0	16.0	9.0	8.0
		30	23.0	23.0	13.0	11.0
		40	29.5	29.5	17.0	14.5
		50	36.5	36.5	21.0	18.0
		60	43.5	43.5	25.0	21.0
		10	NP	12.5	7.5	6.0
		20	NP	23.5	13.5	11.5
		30	NP	34.0	19.5	16.5
		40	NP	44.0	25.0	21.5
		50	NP	54.0	31.0	26.5
		60	NP	64.0	36.5	31.0
< 110[c]	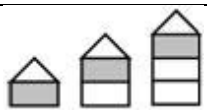	10	5.5	5.5	3.0	3.0
		20	10.0	10.0	6.0	5.0
		30	14.5	14.5	8.5	7.0
		40	18.5	18.5	11.0	9.0
		50	23.0	23.0	13.0	11.5
		60	27.5	27.5	15.5	13.5
	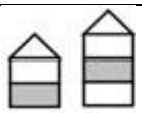	10	10.5	10.5	6.0	5.0
		20	19.0	19.0	11.0	9.5
		30	27.5	27.5	16.0	13.5
		40	36.0	36.0	20.5	17.5
		50	44.0	44.0	25.5	21.5
		60	52.5	52.5	30.0	25.5
		10	NP	15.5	9.0	7.5
		20	NP	28.5	16.5	14.0
		30	NP	41.0	23.5	20.0
		40	NP	53.0	30.5	26.0
		50	NP	65.5	37.5	32.0
		60	NP	77.5	44.5	37.5

For SI: 1 inch = 25.4 mm, 1 foot = 305 mm.
a. Linear interpolation shall be permitted.
b. Method LIB shall have gypsum board fastened to at least one side with nails or screws in accordance with Table 602.3(1) for exterior sheathing or Table 702.3.5 for interior gypsum board. Spacing of fasteners at panel edges shall not exceed 8 inches (203 mm).
c. Method CS-SFB does not apply where the wind speed is greater than 100 mph.

TABLE 602.10.3(2)
WIND ADJUSTMENT FACTORS TO THE REQUIRED LENGTH OF WALL BRACING

ADJUSTMENT BASED ON	STORY/ SUPPORTING	CONDITION	ADJUSTMENT FACTOR [a,b] (multiply length from Table 602.10.3(1) by this factor)	APPLICABLE METHODS
Exposure category	One story structure	B C D	1.00 1.20 1.50	All methods
	Two-story structure	B C D	1.00 1.30 1.60	
	Three-story structure	B C D	1.00 1.40 1.70	
Roof eave-to-ridge height	Roof only	≤ 5 ft 10 ft 15 ft 20 ft	0.70 1.00 1.30 1.60	
	Roof + 1 floor	≤ 5 ft 10 ft 15 ft 20 ft	0.85 1.00 1.15 1.30	
	Roof + 2 floors	≤ 5 ft 10 ft 15 ft 20 ft	0.90 1.00 1.10 Not permitted	
Wall height adjustment	Any story	8 ft 9 ft 10 ft 11 ft 12 ft	0.90 0.95 1.00 1.05 1.10	
Number of braced wall lines (per plan direction)[C]	Any story	2 3 4 ≤ 5	1.00 1.30 1.45 1.60	
Additional 800 lb hold-down device	Top story only	Fastened to the end studs of each braced wall panel and to the foundation or framing below	0.80	DWB, WSP, SFB, PBS, PCP, HPS
Interior gypsum board finish (or equivalent)	Any story	Omitted from inside face of braced wall panels	1.40	DWB, WSP, SFB,PBS, PCP, HPS, CS-WSP, CS-G, CS-SFB
Gypsum board fastening	Any story	4 in. o.c. at panel edges, including top and bottom plates, and all horizontal joints blocked	0.7	GB

For SI: 1 foot = 305 mm, 1 lb =4.48 N.
a. Linear Interpolation shall be permitted.
b. The total adjustment factor is the product of all applicable adjustment factors.
c. The adjustment factor is permitted to be 1.0 when determining bracing amounts for intermediate braced wall lines provided the bracing amounts on adjacent braced wall lines are based on a spacing and number that neglects the intermediate braced wall line.

TABLE 602.10.3(3)
BRACING REQUIREMENTS BASED ON SEISMIC DESIGN CATEGORY

• SOIL CLASS D [b] • WALL HEIGHT = 10 FT • 10 PSF FLOOR DEAD LOAD • 15 PSF ROOF/CEILING DEAD LOAD • BRACED WALL LINE SPACING ≤ 25 FT			MINIMUM TOTAL LENGTH (FEET) OF BRACED WALL PANELS REQUIRED ALONG EACH BRACED WALL LINE [a]				
Seismic Design Category	**Story Location**	**Braced Wall Line Length (ft)**	**Method LIB [c]**	**Method GB**	**Methods DWB, SFB, PBS, PCP, HPS, CS-SFB [d]**	**Method WSP**	**Methods CS-WSP, CS-G**
C (townhouses only)	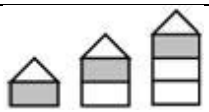	10	2.5	2.5	2.5	1.6	1.4
		20	5.0	5.0	5.0	3.2	2.7
		30	7.5	7.5	7.5	4.8	4.1
		40	10.0	10.0	10.0	6.4	5.4
		50	12.5	12.5	12.5	8.0	6.8
	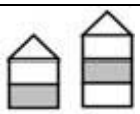	10	NP	4.5	4.5	3.0	2.6
		20	NP	9.0	9.0	6.0	5.1
		30	NP	13.5	13.5	9.0	7.7
		40	NP	18.0	18.0	12.0	10.2
		50	NP	22.5	22.5	15.0	12.8
		10	NP	6.0	6.0	4.5	3.8
		20	NP	12.0	12.0	9.0	7.7
		30	NP	18.0	18.0	13.5	11.5
		40	NP	24.0	24.0	18.0	15.3
		50	NP	30.0	30.0	22.5	19.1
D^0		10	NP	2.8	2.8	1.8	1.6
		20	NP	5.5	5.5	3.6	3.1
		30	NP	8.3	8.3	5.4	4.6
		40	NP	11.0	11.0	7.2	6.1
		50	NP	13.8	13.8	9.0	7.7
	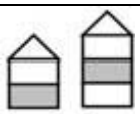	10	NP	5.3	5.3	3.8	3.2
		20	NP	10.5	10.5	7.5	6.4
		30	NP	15.8	15.8	11.3	9.6
		40	NP	21.0	21.0	15.0	12.8
		50	NP	26.3	26.3	18.8	16.0
		10	NP	7.3	7.3	5.3	4.5
		20	NP	14.5	14.5	10.5	9.0
		30	NP	21.8	21.8	15.8	13.4
		40	NP	29.0	29.0	21.0	17.9
		50	NP	36.3	36.3	26.3	22.3

(continued)

TABLE 602.10.3(3)—continued
BRACING REQUIREMENTS BASED ON SEISMIC DESIGN CATEGORY

D[1]	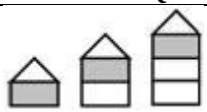	*10*	*NP*	*3.0*	*3.0*	*2.0*	*1.7*
		20	*NP*	*6.0*	*6.0*	*4.0*	*3.4*
		30	*NP*	*9.0*	*9.0*	*6.0*	*5.1*
		40	*NP*	*12.0*	*12.0*	*8.0*	*6.8*
		50	*NP*	*15.0*	*15.0*	*10.0*	*8.5*
	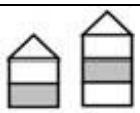	*10*	*NP*	*6.0*	*6.0*	*4.5*	*3.8*
		20	*NP*	*12.0*	*12.0*	*9.0*	*7.7*
		30	*NP*	*18.0*	*18.0*	*13.5*	*11.5*
		40	*NP*	*24.0*	*24.0*	*18.0*	*15.3*
		50	*NP*	*30.0*	*30.0*	*22.5*	*19.1*
		10	*NP*	*8.5*	*8.5*	*6.0*	*5.1*
		20	*NP*	*17.0*	*17.0*	*12.0*	*10.2*
		30	*NP*	*25.5*	*25.5*	*18.0*	*15.3*
		40	*NP*	*34.0*	*34.0*	*24.0*	*20.4*
		50	*NP*	*42.5*	*42.5*	*30.0*	*25.5*
D[2]	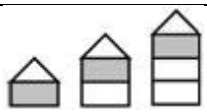	*10*	*NP*	*4.0*	*4.0*	*2.5*	*2.1*
		20	*NP*	*8.0*	*8.0*	*5.0*	*4.3*
		30	*NP*	*12.0*	*12.0*	*7.5*	*6.4*
		40	*NP*	*16.0*	*16.0*	*10.0*	*8.5*
		50	*NP*	*20.0*	*20.0*	*12.5*	*10.6*
	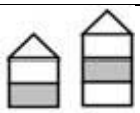	*10*	*NP*	*7.5*	*7.5*	*5.5*	*4.7*
		20	*NP*	*15.0*	*15.0*	*11.0*	*9.4*
		30	*NP*	*22.5*	*22.5*	*16.5*	*14.0*
		40	*NP*	*30.0*	*30.0*	*22.0*	*18.7*
		50	*NP*	*37.5*	*37.5*	*27.5*	*23.4*
		10	*NP*	*NP*	*NP*	*NP*	*NP*
		20	*NP*	*NP*	*NP*	*NP*	*NP*
		30	*NP*	*NP*	*NP*	*NP*	*NP*
		40	*NP*	*NP*	*NP*	*NP*	*NP*
		50	*NP*	*NP*	*NP*	*NP*	*NP*
	Cripple wall below one- or two-story dwelling	*10*	*NP*	*NP*	*NP*	*7.5*	*6.4*
		20	*NP*	*NP*	*NP*	*15.0*	*12.8*
		30	*NP*	*NP*	*NP*	*22.5*	*19.1*
		40	*NP*	*NP*	*NP*	*30.0*	*25.5*
		50	*NP*	*NP*	*NP*	*37.5*	*31.9*

For SI: 1 foot 305 mm

a. Linear interpolation shall be permitted.

b. Wall bracing lengths are based on a soil site class "D." Interpolation of bracing length between the S_{ds} values associated with the Seismic Design Categories shall be permitted when a site-specific S_{ds} value is determined in accordance with Section 1613.5 of the building code.

c. Method LIB shall have gypsum board fastened to at least one side with nails or screws per Table 602.3(1) for exterior sheathing or Table 702.3.5 for interior gypsum board. Spacing of fasteners at panel edges shall not exceed 8 inches (203 mm).

d. Method CS-SFB applies in SDC C only.

TABLE 602.10.3(4)
SEISMIC ADJUSTMENT FACTORS TO THE REQUIRED LENGTH OF WALL BRACING

ADJUSTMENT BASED ON:	STORY/SUPPORTING	Condition	ADJUSTMENT FACTOR [a,b] (Multiply length from Table 602.10.3(1) by this factor)	APPLICABLE METHODS
Story height (Section 301.3)	Any story	≤10 ft >10 ft and ≤12 ft	1.0 1.2	All methods
Braced wall line spacing, townhouses in SDC C	Any story	≤35 ft >35 ft and ≤ 50 ft	1.0 1.43	
Braced wall line spacing, in SDC D0, D1, D2 [,c]	Any story	> 25 ft and ≤ 30 ft >30 ft and ≤ 35 ft	1.2 1.4	
Wall dead load	Any story	>8 psf and< 15 psf <8 psf	1.0 0.85	
Roof/ceiling dead load for wall supporting	Roof only or roof plus one or two stories	≤15 psf	1.0	
	Roof plus one or two stories	>15 psf and ≤ 25 psf	1.1	
	Roof only	>15 psf and ≤ 25 psf	1.2	
Walls with stone or masonry veneer, town-houses in SDC[d,e]		1.0		All intermittent & continuous methods
	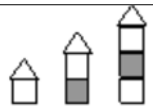	1.5		
		1.5		
Walls with stone or masonry veneer, detached one-~~and~~ , two-, and three-family dwellings in SDC D_0-D_2 [d]	Any story	See Table R602.10.6.5		BV-WSP
Interior gypsum board finish (or equivalent)	Any story	Omitted from inside face of braced wall panels	1.5	DWB, WSP, SFB, PBS, PCP, HPS, CS-WSP, CS-G, CS-SFB

For SI: 1 psf = 47.8 N/m^2.

a. Linear interpolation shall be permitted.

b. The total length of bracing required for a given wall line is the product of all applicable adjustment factors.

c. The length-to-width ratio for the floor/roof diaphragm shall not exceed 3:1. The top plate lap splice nailing shall be a minimum of 12-16d nails on each side of the splice.

d. Applies to stone or masonry veneer exceeding the first story height. See Section 602.10.6.5 for requirements when stone or masonry veneer does not exceed the first story height.

e. The adjustment factor for stone or masonry veneer shall be applied to all exterior braced wall lines and all braced wall lines on the interior of the building, backing or perpendicular to and laterally supported veneered walls.

TABLE 602.10.4
BRACING METHODS

	METHODS, MATERIAL	MINIMUM THICKNESS	FIGURE	CONNECTION CRITERIA [a]	
				Fasteners	Spacing
Intermittent Bracing Method	**LIB** Let-in-bracing	1 × 4 wood or approved metal straps at 45° to 60° angles for maximum 16" stud spacing		Wood: 2-8d common nails or 3-8d (21/2" long x 0.113" dia.) nails	Wood: per stud and top and bottom plates
				Metal strap: per manufacturer	Metal: per manufacturer
	DWB Diagonal wood boards	3/4"(1" nominal) for maximum 24" stud spacing	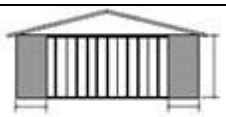	2-8d (21/2" long × 0.113" dia.) nails or 2 -13/4" long staples	Per stud
	WSP Wood structural panel (See Section 604)	3/8 "		Exterior sheathing per Table 602.3(3)	6" edges 12" field
				Interior sheathing per Table 602.3(1) or 602.3(2)	Varies by fastener
	BV-WSP[e] Wood Structural Panels with Stone or Masonry Veneer (See Section 602.10.6.5)	7/16 "	See Figure 602.10.6.5	8d common (21/2" × 0.131) nails	4" at panel edges12" at intermediate supports 4" at braced wall panel end posts
	SFB Structural fiberboard sheathing	1/2" or 25/32" for maximum 16" stud spacing		11/2" long × 0.12" dia. (for 1/2" thick sheathing) 13/4 " long × 0.12" dia. (for 25/32 " thick sheathing) galvanized roofing nails or 8d common (21/2" long × 0.131" dia.) nails	3" edges 6" field
	GB Gypsum board	1/2 "		Nails or screws per Table 602.3(1) for exterior locations	For all braced wall panel locations: 7" edges (including top and bottom plates) 7" field
				Nails or screws per Table 702.3.5 for interior locations	
	PBS Particleboard sheathing (See Section 605)	3/8" or 1/2 " for maximum16" stud spacing	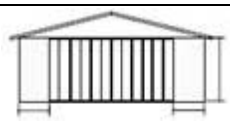	For 3/8", 6d common (2" long × 0.113" dia.) nails For 1/2", 8d common (21/2" long × 0.131" dia.) nails	3" edges 6" field
	PCP Portland cement plaster	See Section 703.6 for maximum 16" stud spacing	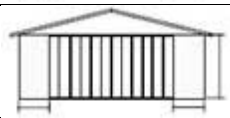	11/2" long, 11 gage, 7/16" dia. head nails or 7/8" long, 16 gage staples	6" o.c. on all framing members
	HPS Hardboard panel siding	7/16" for maximum 16" stud spacing	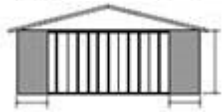	0.092" dia., 0.225" dia. head nails with length to accommodate 11/2 " penetration into studs	4" edges 8" field
	ABW Alternate braced wall	3/8 "		See Section 602.10.6.1	See Section 602.10.6.1

(continued)

TABLE 602.10.4—continued
BRACING METHODS

METHODS, MATERIAL		MINIMUM THICKNESS	FIGURE	CONNECTION CRITERIA [a]	
				Fasteners	Spacing
Intermittent Bracing Method	**PFH** *Portal frame with hold-downs*	*3/8 "*	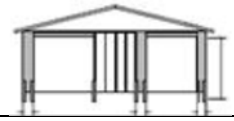	*See Section 602.10.6.2*	*See Section 602.10.6.2*
Intermittent Bracing Method	**PFG** *Portal frame at garage*	*7/16 "*	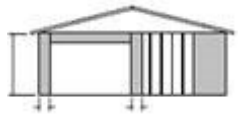	*See Section 602.10.6.3*	*See Section 602.10.6.3*
Continuous Sheathing Methods	**CS-WSP** *Continuously sheathed wood structural panel*	*3/8 "*	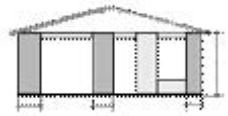	*Exterior sheathing per Table 602.3(3)*	*6" edges 12" field*
				Interior sheathing per Table R602.3(1) or R602.3(2)	*Varies by fastener*
Continuous Sheathing Methods	**CS-G** [b,c] *Continuously sheathed wood structural panel adjacent to garage openings*	*3/8 "*	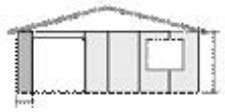	*See Method CS-WSP*	*See Method CS-WSP*
Continuous Sheathing Methods	**CS-PF** *Continuously sheathed portal frame*	*7/16 "*	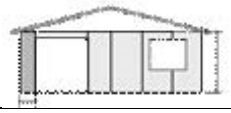	*See Section 602.10.6.4*	*See Section 602.10.6.4*
Continuous Sheathing Methods	**CS-SFB** [d] *Continuously sheathed structural fiberboard*	*1/2" or 25/32" for maximum 16" stud spacing*	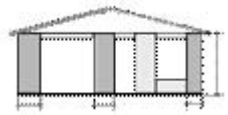	*11/2" long × 0.12" dia. (for 1/2" thick sheathing) 13/4" long × 0.12" dia. (for 25/32" thick sheathing) galvanized roofing nails or 8d common (21/2" long × 0.131" dia.) nails*	*3" edges 6" field*

For SI: 1 inch = 25.4 mm, 1 foot = 305 mm.

a. Adhesive attachment of wall sheathing, including Method GB, shall not be permitted in Seismic Design Categories C, D0, D1 and D2.

b. Applies to panels next to garage door opening when supporting gable end wall or roof load only. May only be used on one wall of the garage. In Seismic Design Categories D0, D1, and D2, roof covering dead load may not exceed 3 psf (0.14 kN/m^2).

c. Garage openings adjacent to a Method CS-G panel shall be provided with a header in accordance with Table 502.5(1). A full height clear opening shall not be permitted adjacent to a Method CS-G panel.

d. Method CS-SFB does not apply in Seismic Design Categories D0, D1 and D2 and in areas where the wind speed exceeds 100 mph.

e. Method applies to detached one- and two-family dwellings in Seismic Design Categories D0-D2 only.

***602.10.4.1 Mixing methods**. Mixing of bracing methods shall be permitted as follows:*

1. *Mixing intermittent bracing and continuous sheathing methods from story to story shall be permitted.*

2. *Mixing intermittent bracing methods from braced wall line to braced wall line within a story shall be permitted. Within Seismic Design Categories A, B and C or in regions where the basic wind speed is less than or equal to 100 mph, mixing of intermittent bracing and continuous sheathing methods from braced wall line to braced wall line within a story shall be permitted.*

3. *Mixing intermittent bracing methods along a braced wall line shall be permitted in Seismic Design Categories A and B, and detached dwellings in Seismic Design Category C provided the length of required bracing in accordance with Table 602.10.3(1) or 602.10.3(3) is the highest value of all intermittent bracing methods used.*

4. *Mixing of continuous sheathing methods CSWSP, CS-G and CS-PF along a braced wall line shall be permitted.*

5. *In Seismic Design Categories A and B, and for detached one- and two-family dwellings in Seismic Design Category C, mixing of intermittent bracing methods along the interior portion of a braced wall line with continuous sheathing methods CS-WSP, CS-G and CS-PF along the exterior portion of the same braced wall line shall be permitted. The length of required bracing shall be the highest value of all intermittent bracing methods used in accordance with Table 602.10.3(1) or 602.10.3(3) as adjusted by Tables 602.10.3(2) and 602.10.3(4), respectively. The requirements of Section 602.10.7 shall apply to each end of the continuously sheathed portion of the braced wall line.*

602.10.4.2 Continuous sheathing methods*. Continuous sheathing methods require structural panel sheathing to be used on all sheathable surfaces on one side of a braced wall line including areas above and below openings and gable end walls and shall meet the requirements of Section 602.10.7.*

602.10.4.3 Braced wall panel interior finish material. *Braced wall panels shall have gypsum wall board installed on the side of the wall opposite the bracing material. Gypsum wall board shall be not less than ½ inch (12.7 mm) in thickness and be fastened with nails or screws in accordance with Table 602.3(1) for exterior sheathing or Table 702.3.5 for interior gypsum wall board. Spacing of fasteners at panel edges for gypsum wall board opposite Method LIB bracing shall not exceed 8 inches (203 mm). Interior finish material shall not be glued in Seismic Design Categories D_0, D_1 and D_2.*

Exceptions:

1. *Interior finish material is not required opposite wall panels that are braced in accordance with Method GB, BV-WSP, ABW, PFH, PFG and CS-PF, unless otherwise required by Section 302.6.*

2. *An approved interior finish material with an in-plane shear resistance equivalent to gypsum board shall be permitted to be substituted, unless otherwise required by Section 302.6.*

3. *Except for Method LIB, gypsum wall board is permitted to be omitted provided the required length of bracing in Tables 602.10.3(1) and 602.10.3(3) is multiplied by the appropriate adjustment factor in Tables 602.10.3(2) and 602.10.3(4) respectively, unless otherwise required by Section 302.6.*

602.10.5 Minimum length of a braced wall panel. *The minimum length of a braced wall panel shall comply with Table 602.10.5. For Methods CS-WSP and CS-SFB, the minimum panel length shall be based on the adjacent clear opening height in accordance with Table 602.10.5 and Figure 602.10.5. When a panel has an opening on either side of differing heights, the taller opening height shall be used to determine the panel length.*

TABLE 602.10.5
MINIMUM LENGTH OF BRACED WALL PANELS

METHOD (See Table 602.10.4)		MINIMUM LENGTH[a] (in) Wall Height					CONTRIBUTING LENGTH (in)
		8 ft	9 ft	10 ft	11 ft	12 ft	
DWB, WSP, SFB, PBS, PCP, HPS, BV-WSP		48	48	48	53	58	Actual [b]
GB		48	48	48	53	58	Double sided = Actual Single sided = 0.5 × Actual
LIB		55	62	69	NP	NP	Actual [b]
ABW	SDC A, B and C, wind speed < 110 mph	28	32	34	38	42	48
	SDC D_0, D_1 and D_2, wind speed < 110 mph	32	32	34	NP	NP	
PFH	Supporting roof only	16	16	16	18[c]	20 [c]	48
	Supporting one story and roof	24	24	24	27 [c]	29 [c]	48
PFG		24	27	30	33 [d]	36 [d]	1.5 × Actual [b]
CS-G		24	27	30	33	36	Actual [b]
CS-PF		16	18	20	22 [e]	24 [e]	Actual [b]
CS-WSP, CS-SFB	Adjacent clear opening height (in)						
	≤ 64	24	27	30	33	36	Actual [b]
	68	26	27	30	33	36	
	72	27	27	30	33	36	
	76	30	29	30	33	36	
	80	32	30	30	33	36	
	84	35	32	32	33	36	
	88	38	35	33	33	36	
	92	43	37	35	35	36	
	96	48	41	38	36	36	
	100		44	40	38	38	
	104		49	43	40	39	
	108		54	46	43	41	
	112			50	45	43	
	116			55	48	45	
	120			60	52	48	
	124				56	51	
	128				61	54	
	132				66	58	
	136					62	
	140					66	
	144					72	

For SI: 1 inch = 25.4 mm NP = Not permitted

a. Linear interpolation shall be permitted.
b. Use the actual length when it is greater than or equal to the minimum length.
c. Maximum header height for PFH is 10 feet per Figure 602.10.6.2, but wall height may be increased to 12 feet with pony wall.
d. Maximum opening height for PFG is 10 feet per Figure 602.10.6.3, but wall height may be increased to 12 feet with pony wall.
e. Maximum opening height for CS-PF is 10 feet per Figure 602.10.6.4, but wall height may be increased to 12 feet with pony wall

602.10.5.1 Contributing length. *For purposes of computing the required length of bracing in Tables 602.10.3(1) and 602.10.3(3), the contributing length of each braced wall panel shall be as specified in Table 602.10.5.*

602.10.5.2 Partial credit. *For Methods DWB, WSP, SFB, PBS, PCP and HPS in Seismic Design Categories A, B and C, panels between 36 inches and 48 inches in length shall be considered a braced wall panel and shall be permitted to partially contribute towards the required length of bracing in Tables 602.10.3(1) and 602.10.3(3), and the contributing length shall be determined from Table 602.10.5.2.*

602.10.6 Construction of Methods ABW, PFH, PFG, CS-PF and BV-WSP . *Methods ABW, PFH, PFG, CSPF and BV-WSP shall be constructed as specified in Sections 602.10.6.1 through 602.10.6.5.*

602.10.6.1 Method ABW: Alternate braced wall panels*. Method ABW braced wall panels shall be constructed in accordance with Figure 602.10.6.1. The hold-down force shall be in accordance with Table 602.10.6.1.*

602.10.6.2 Method PFH*: Portal frame with hold-downs. Method PFH braced wall panels shall be constructed in accordance with Figure 602.10.6.2.*

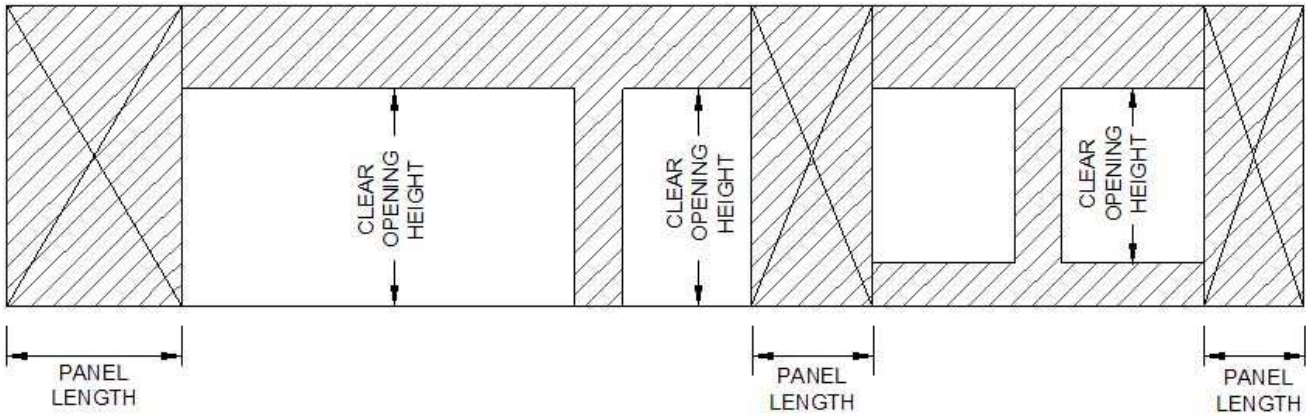

FIGURE 602.10.5
BRACED WALL PANELS WITH CONTINUOUS SHEATHING

TABLE 602.10.5.2
PARTIAL CREDIT FOR BRACED WALL PANELS LESS THAN 48 INCHES IN ACTUAL LENGTH

ACTUAL LENGTH OF BRACED WALL PANEL (in)	CONTRIBUTING LENGTH OF BRACED WALL PANEL (in) [a]	
	8 ft Wall Height	9 ft Wall Height
48	48	48
42	36	36
36	27	N/A

For SI: 1 inch = 25.4mm
a Linear interpolation shall be permitted.

TABLE 602.10.6.1
MINIMUM HOLD-DOWN FORCES FOR METHOD ABW BRACED WALL PANELS

SEISMIC DESIGN CATEGORY AND WIND SPEED	SUPPORTING/STORY	HOLD DOWN FORCE (lb)				
		Height of Braced Wall Panel				
		8 ft	9 ft	10 ft	11 ft	12 ft
SDC A, B and C	One story	1800	1800	1800	2000	2200
Wind speed < 110 mph	First of two story	3000	3000	3000	3300	3600
SDC D_0, D_1 and D_2	One story	1800	1800	1800	NP [a]	NP [a]
Wind speed < 110 mph	First of two story	3000	3000	3000	NP [a]	NP [a]

For SI: 1 inch =25.4 mm, 1 foot = 305 mm, 1lb =4.45N
a. NP = Not Permitted.

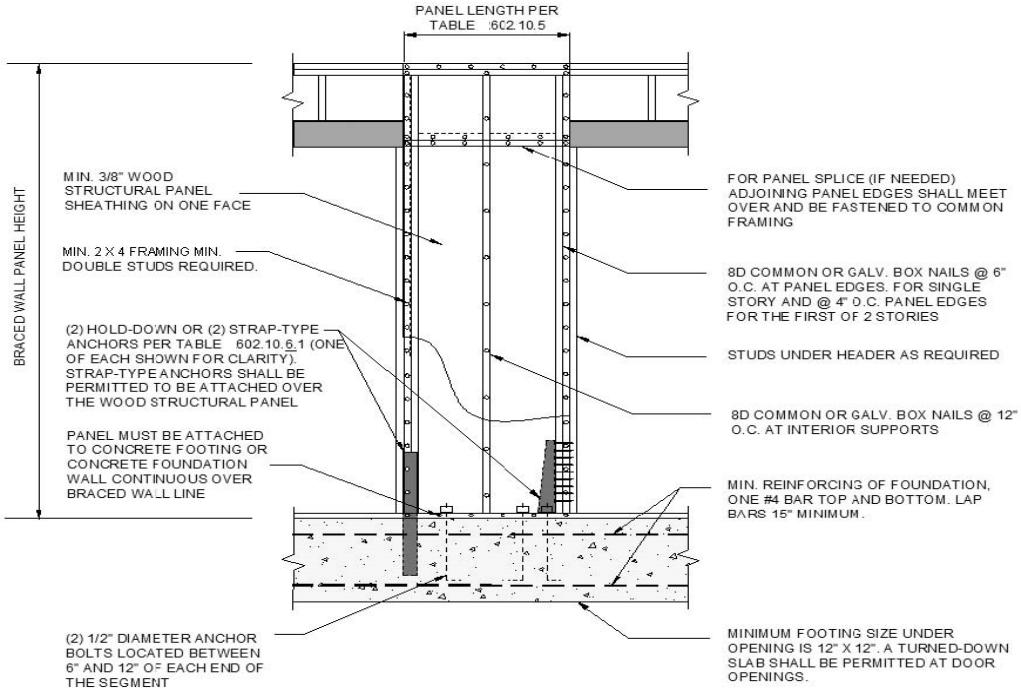

FIGURE 602.10.6.1
METHOD ABW: ALTERNATE BRACED WALL PANEL

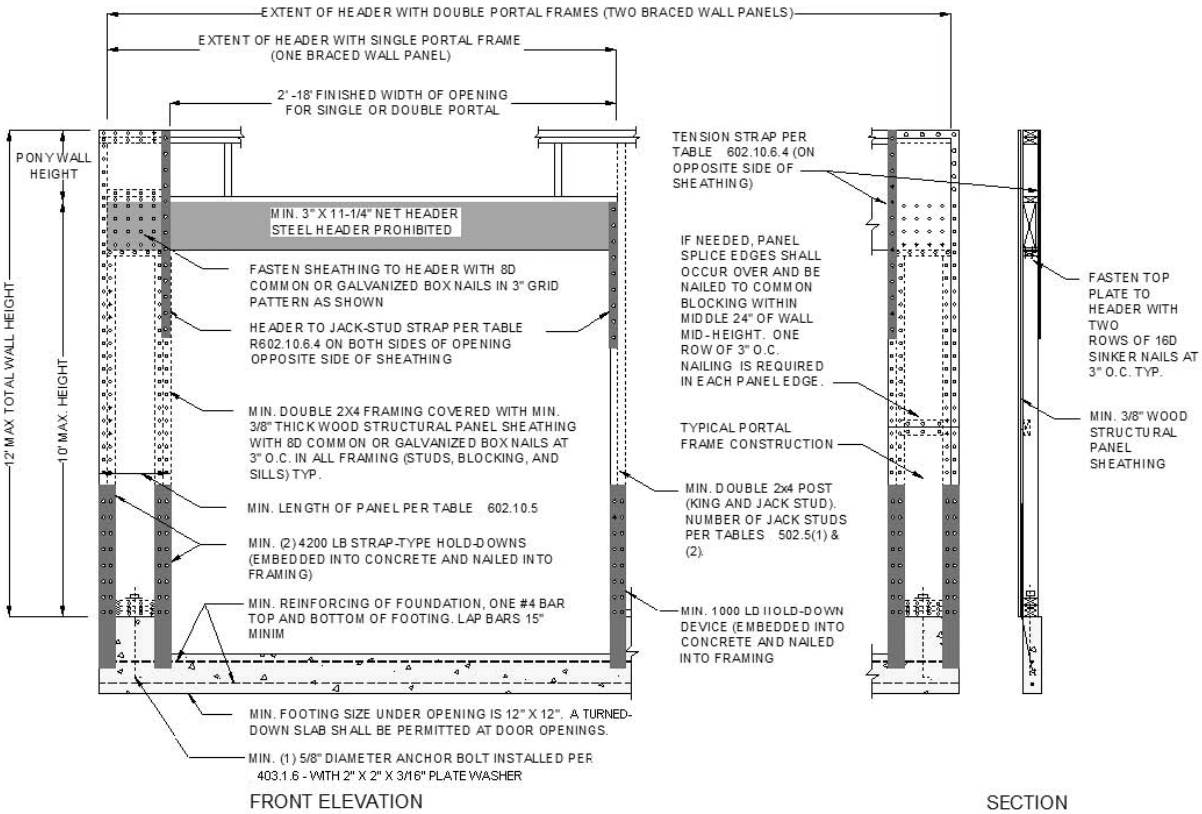

FIGURE 602.10.6.2
METHOD PFH: PORTAL FRAME WITH HOLD-DOWNS

602.10.6.3 Method PFG*: Portal frame at garage door openings in Seismic Design Categories A, B and C. Where supporting a roof or one story and a roof, a Method PFG braced wall panel constructed in accordance with Figure 602.10.6.3 shall be permitted on either side of garage door openings.*

602.10.6.4 Method CS-PF*: Continuously sheathed portal frame. Continuously sheathed portal frame braced wall panels shall be constructed in accordance with Figure 602.10.6.4 and Table 602.10.6.4. The number of continuously sheathed portal frame panels in a single braced wall line shall not exceed four.*

602.10.6.5 Wall bracing for dwellings with stone and masonry veneer in Seismic Design Categories D_0, D_1 and D_2*. Where stone and masonry veneer is installed in accordance with Section 703.7, wall bracing on exterior braced wall lines and braced wall lines on the interior of the building, backing or perpendicular to and laterally supporting veneered walls shall comply with this section.*

Where dwellings in Seismic Design Categories D_0, D_1 and D_2 have stone or masonry veneer installed in accordance with Section 703.7, and the veneer does not exceed the first story height, wall bracing shall be in accordance with Section 602.10.1.2.

Where detached one- or, two-, or three-family dwellings in Seismic Design Categories D_0, D_1 and D_2 have stone or masonry veneer installed in accordance with Section 703.7, and the veneer exceeds the first story height, wall bracing at exterior braced wall lines and braced wall lines on the interior of the building shall be constructed using Method BV-WSP in accordance with this section and Figure 602.10.6.5. Cripple walls shall not be permitted, and required interior braced wall lines shall be supported on continuous foundations.

Townhouses in Seismic Design Categories D_0, D_1 and D_2 with stone or masonry veneer exceeding the first story height shall be designed in accordance with accepted engineering practice.

***602.10.6.5.1 Length of bracing**. The length of bracing along each braced wall line shall be the greater of that required by the design wind speed and braced wall line spacing in accordance with Table 602.10.3(1) as adjusted by the factors in the footnotes or the Seismic Design Category and braced wall line length in accordance with Table 602.10.6.5. Angled walls shall be permitted to be counted in accordance with Section 602.10.1.4, and braced wall panel location shall be in accordance with Section 602.10.2.2. The seismic adjustment factors in Table 602.10.3(4) shall not be applied to the length of bracing determined using Table 602.10.6.5. In no case shall the minimum total length of bracing in a braced wall line, after all adjustments have been taken be less than 48 inches total.*

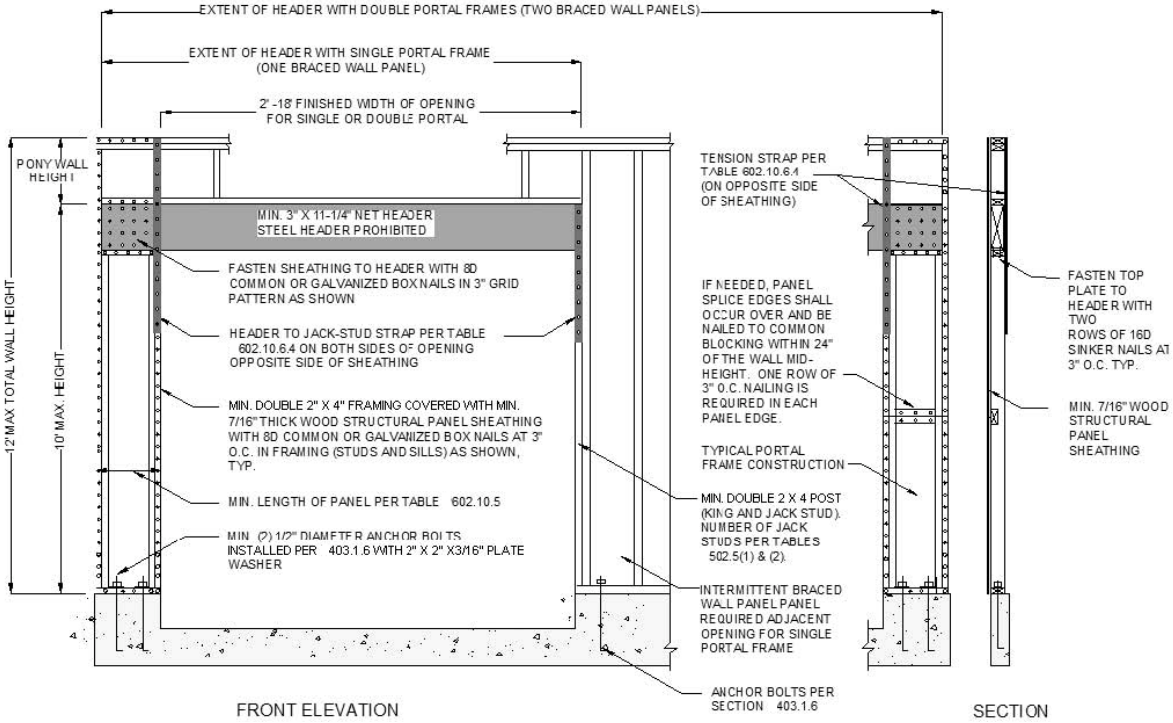

FIGURE 602.10.6.3
METHOD PFG: PORTAL FRAME AT GARAGE DOOR OPENINGS IN SEISMIC DESIGN CATEGORIES A, B, AND C

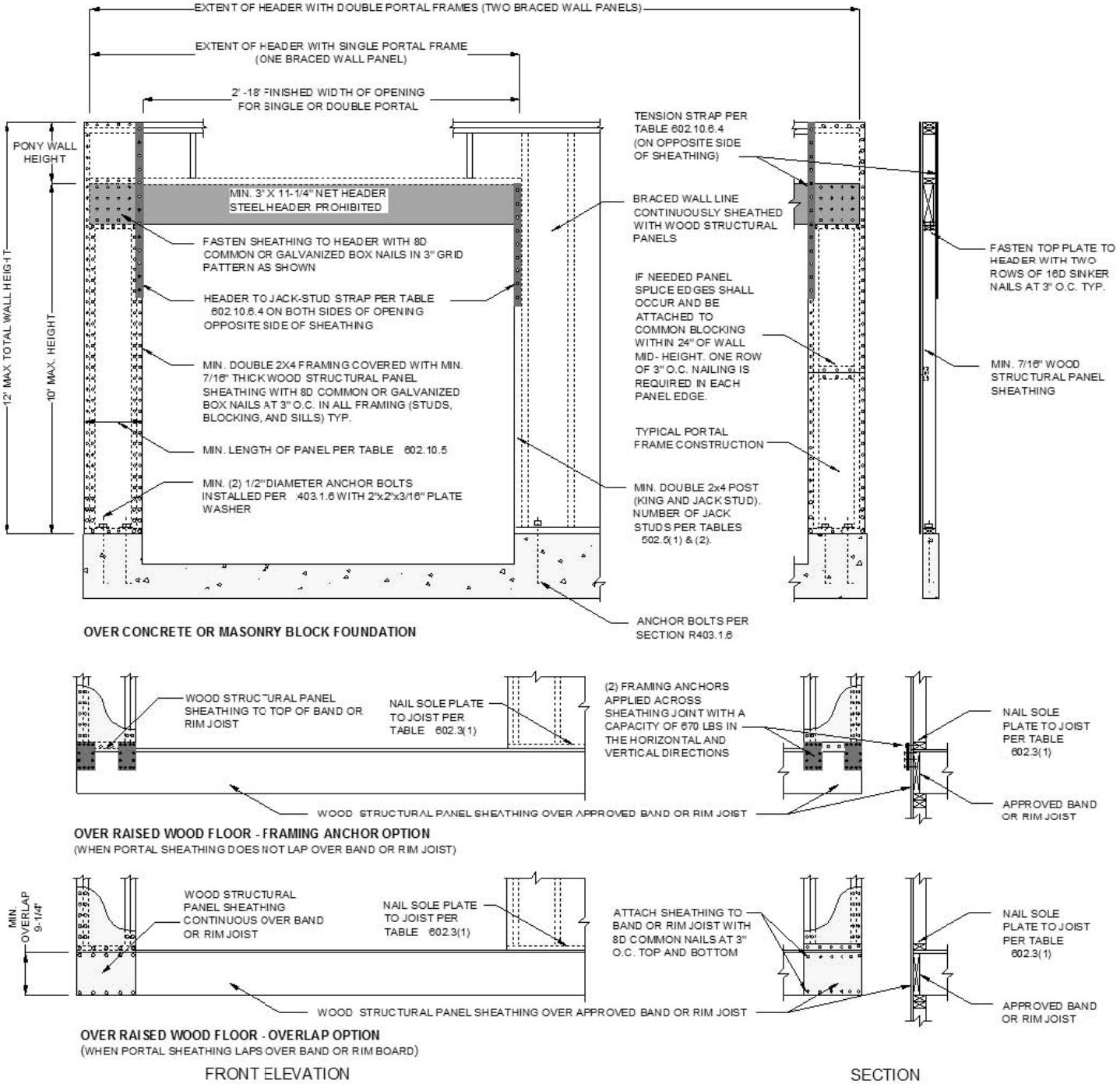

FIGURE 602.10.6.4
METHOD CS-PF: CONTINUOUSLY SHEATHED PORTAL FRAME PANEL CONSTRUCTION

TABLE 602.10.6.4
TENSION STRAP CAPACITY REQUIRED FOR RESISTING WIND PRESSURES PERPENDICULAR TO METHOD PFH, PFG AND CS-PF BRACED WALL PANELS

MINIMUM WALL STUD FRAMING NOMINAL SIZE AND GRADE	MAXIMUM PONY WALL HEIGHT (ft)	MAXIMUM TOTAL WALL HEIGHT (ft)	MAXIMUM OPENING WIDTH (ft)	TENSION STRAP CAPACITY REQUIRED (lb)[a, b]					
				Basic Wind Speed (mph)					
				85	90	100	85	90	100
				Exposure B			Exposure C		
2 x 4 No. 2 Grade	0	10	18	1000	1000	1000	1000	1000	1000
	1	10	9	1000	1000	1000	1000	1000	1275
			16	1000	1000	1750	1800	2325	3500
			18	1000	1200	2100	2175	2725	DR
	2	10	9	1000	1000	1025	1075	1550	2500
			16	1525	2025	3125	3200	3900	DR
			18	1875	2400	3575	3700	DR	DR
	2	12	9	1000	1200	2075	2125	2750	4000
			16	2600	3200	DR	DR	DR	DR
			18	3175	3850	DR	DR	DR	DR
	4	12	9	1775	2350	3500	3550	DR	DR
			16	4175	DR	DR	DR	DR	DR
2 x 6 Stud Grade	2	12	9	1000	1000	1325	1375	1750	2550
			16	1650	2050	2925	3000	3550	DR
			18	2025	2450	3425	3500	4100	DR
	4	12	9	1125	1500	2225	2275	2775	3800
			16	2650	3150	DR	DR	DR	DR
			18	3125	3675	DR	DR	DR	DR

For SI: 1 inch= 25.4 mm, 1 foot = 305 mm, 1 lb = 4.45 N
a. DR = design required
b. Strap shall be installed in accordance with manufacturer's recommendations.

TABLE 602.10.6.5
METHOD BV-WSP WALL BRACING REQUIREMENTS

SEISMIC DESIGN CATEGORY	STORY	BRACED WALL LINE LENGTH (FT)					SINGLE STORY HOLD-DOWN FORCE (lb)[a]	CUMULATIVE HOLD DOWN FORCE (lb)[b]
		10	20	30	40	50		
		MINIMUM TOTAL LENGTH (FT) OF BRACED WALL PANELS REQUIRED ALONG EACH BRACED WALL LINE						
D_0		4.0	7.0	10.5	14.0	17.5	N/A	—
		4.0	7.0	10.5	14.0	17.5	1900	—
	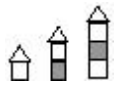	4.5	9.0	13.5	18.0	22.5	3500	5400
	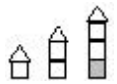	6.0	12.0	18.0	24.0	30.0	3500	8900
D_1		4.5	9.0	13.5	18.0	22.5	2100	—
		4.5	9.0	13.5	18.0	22.5	3700	5800
	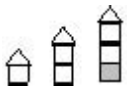	6.0	12.0	18.0	24.0	30.0	3700	9500
D_2		5.5	11.0	16.5	22.0	27.5	2300	—
	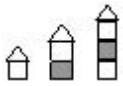	5.5	11.0	16.5	22.0	27.5	3900	6200
		NP	NP	NP	NP	NP	N/A	N/A

For SI: 1 inch = 25.4 mm, 1 foot = 304.8 mm, 1 pound per square foot = 0.479 kPa, 1 pound-force = 4.448 N.

a. Hold down force is minimum allowable stress design load for connector providing uplift tie from wall framing at end of braced wall panel at the noted story to wall framing at end of braced wall panel at the story below, or to foundation or foundation wall. Use single story hold down force where edges of braced wall panels do not align; a continuous load path to the foundation shall be maintained.

b. Where hold down connectors from stories above align with stories below, use cumulative hold down force to size middle and bottom story hold down connectors.

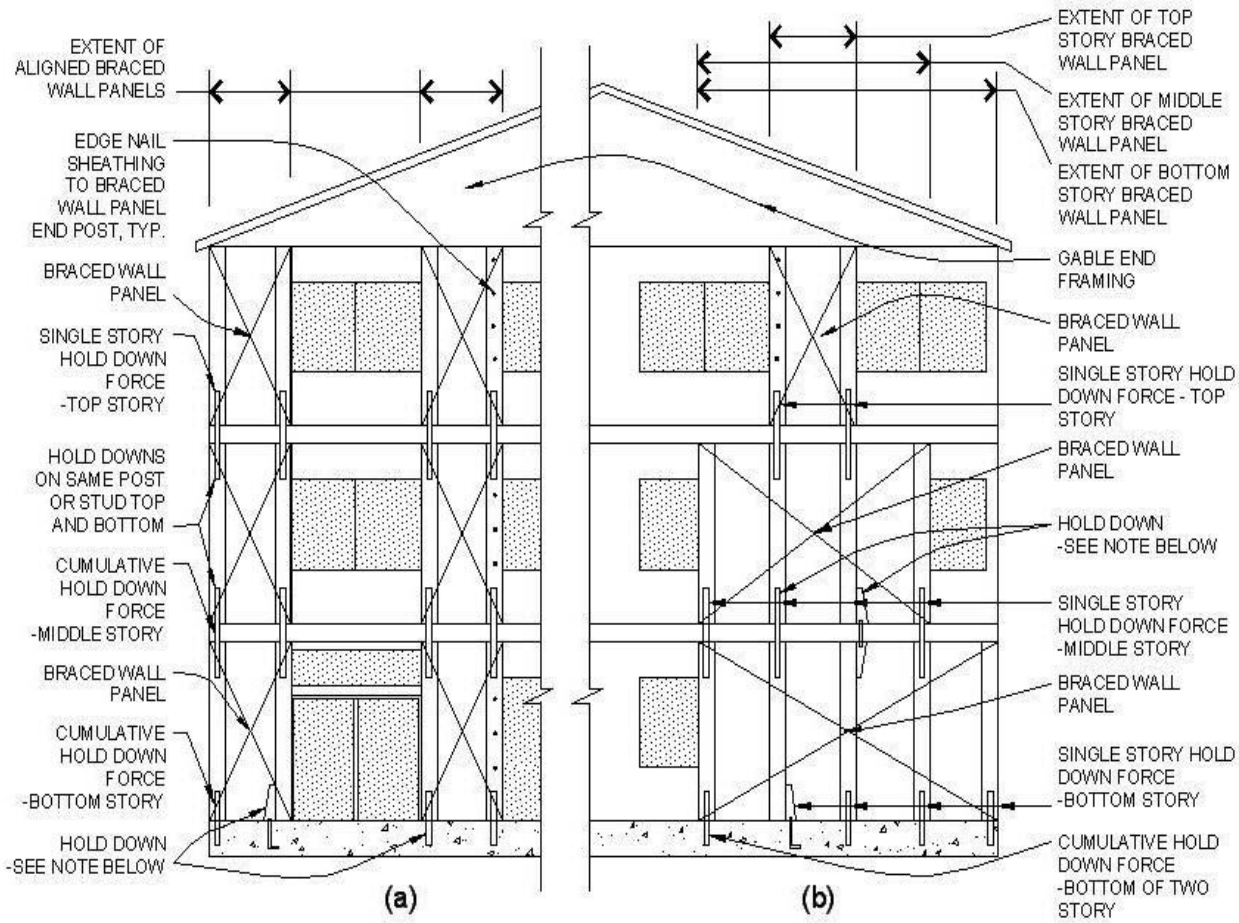

(a) Braced wall panels stacked (aligned story to story) Use cumulative hold down force.

(b) Braced wall panels mixed stacked and not stacked. Use hold down force as noted

Note: Hold downs should be strap ties, tension ties, or other approved hold down devices and shall be installed in accordance with the manufacturer's instructions.

FIGURE 602.10.6.5
METHOD BV-WSP: WALL BRACING FOR DWELLINGS WITH STONE AND MASONRY VENEER IN SEISMIC CATEGORIES D_0, D_1, AND D_2

602.10.7 Ends of braced wall lines with continuous sheathing. *Each end of a braced wall line with continuous sheathing shall have one of the conditions shown in Figure 602.10.7.*

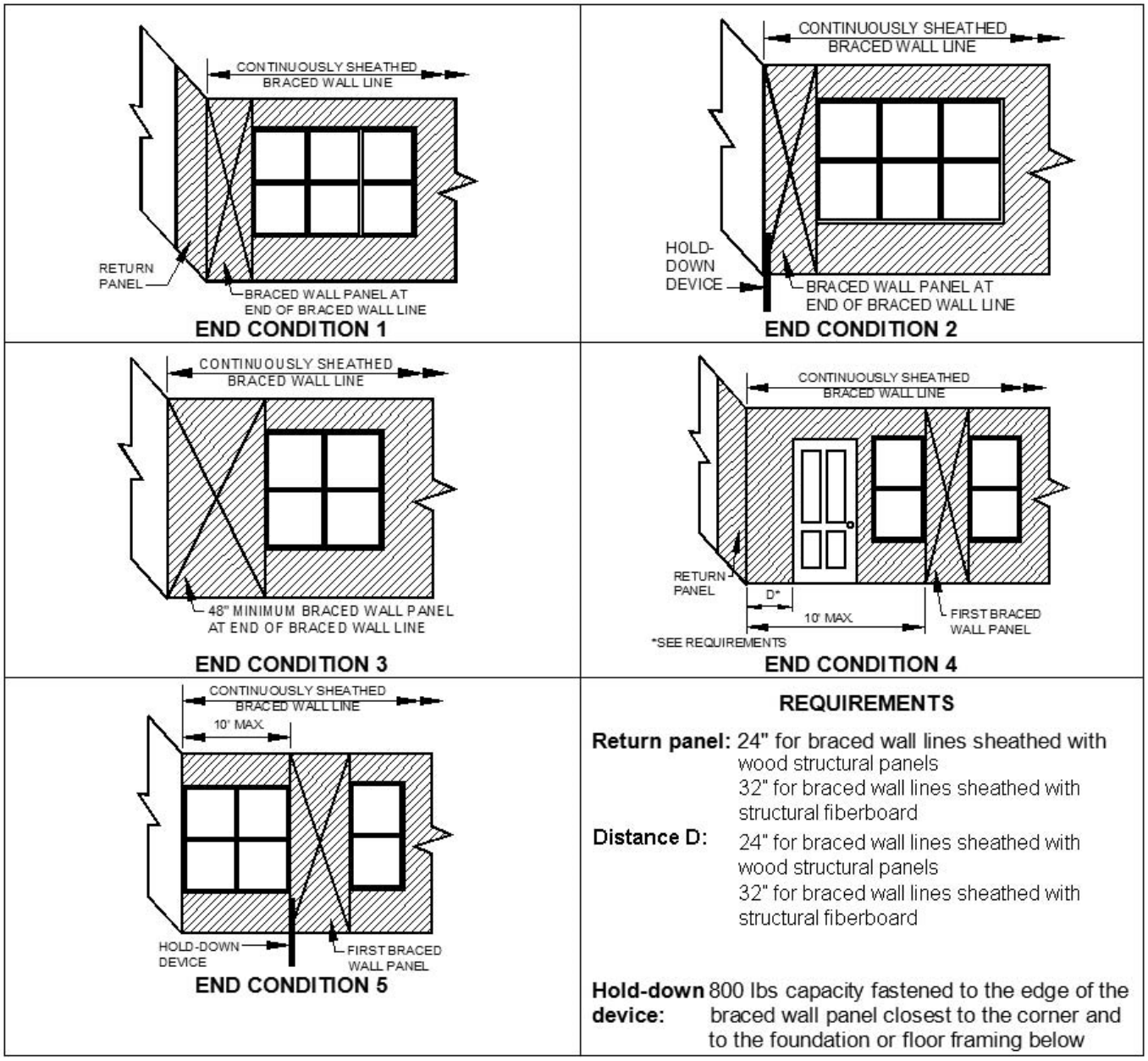

FIGURE 602.10.7
END CONDITIONS FOR BRACED WALL LINES WITH CONTINUOUS SHEATHING

602.10.8 Braced wall panel connections*. Braced wall panels shall be connected to floor framing or foundations as follows:*

1. *Where joists are perpendicular to a braced wall panel above or below, a rim joist, band joist or blocking shall be provided along the entire length of the braced wall panel in accordance with Figure 602.10.8(1). Fastening of top and bottom wall plates to framing, rim joist, band joist and/or blocking shall be in accordance with Table 602.3(1).*

2. *Where joists are parallel to a braced wall panel above or below, a rim joist, end joist or other parallel framing member shall be provided directly above and below the braced wall panel in accordance with Figure 602.10.8(2). Where a parallel framing member cannot be located directly above and below the panel, full-depth blocking at 16 inch (406 mm) spacing shall be provided between the parallel framing members to each side of the braced wall panel in accordance with Figure 602.10.8(2). Fastening of blocking and wall plates shall be in accordance with Table 602.3(1) and Figure 602.10.8(2).*

3. *Connections of braced wall panels to concrete or masonry shall be in accordance with Section 403.1.6.*

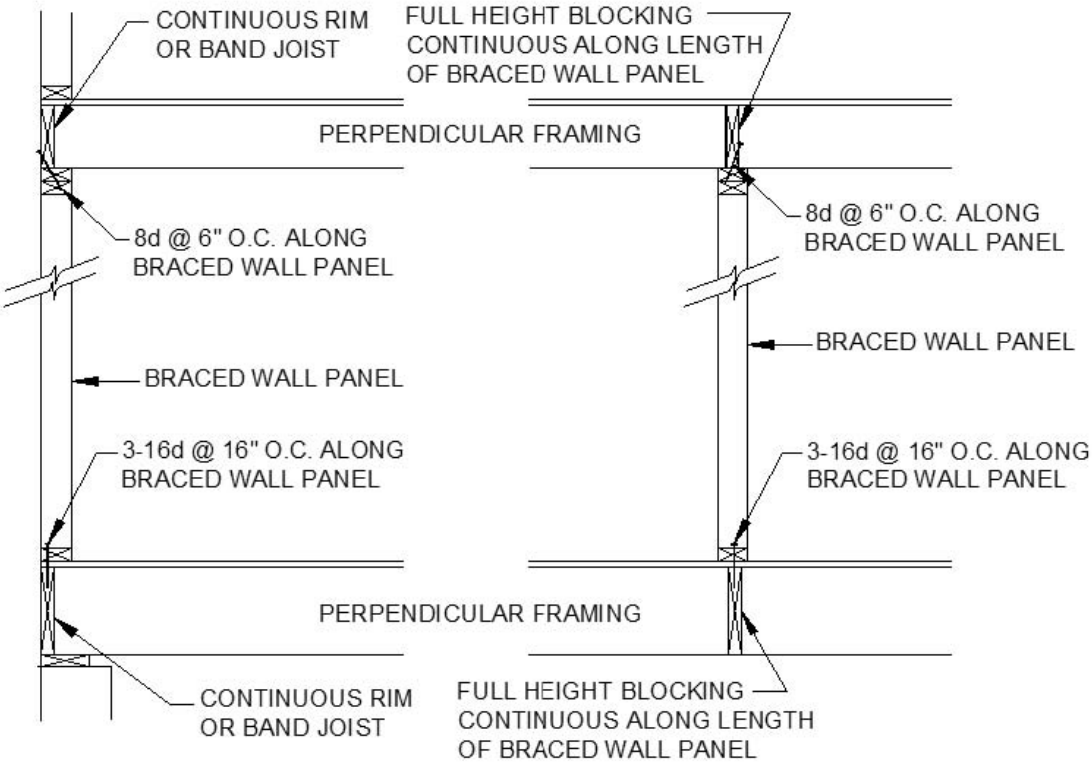

FIGURE 602.10.8(1)
BRACED WALL PANEL CONNECTION WHEN PERPENDICULAR TO FLOOR/CEILING FRAMING

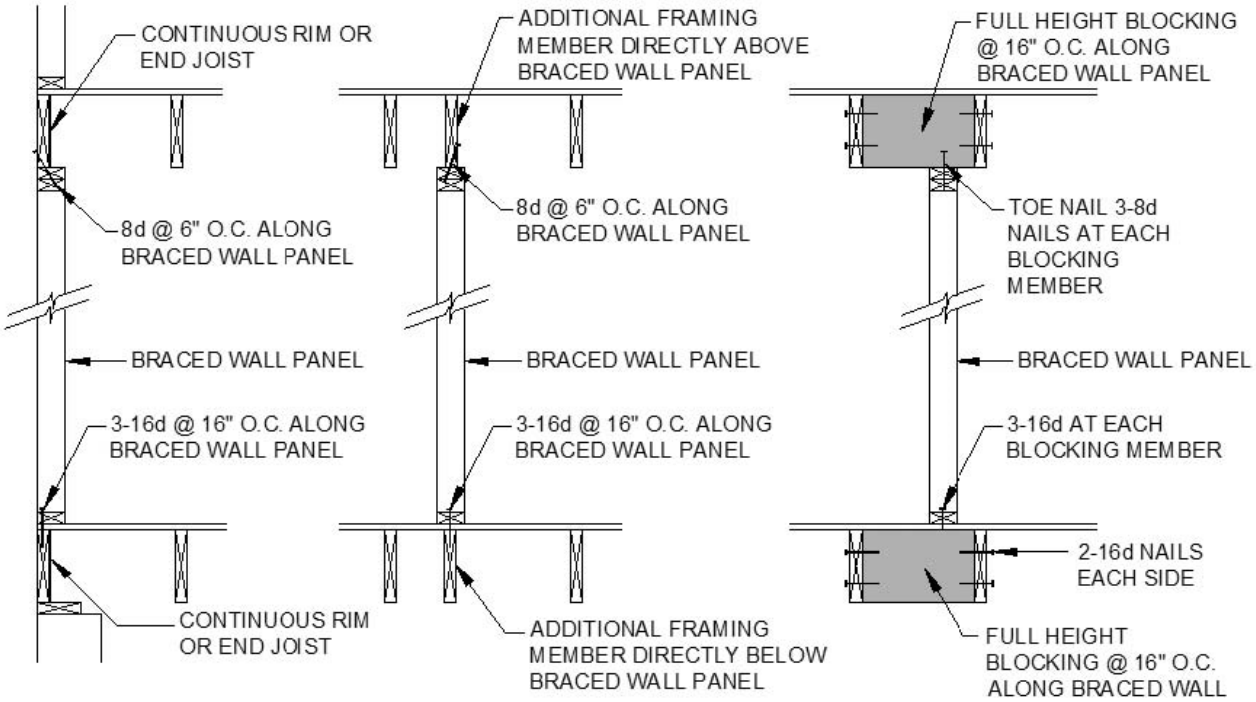

FIGURE 602.10.8(2)
BRACED WALL PANEL CONNECTION WHEN PARALLEL TO FLOOR/CEILING FRAMING

602.10.8.1 Braced wall panel connections for Seismic Design Categories D_0, D_1 and D_2. *Braced wall panels shall be fastened to required foundations in accordance with Section 602.11.1, and top plate lap splices shall be face-nailed with at least eight 16d nails on each side of the splice.*

602.10.8.2 Connections to roof framing*. Top plates of exterior braced wall panels shall be attached to rafters or roof trusses above in accordance with Table 602.3(1) and this section. Where required by this section, blocking between rafters or roof trusses shall be attached to top plates of braced wall panels and to rafters and roof trusses in accordance with Table 602.3(1). A continuous band, rim, or header joist or roof truss parallel to the braced wall panels shall be permitted to replace the blocking required by this section. Blocking shall not be required over openings in continuously-sheathed braced wall lines. In addition to the requirements of this section, lateral support shall be provided for rafters and ceiling joists in accordance with Section 802.8 and for trusses in accordance with Section 802.10.3. Roof ventilation shall be provided in accordance with Section 806.1.*

1. *For SDC A, B and C and wind speeds less than 100 mph (45 m/s) where the distance from the top of the braced wall panel to the top of the rafters or roof trusses above is 9 ¼ inches (235 mm) or less, blocking between rafters or roof trusses shall not be required. Where the distance from the top of the braced wall panel to the top of the rafters or roof trusses above is between 9 ¼ inches (235 mm) and 15 ¼ inches (387 mm) blocking between rafters or roof trusses shall be provided above the braced wall panel in accordance with Figure 602.10.8.2(1).*

2. *For SDC D_0, D_1 and D_2 or wind speeds of 100 mph (45 m/s) or greater, where the distance from the top of the braced wall panel to the top of the rafters or roof trusses is 15 ¼ inches (387 mm) or less, blocking between rafters or roof trusses shall be provided above the braced wall panel in accordance with Figure 602.10.8.2(1).*

3. *Where the distance from the top of the braced wall panel to the top of rafters or roof trusses exceeds 15 ¼ inches (387 mm), the top plates of the braced wall panel shall be connected to perpendicular rafters or roof trusses above in accordance with one or more of the following methods:*

   3.1. Soffit blocking panels constructed in accordance with Figure 602.10.8.2(2),

   3.2. Vertical blocking panels constructed in accordance with Figure 602.10.8.2(3),

   3.3. Full-height engineered blocking panels designed in accordance with the AF&PA WFCM,

   3.4. Blocking, blocking panels, or other methods of lateral load transfer designed in accordance with accepted engineering practice.

***602.10.9 Braced wall panel support**. Braced wall panel support shall be provided as follows:*

1. *Cantilevered floor joists complying with Section 502.3.3 shall be permitted to support braced wall panels.*

2. *Elevated post or pier foundations supporting braced wall panels shall be designed in accordance with accepted engineering practice.*

3. *Masonry stem walls with a length of 48 inches (1219 mm) or less supporting braced wall panels shall be reinforced in accordance with Figure 602.10.9. Masonry stem walls with a length greater than 48 inches (1219 mm) supporting braced wall panels shall be constructed in accordance with Section 403.1 Methods ABW and PFH shall not be permitted to attach to masonry stem walls.*

4. *Concrete stem walls with a length of 48 inches (1219 mm) or less, greater than 12 inches (305 mm) tall and less than 6 inches (152 mm) thick shall have reinforcement sized and located in accordance with Figure 602.10.9.*

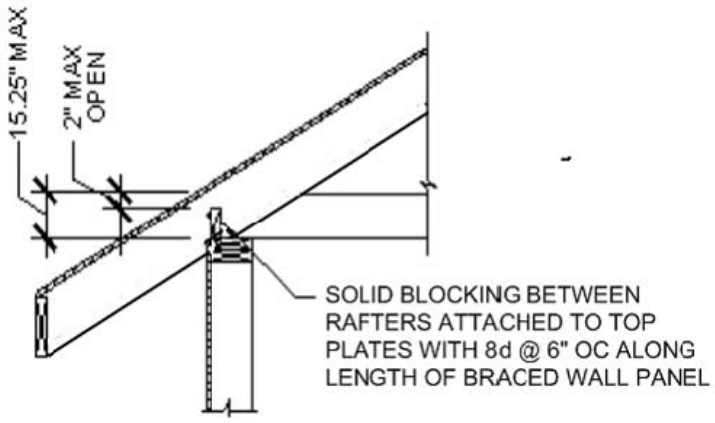

For SI: 1 inch = 25.4 mm

FIGURE 602.10.8.2(1)
BRACED WALL PANEL CONNECTION TO PERPENDICULAR RAFTERS

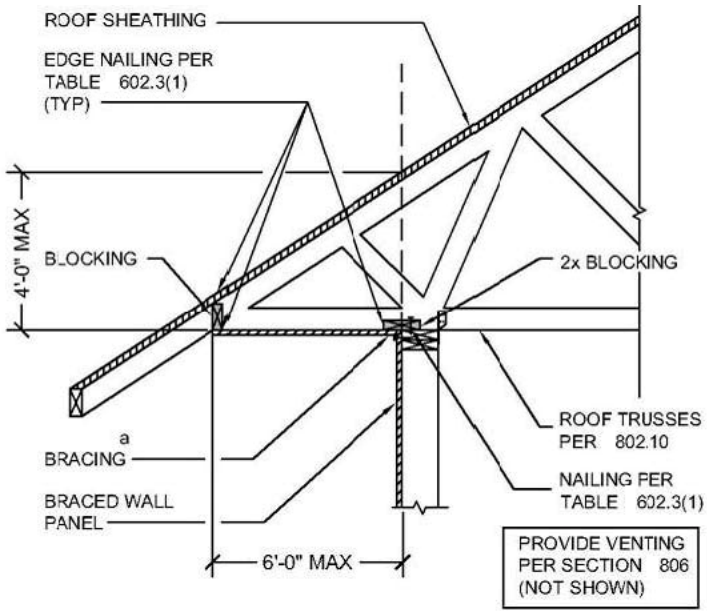

For SI: 1 inch = 25.4 mm
a. Methods of bracing shall be as described in Section 602.10.4

FIGURE 602.10.8.2(2)
BRACED WALL PANEL CONNECTION OPTION TO PERPENDICULAR RAFTERS OR ROOF TRUSSES

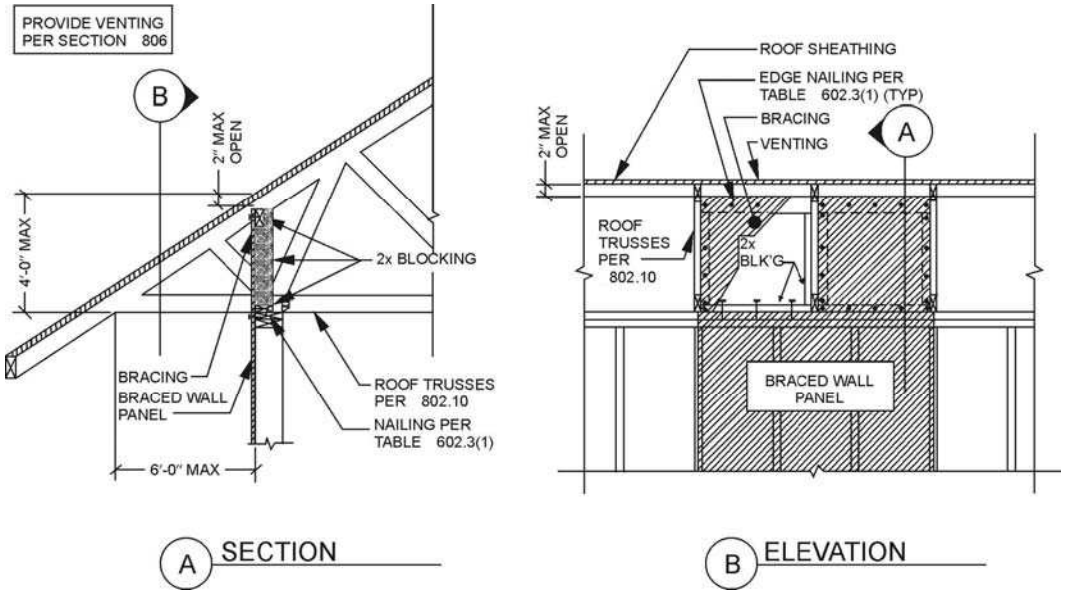

For SI: 1 inch = 25.4 mm
a. Methods of bracing shall be as described in Section 602.10.4

FIGURE 602.10.8.2(3)
BRACED WALL PANEL CONNECTION OPTION TO PERPENDICULAR RAFTERS OR ROOF TRUSSES

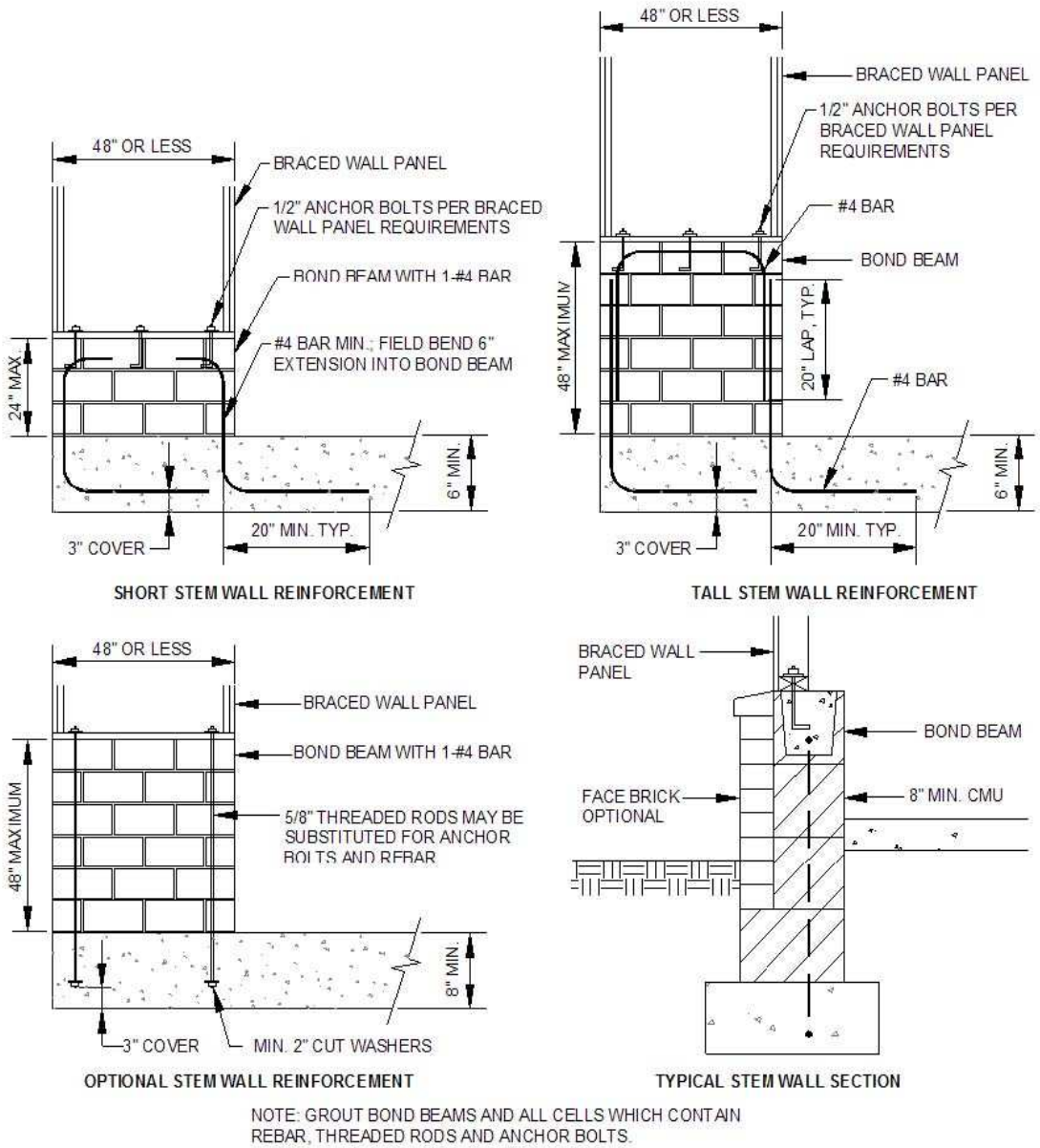

FIGURE 602.10.9
MASONRY STEM WALLS SUPPORTING BRACED WALL PANELS

602.10.9.1 Braced wall panel support for Seismic Design Category D_2. *In one-story buildings located in Seismic Design Category D_2, braced wall*

panels shall be supported on continuous foundations at intervals not exceeding 50 feet (15 240 mm). In two story buildings located in Seismic Design Category D_2, all braced wall panels shall be supported on continuous foundations.

Exception: *Two-story buildings shall be permitted to have interior braced wall panels supported on continuous foundations at intervals not exceeding 50 feet (15 240 mm) provided that:*

1. *The height of cripple walls does not exceed 4 feet (1219 mm).*

2. *First-floor braced wall panels are supported on doubled floor joists, continuous blocking or floor beams.*

3. *The distance between bracing lines does not exceed twice the building width measured parallel to the braced wall line.*

602.10.10 Panel joints. *All vertical joints of panel sheathing shall occur over, and be fastened to common studs. Horizontal joints in braced wall panels shall occur over, and be fastened to common blocking of a minimum 1 ½ inch (38 mm) thickness.*

Exceptions:

1. *Vertical joints of panel sheathing shall be permitted to occur over double studs, where adjoining panel edges are attached to separate studs with the required panel edge fastening schedule, and the adjacent studs are attached together with 2 rows of 10d box nails (3-inches by 0.128-inch) at 10 inch o.c.*

2. *Blocking at horizontal joints shall not be required in wall segments that are not counted as braced wall panels.*

3. *Where the bracing length provided is at least twice the minimum length required by Tables 602.10.3(1) and 602.10.3(2) blocking at horizontal joints shall not be required in braced wall panels constructed using Methods WSP, SFB, GB, PBS or HPS.*

4. *When Method GB panels are installed horizontally, blocking of horizontal joints is not required.*

602.10.11 Cripple wall bracing. *Cripple walls shall be constructed in accordance with Section 602.9 and braced in accordance with this section. Cripple walls shall be braced with the length and method of bracing used for the wall above in accordance with Tables 602.10.1.3(1) and 602.10.1.3(3), except that the length of cripple wall bracing shall be multiplied by a factor of 1.15. The distance between adjacent edges of braced wall panels shall be reduced from 20 feet (6096 mm) to 14 feet (4267 mm).*

602.10.11.1 Cripple wall bracing for Seismic Design Categories D_0, D_1 and townhouses in Seismic Design Category C. *In addition to the requirements in Section 602.10.11, the distance between adjacent edges of braced wall panels for cripple walls along a braced wall line shall be 14 feet (4267 mm) maximum.*

Where braced wall lines at interior walls are not supported on a continuous foundation below, the adjacent parallel cripple walls, where provided, shall be braced with Method WSP per Section R602.10.2 or Method CS-WSP per Section 602.10.4. The length of bracing required per Table 602.10.1.3(3) for the cripple walls shall be multiplied by 1.5. Where the cripple walls do not have sufficient length to provide the required bracing, the spacing of panel edge fasteners shall be reduced to 4 inches (102 mm) on center and the required bracing length adjusted by 0.7. If the required length can still not be provided, the cripple wall shall be designed in accordance with accepted engineering practice.

602.10.11.2 Cripple wall bracing for Seismic Design Category D_2. *In Seismic Design Category D_2, cripple walls shall be braced in accordance with Tables 602.10.3(3) and 602.10.3(4).*

602.10.11.3 Redesignation of cripple walls*. Where all cripple wall segments along a braced wall line do not exceed 48 inches (1219 mm) in height, the cripple walls shall be permitted to be redesignated as a first story wall for purposes of determining wall bracing requirements. Where any cripple wall segment in a braced wall line exceeds 48 inches (1219 mm) in height, the entire cripple wall shall be counted as an additional story. If the cripple walls are redesignated, the stories above the redesignated story shall be counted as the second and third stories, respectively.*

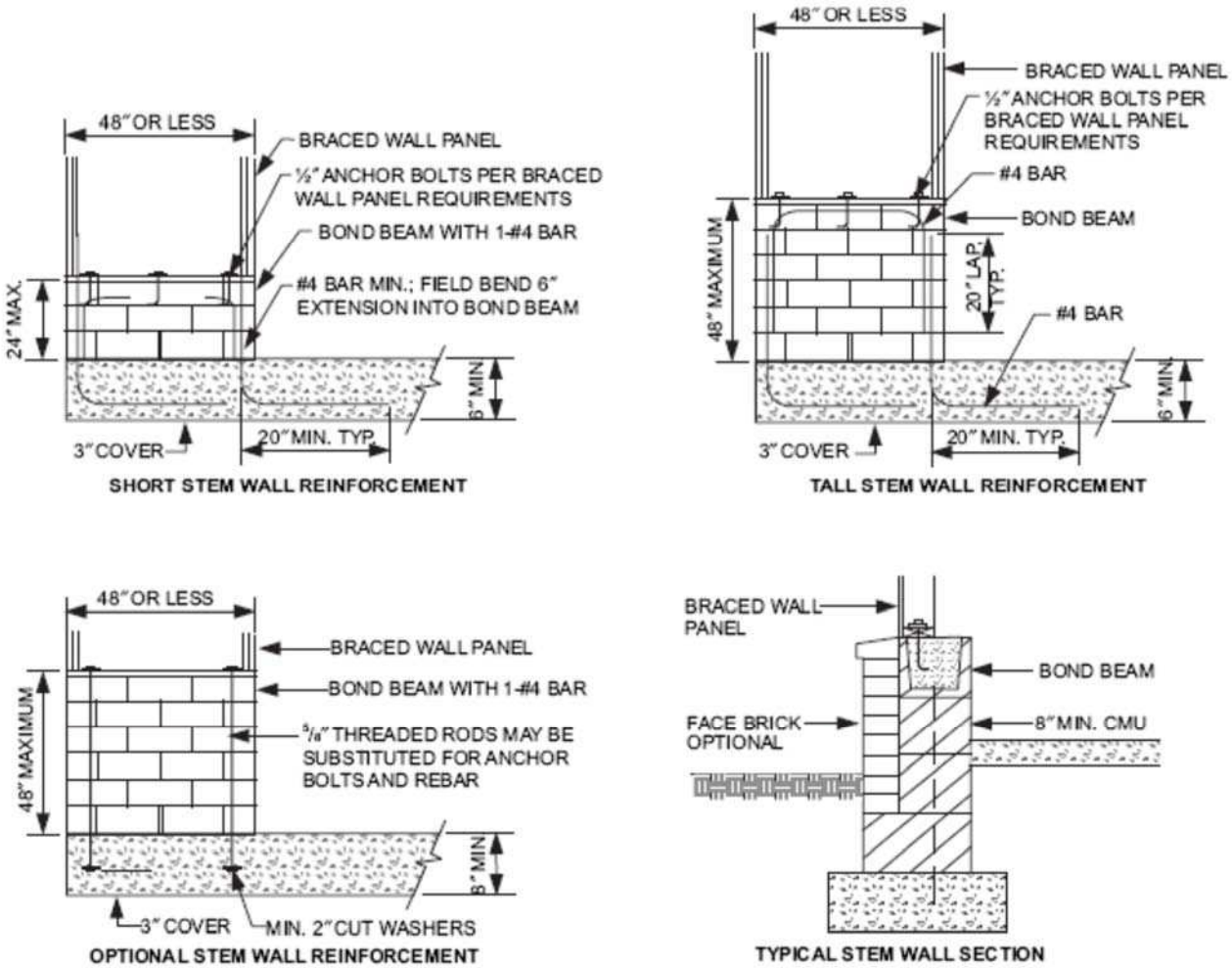

NOTE: Grout bond beams and all cells which contain rebar, threaded rods and anchor bolts.
For SI: 1 inch = 25.4 mm.

FIGURE 602.10.7
MASONRY STEM WALLS SUPPORTING BRACED WALL PANELS

602.11 Wall anchorage. Braced wall line sills shall be anchored to concrete or masonry foundations in accordance with Sections 403.1.6 and 602.11.1.

602.11.1 Wall anchorage for all buildings in Seismic Design Categories D_0, D_1 and D_2 and townhouses in Seismic Design Category C. Plate washers, a minimum of 0.229 inch by 3 inches by 3 inches (5.8 mm by 76 mm by 76 mm) in size, shall be provided between the foundation sill plate and the nut except where approved anchor straps are used. The hole in the plate washer is permitted to be diagonally slotted with a width of up to $^3/_{16}$ inch (5 mm) larger

than the bolt diameter and a slot length not to exceed 1¾ inches (44 mm), provided a standard cut washer is placed between the plate washer and the nut.

602.11.2 Stepped foundations in Seismic Design Categories D_0, D_1 and D_2. In all buildings located in Seismic Design Categories D_0, D_1 or D_2, where the height of a required braced wall line that extends from foundation to floor above varies more than 4 feet (1219 mm), the braced wall line shall be constructed in accordance with the following:

1. Where the lowest floor framing rests directly on a sill bolted to a foundation not less than 8 feet (2440 mm) in length along a line of bracing, the line shall be considered as braced. The double plate of the cripple stud wall beyond the segment of footing that extends to the lowest framed floor shall be spliced by extending the upper top plate a minimum of 4 feet (1219 mm) along the foundation. Anchor bolts shall be located a maximum of 1 foot and 3 feet (305 and 914 mm) from the step in the foundation. See Figure 602.11.2.

2. Where cripple walls occur between the top of the foundation and the lowest floor framing, the bracing requirements of Sections 602.10.11, 602.10.11.1 and 602.10.11.2 shall apply.

3. Where only the bottom of the foundation is stepped and the lowest floor framing rests directly on a sill bolted to the foundations, the requirements of Sections 403.1.6 and 602.11.1 shall apply.

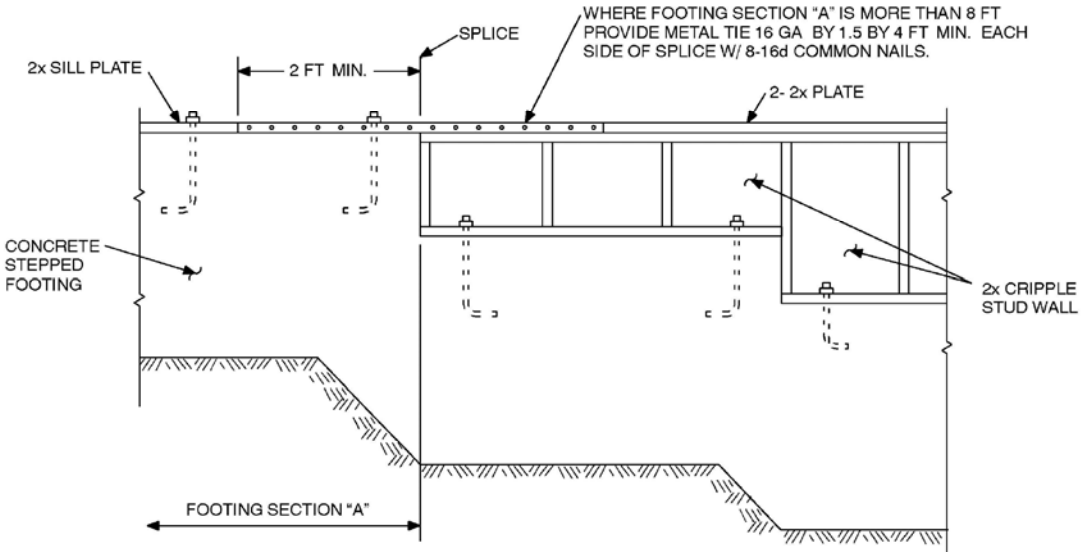

For SI: 1 inch = 25.4 mm, 1 foot = 304.8 mm.
Note: Where footing Section "A" is less than 8 feet long in a 25-foot-long wall, install bracing at cripple stud wall.

FIGURE 602.11.2
STEPPED FOUNDATION CONSTRUCTION

602.12 Simplified wall bracing. *Buildings meeting all of the conditions listed in items 1-8 shall be permitted to be braced in accordance with this section as an alternative to the requirements of Section 602.10. The entire building shall be braced in accordance with this section; the use of other bracing provisions of R602.10, except as specified herein, shall not be permitted.*

1. *There shall be no more than two stories above the top of a concrete or masonry foundation or basement wall. Permanent wood foundations shall not be permitted.*
2. *Floors shall not cantilever more than 24 inches (607 mm) beyond the foundation or bearing wall below.*
3. *Wall height shall not be greater than 10 feet (2743 mm).*
4. *The building shall have a roof eave-to-ridge height of 15 feet (4572 mm) or less.*
5. *All exterior walls shall have gypsum board with a minimum thickness of 1/2 inch (12.7 mm) installed on the interior side fastened in accordance with Table 702.3.5.*
6. *The structure shall be located where the basic wind speed is less than or equal to 90 mph (40 m/s), and the Exposure Category is A or B.*

7. *The structure shall be located in Seismic Design Category A, B or C for detached one- and two-family dwellings or Seismic Design Category A or B for townhouses.*
8. *Cripple walls shall not be permitted in two-story buildings.*

602.12.1 Circumscribed rectangle. *The bracing required for each building shall be determined by circumscribing a rectangle around the entire building on each floor as shown in Figure 602.12.1. The rectangle shall surround all enclosed offsets and projections such as sunrooms and attached garages. Open structures, such as carports and decks, shall be permitted to be excluded. The rectangle shall have no side greater than 60 feet (18 288 mm), and the ratio between the long side and short side shall be a maximum of 3:1.*

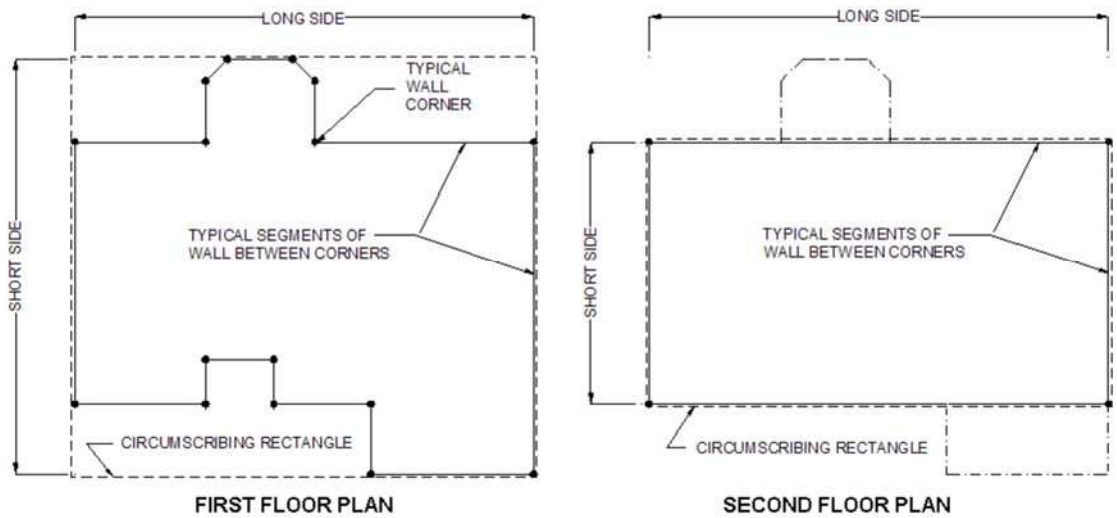

FIGURE R602.12.1
RECTANGLE CIRCUMSCRIBING AN ENCLOSED BUILDING

602.12.2 Sheathing materials. *The following sheathing materials installed on the exterior side of exterior walls shall be used to construct a bracing unit as defined in Section 602.12.3. Mixing materials is prohibited.*

1. *Wood structural panels with a minimum thickness of 3/8 inch (9.5 mm) fastened in accordance with Table 602.3(3).*
2. *Structural fiberboard sheathing with a minimum thickness of 1/2 inch (12.7 mm) fastened in accordance with Table 602.3(1).*

602.12.3 Bracing unit. *A bracing unit shall be a fullheight sheathed segment of the exterior wall with no openings or vertical or horizontal offsets and a minimum*

length as specified herein. Interior walls shall not contribute toward the amount of required bracing. Mixing of Items 1 and 2 is prohibited on the same story.

1. *Where all framed portions of all exterior walls are sheathed in accordance with Section 602.12.2, including wall areas between bracing units, above and below openings and on gable end walls, the minimum length of a bracing unit shall be 3 feet (914 mm).*
2. *Where the exterior walls are braced with sheathing panels in accordance with Section 602.12.2 and areas between bracing units are covered with other materials, the minimum length of a bracing unit shall be 4 feet (1219 mm).*

602.12.3.1 Multiple bracing units. *Segments of wall compliant with Section 602.12.3 and longer than the minimum bracing unit length shall be considered as multiple bracing units. The number of bracing units shall be determined by dividing the wall segment length by the minimum bracing unit length. Full-height sheathed segments of wall narrower than the minimum bracing unit length shall not contribute toward a bracing unit except as specified in Section 602.12.6.*

602.12.4 Number of bracing units. *Each side of the circumscribed rectangle, as shown in Figure 602.12.1, shall have, at a minimum, the number of bracing units in accordance with Table 602.12.4 placed on the parallel exterior walls facing the side of the rectangle. Bracing units shall then be placed using the distribution requirements specified in Section 602.12.5.*

602.12.5 Distribution of bracing units. *The placement of bracing units on exterior walls shall meet all of the following requirements as shown in Figure R602.12.5.*

1. *A bracing unit shall begin no more than 12 feet (3658 mm) from any wall corner.*
2. *The distance between adjacent edges of bracing units shall be no greater than 20 feet (6096 mm).*
3. *Segments of wall greater than 8 feet (2438 mm) in length shall have a minimum of one bracing unit.*

602.12.6 Narrow panels. *The bracing methods referenced in Section 602.10 and specified in Sections 602.12.6.1 through 602.12.6.3 shall be permitted when using simplified wall bracing.*

602.12.6.1 Method CS-G. *Braced wall panels constructed as Method CS-G in accordance with Tables 602.10.4 and 602.10.5 shall be permitted for one story garages when all framed portions of all exterior walls are sheathed with wood structural panels. Each CS-G panel shall be equivalent to 0.5 of a bracing unit. Segments of wall which include a Method CS-G panel shall meet the requirements of Section R602.10.4.2.*

602.12.6.2 Method CS-PF. *Braced wall panels constructed as Method CS-PF in accordance with Section 602.10.6.4 shall be permitted when all framed portions of all exterior walls are sheathed with wood structural panels. Each CS-PF panel shall equal 0.5 bracing units. A maximum of four CS-PF panels shall be permitted on all segments of walls parallel to each side of the circumscribed rectangle. Segments of wall which include a Method CS-PF panel shall meet the requirements of Section 602.10.4.2.*

TABLE 602.12.4
MINIMUM NUMBER OF BRACING UNITS ON EACH SIDE OF THE CIRCUMSCRIBED RECTANGLE

STORY LEVEL	EAVE-TO-RIDGE HEIGHT (feet)	MINIMUM NUMBER OF BRACING UNITS ON EACH LONG SIDE[a, b]						MINIMUM NUMBER OF BRACING UNITS ON EACH SHORT SIDE[a, b]					
		Length of short side (feet)[c]						Length of long side (feet)[c]					
		10	20	30	40	50	60	10	20	30	40	50	60
	10	1	2	2	2	3	3	1	2	2	2	3	3
		2	3	3	4	5	6	2	3	3	4	5	6
	15	1	2	3	3	4	4	1	2	3	3	4	4
		2	3	4	5	6	7	2	3	4	5	6	7

For SI: 1 inch = 25.4 mm, 1 foot = 304.8 mm.
a. Interpolation shall not be permitted.
b. Cripple walls or wood-framed basement walls in a walk-out condition of a one-story structure shall be designed as the first floor of a two-story house.
c. Actual lengths of the sides of the circumscribed rectangle shall be rounded to the next highest unit of 10 when using this table.

602.12.6.3 Methods PFH and PFG. *Braced wall panels constructed as Method PFH and PFG shall be permitted when bracing units are constructed using wood structural panels. Each PFH panel shall equal one bracing unit and each PFG panel shall be equal to 0.75 bracing units.*

602.12.7 Lateral support. *For bracing units located along the eaves, the vertical distance from the outside edge of the top wall plate to the roof sheathing above shall not exceed 9.25 inches (235 mm) at the location of a bracing unit unless lateral support is provided in accordance with Section 602.10.8.2.*

602.12.8 Stem walls. *Masonry stem walls with a height and length of 48 inches (1219 mm) or less supporting a bracing unit or a Method CS-G, CS-PF or PFG braced wall panel shall be constructed in accordance with Figure 602.10.9.*

Concrete stem walls with a length of 48 inches (1219 mm) or less, greater than 12 inches (305 mm) tall and less than 6 inches (152 mm) thick shall be reinforced sized and located in accordance with Figure 602.10.9.

SECTION 603
STEEL WALL FRAMING

603.1 General. Elements shall be straight and free of any defects that would significantly affect structural performance. Cold-formed steel wall framing members shall comply with the requirements of this section.

603.1.1 Applicability limits. The provisions of this section shall control the construction of exterior cold-formed steel wall framing and interior load-bearing cold-formed steel wall framing for buildings not more than 60 feet (18 288 mm) long perpendicular to the joist or truss span, not more than 40 feet (12 192 mm) wide parallel to the joist or truss span, and less than or equal to three stories above grade plane. All exterior walls installed in accordance with the provisions of this section shall be considered as load-bearing walls. Cold-formed steel walls constructed in accordance with the provisions of this section shall be limited to sites subjected to a maximum design wind speed of 110 miles per hour (49 m/s) Exposure B or C and a maximum ground snow load of 70 pounds per square foot (3.35 kPa).

603.1.2 In-line framing. Load-bearing cold-formed steel studs constructed in accordance with Section 603 shall be located in-line with joists, trusses and rafters in accordance with Figure 603.1.2 and the tolerances specified as follows:

1. The maximum tolerance shall be ¾ inch (19 mm) between the centerline of the horizontal framing member and the centerline of the vertical framing member.

2. Where the centerline of the horizontal framing member and bearing stiffener are located to one side of the centerline of the vertical framing member, the maximum tolerance shall be $^{1}/_{8}$ inch (3 mm) between the web of the horizontal framing member and the edge of the vertical framing member.

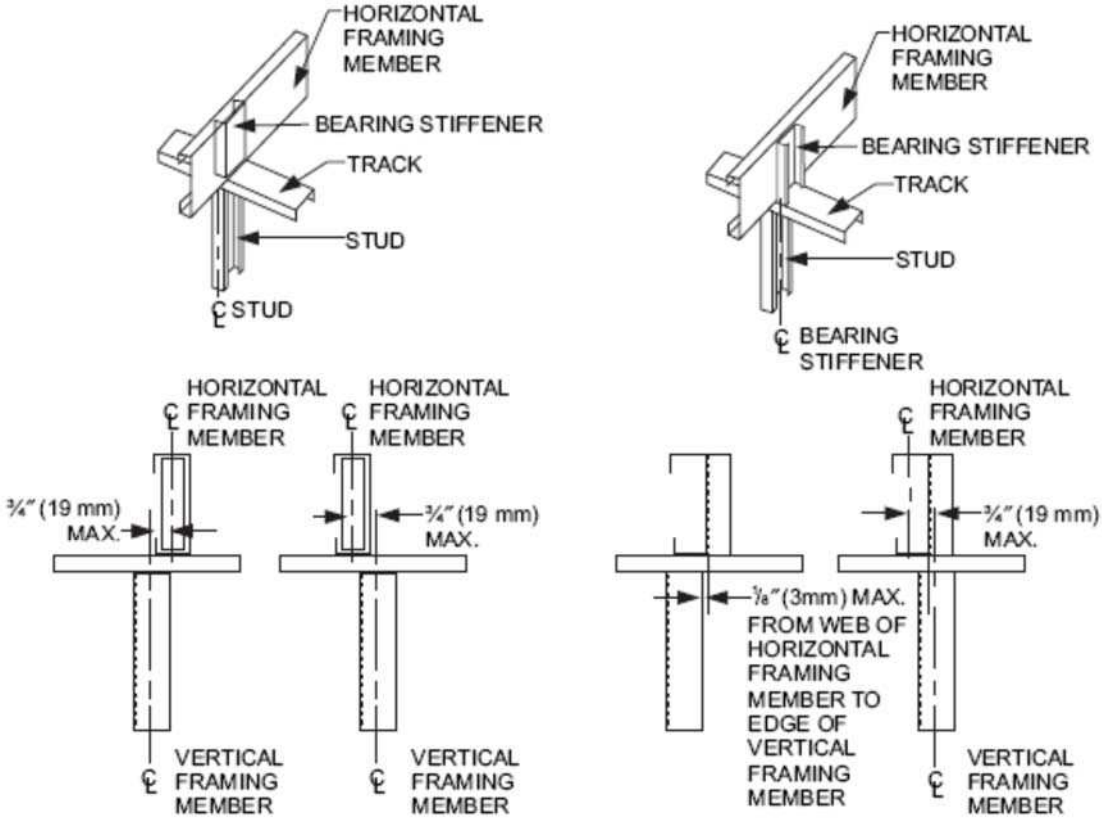

For SI: 1 inch = 25.4 mm,

FIGURE 603.1.2
IN-LINE FRAMING

603.2 Structural framing. Load-bearing cold-formed steel wall framing members shall comply with Figure 603.2(1) and with the dimensional and minimum thickness requirements specified in Tables 603.2(1) and 603.2(2). Tracks shall comply with Figure 603.2(2) and shall have a minimum flange width of 1¼ inches (32 mm). The maximum inside bend radius for members shall be the greater of $^{3}/_{32}$ inch (2.4 mm) minus half the base steel thickness or 1.5 times the base steel thickness.

603.2.1 Material. Load-bearing cold-formed steel framing members shall be cold-formed to shape from structural quality sheet steel complying with the requirements of one of the following:

1. ASTM A 653: Grades 33, and 50 (Class 1 and 3).

2. ASTM A 792: Grades 33, and 50A.

3. ASTM A 1003: Structural Grades 33 Type H, and 50 Type H.

603.2.2 Identification. Load-bearing cold-formed steel framing members shall have a legible label, stencil, stamp or embossment with the following information as a minimum:

1. Manufacturer's identification.

2. Minimum base steel thickness in inches (mm).

3. Minimum coating designation.

4. Minimum yield strength, in kips per square inch (ksi) (MPa).

603.2.3 Corrosion protection. Load-bearing cold-formed steel framing shall have a metallic coating complying with ASTM A 1003 and one of the following:

1. A minimum of G 60 in accordance with ASTM A 653.

2. A minimum of AZ 50 in accordance with ASTM A 792.

603.2.4 Fastening requirements. Screws for steel-to-steel connections shall be installed with a minimum edge distance and center-to-center spacing of ½ inch (12.7 mm), shall be self-drilling tapping and shall conform to ASTM C 1513. Structural sheathing shall be attached to cold-formed steel studs with minimum No. 8 self-drilling tapping screws that conform to ASTM C 1513. Screws for attaching structural sheathing to cold-formed steel wall framing shall have a minimum head diameter of 0.292 inch (7.4 mm) with countersunk heads and shall be installed with a minimum edge distance of $^{3}/_{8}$ inch (9.5 mm). Gypsum board shall be attached to cold-formed steel wall framing with minimum No. 6 screws conforming to ASTM C 954 or ASTM C 1513 with a bugle head style and shall be installed in accordance with Section 702. For all connections, screws shall extend through the steel a minimum of three exposed threads. All fasteners shall have rust inhibitive coating suitable for the installation in which they are being used, or be manufactured from material not susceptible to corrosion.

Where No. 8 screws are specified in a steel-to-steel connection, the required number of screws in the connection is permitted to be reduced in accordance with the reduction factors in Table 603.2.4, when larger screws are used or when one of the sheets of steel being connected is thicker than 33 mils (0.84 mm). When applying the reduction factor, the resulting number of screws shall be rounded up.

TABLE 603.2(1)
LOAD-BEARING COLD-FORMED STEEL STUD SIZES

MEMBER DESIGNATION[a]	WEB DEPTH (inches)	MINIMUM FLANGE WIDTH (inches)	MAXIMUM FLANGE WIDTH (inches)	MINIMUM LIP SIZE (inches)
350S162-t	3.5	1.625	2	0.5
550S162-t	5.5	1.625	2	0.5

For SI: 1 inch = 25.4 mm; 1 mil = 0.0254 mm.

a. The member designation is defined by the first number representing the member depth in hundredths of an inch "S" representing a stud or joist member, the second number representing the flange width in hundredths of an inch, and the letter "t" shall be a number representing the minimum base metal thickness in mils [See Table 603.2(2)].

TABLE 603.2(2)
MINIMUM THICKNESS OF COLD-FORMED STEEL MEMBERS

DESIGNATION THICKNESS (mils)	MINIMUM BASE STEEL THICKNESS (inches)
33	0.0329
43	0.0428
54	0.0538
68	0.0677
97	0.0966

For SI: 1 mil = 0.0254 mm, 1 inch = 25.4 mm.

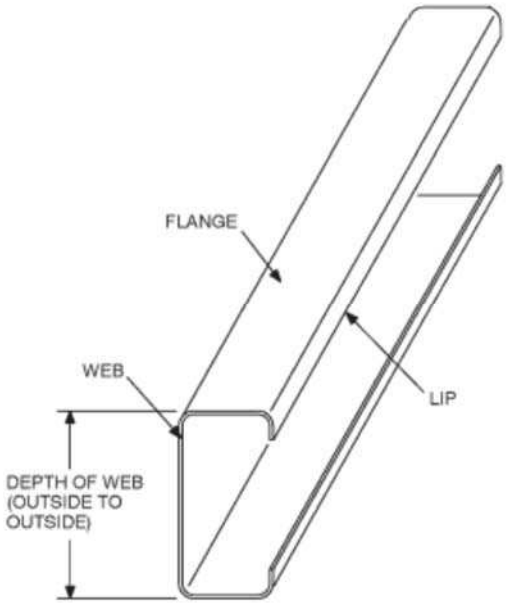

FIGURE 603.2(1)
C-SHAPED SECTION

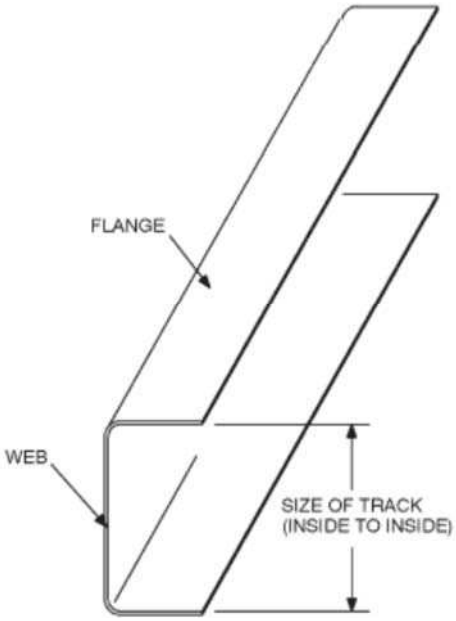

FIGURE 603.2(2)
RACK SECTION

TABLE 603.2.4
SCREW SUBSTITUTION FACTOR

SCREW SIZE	THINNEST CONNECTED STEEL SHEET (mils)	
	33	43
#8	1.0	0.67
#10	0.93	0.62
#12	0.86	0.56

For SI: 1 mil = 0.0254 mm.

603.2.5 Web holes, web hole reinforcing and web hole patching. Web holes, web hole reinforcing and web hole patching shall be in accordance with this section.

603.2.5.1 Web holes. Web holes in wall studs and other structural members shall comply with all of the following conditions:

1. Holes shall conform to Figure 603.2.5.1;

2. Holes shall be permitted only along the centerline of the web of the framing member;

3. Holes shall have a center-to-center spacing of not less than 24 inches (610 mm);

4. Holes shall have a web hole width not greater than 0.5 times the member depth, or 1½ inches (38 mm);

5. Holes shall have a web hole length not exceeding 4½ inches (114 mm); and

6. Holes shall have a minimum distance between the edge of the bearing surface and the edge of the web hole of not less than 10 inches (254 mm).

Framing members with web holes not conforming to the above requirements shall be reinforced in accordance with Section 603.2.5.2, patched in accordance with Section 603.2.5.3 or designed in accordance with accepted engineering practice.

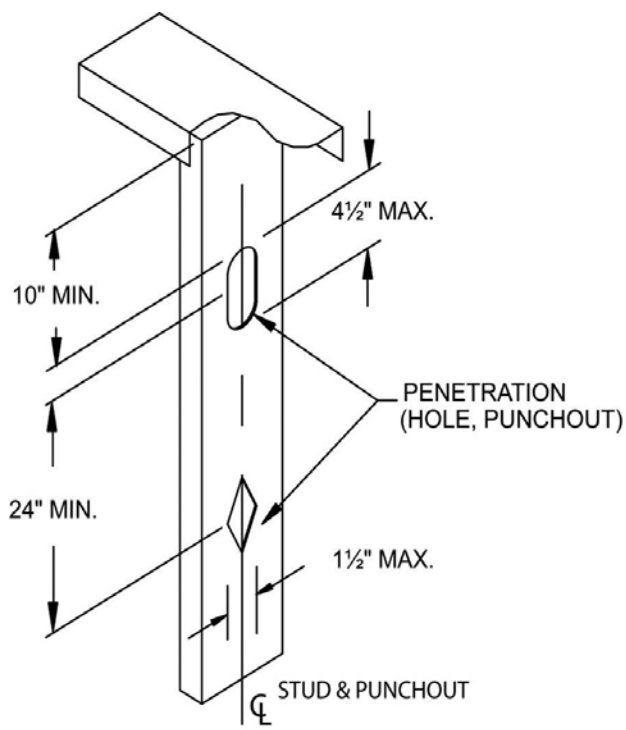

FIGURE 603.2.5.1
WEB HOLES

603.2.5.2 Web hole reinforcing. Web holes in gable endwall studs not conforming to the requirements of Section 603.2.5.1 shall be permitted to be reinforced if the hole is located fully within the center 40 percent of the span and the depth and length of the hole does not exceed 65 percent of the flat width of the web. The reinforcing shall be a steel plate or C-shape section with a hole that does not exceed the web hole size limitations of Section 603.2.5.1 for the member being reinforced. The steel reinforcing shall be the same thickness as the receiving member and shall extend at least 1 inch (25.4 mm) beyond all edges of the hole. The steel reinforcing shall be fastened to the web of the receiving member with No.8 screws spaced no more than 1 inch (25.4 mm) center-to-center along the edges of the patch with minimum edge distance of ½ inch (12.7 mm).

603.2.5.3 Hole patching. Web holes in wall studs and other structural members not conforming to the requirements in Section 603.2.5.1 shall be permitted to be patched in accordance with either of the following methods:

1. Framing members shall be replaced or designed in accordance with accepted engineering practice when web holes exceed the following size limits:

    1.1 The depth of the hole, measured across the web, exceeds 70 percent of the flat width of the web; or

    1.2 The length of the hole measured along the web exceeds 10 inches (254 mm) or the depth of the web, whichever is greater.

2. Web holes not exceeding the dimensional requirements in Section 603.2.5.3, Item 1 shall be patched with a solid steel plate, stud section or track section in accordance with Figure 603.2.5.3. The steel patch shall, as a minimum, be the same thickness as the receiving member and shall extend at least 1 inch (25.4 mm) beyond all edges of the hole. The steel patch shall be fastened to the web of the receiving member with No. 8 screws spaced no more than 1 inch (25.4 mm) center-to-center along the edges of the patch with a minimum edge distance of ½ inch (12.7 mm).

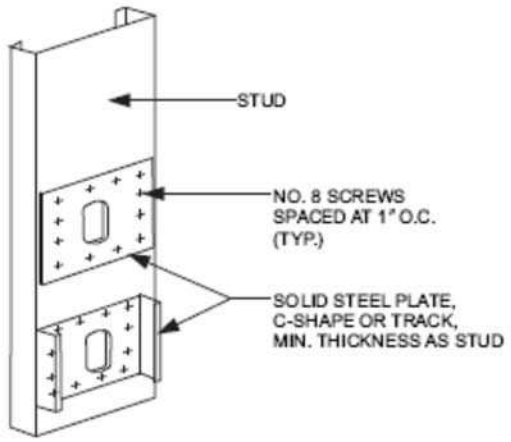

For SI: 1 inch = 25.4 mm.

FIGURE 603.2.5.3
STUD WEB HOLE PATCH

603.3 Wall construction. All exterior cold-formed steel framed walls and interior load-bearing cold-formed steel framed walls shall be constructed in accordance with the provisions of this section.

603.3.1 Wall to foundation or floor connection. Cold-formed steel framed walls shall be anchored to foundations or floors in accordance with Table 603.3.1 and Figure 603.3.1(1), 603.3.1(2) or 603.3.1(3). Anchor bolts shall be located not more than 12 inches (305 mm) from corners or the termination of bottom tracks. Anchor bolts shall extend a minimum of 15 inches (381 mm) into masonry or 7 inches (178 mm) into concrete. Foundation anchor straps shall be permitted, in lieu of anchor bolts, if spaced as required to provide equivalent anchorage to the required anchor bolts and installed in accordance with manufacturer's requirements.

603.3.1.1 Gable endwalls. Gable endwalls with heights greater than 10 feet (3048 mm) shall be anchored to foundations or floors in accordance with Tables 603.3.1.1(1) or 603.3.1.1(2).

603.3.2 Minimum stud sizes. Cold-formed steel walls shall be constructed in accordance with Figures 603.3.1(1), 603.3.1(2), or 603.3.1(3), as applicable. Exterior wall stud size and thickness shall be determined in accordance with the limits set forth in Tables 603.3.2(2) through 603.3.2(31). Interior load-bearing wall stud size and thickness shall be determined in accordance with the limits set forth in Tables 603.3.2(2) through 603.3.2(31) based upon an 85 miles per hour (38 m/s) Exposure A/B wind value and the building width, stud spacing and snow load, as appropriate. Fastening requirements shall be in accordance

with Section 603.2.4 and Table 603.3.2(1). Top and bottom tracks shall have the same minimum thickness as the wall studs.
Exterior wall studs shall be permitted to be reduced to the next thinner size, as shown in Tables 603.3.2(2) through 603.3.2(31), but not less than 33 mils (0.84 mm) ,where both of the following conditions exist:

1. Minimum of ½ inch (12.7 mm) gypsum board is installed and fastened in accordance with Section 702 on the interior surface.

2. Wood structural sheathing panels of minimum $^{7}/_{16}$ inch (11 mm) thick oriented strand board or $^{15}/_{32}$ inch (12 mm) thick plywood is installed and fastened in accordance with Section 603.9.1 and Table 603.3.2(1) on the outside surface.

Interior load-bearing walls shall be permitted to be reduced to the next thinner size, as shown in Tables 603.3.2(2) through 603.3.2(31), but not less than 33 mils (0.84 mm), where a minimum of ½ inch (12.7 mm) gypsum board is installed and fastened in accordance with Section 702 on both sides of the wall. The tabulated stud thickness for load-bearing walls shall be used when the attic load is 10 pounds per square feet (480 Pa) or less. A limited attic storage load of 20 pounds per square feet (960 Pa) shall be permitted provided that the next higher snow load column is used to select the stud size from Tables 603.3.2(2) through 603.3.2(31).

For two-story buildings, the tabulated stud thickness for walls supporting one floor, roof and ceiling shall be used when second floor live load is 30 pounds per square feet (1440 Pa). Second floor live loads of 40 psf (1920 pounds per square feet) shall be permitted provided that the next higher snow load column is used to select the stud size from Tables 603.3.2(2) through 603.3.2(21).
For three-story buildings, the tabulated stud thickness for walls supporting one or two floors, roof and ceiling shall be used when the third floor live load is 30 pounds per square feet (1440 Pa). Third floor live loads of 40 pounds per square feet (1920 Pa) shall be permitted provided that the next higher snow load column is used to select the stud size from Tables 603.3.2(22) through 603.3.2(31).

603.3.2.1 Gable endwalls. The size and thickness of gable endwall studs with heights less than or equal to 10 feet (3048 mm) shall be permitted in accordance with the limits set forth in Tables 603.3.2.1(1) or 603.3.2.1(2). The size and thickness of gable endwall studs with heights greater than 10 feet (3048 mm) shall be determined in accordance with the limits set forth in Tables 603.3.2.1(3) or 603.3.2.1(4).

603.3.3 Stud bracing. The flanges of cold-formed steel studs shall be laterally braced in accordance with one of the following:

1. Gypsum board on both sides, structural sheathing on both sides, or gypsum board on one side and structural sheathing on the other side of load-bearing walls with gypsum board installed with minimum No. 6 screws in accordance with Section 702 and structural sheathing installed in accordance with Section 603.9.1 and Table 603.3.2(1).

2. Horizontal steel straps fastened in accordance with Figure 603.3.3(1) on both sides at mid-height for 8-foot (2438 mm) walls, and at one-third points for 9-foot and 10-foot (2743 mm and 3048 mm) walls. Horizontal steel straps shall be at least 1.5 inches in width and 33 mils in thickness (38 mm by 0.84 mm). Straps shall be attached to the flanges of studs with one No. 8 screw. In-line blocking shall be installed between studs at the termination of all straps and at 12 foot (3658 mm) intervals along the strap. Straps shall be fastened to the blocking with two No. 8 screws.

3. Sheathing on one side and strapping on the other side fastened in accordance with Figure 603.3.3(2). Sheathing shall be installed in accordance with Item 1. Steel straps shall be installed in accordance with Item 2.

TABLE 603.3.1
WALL TO FOUNDATION OR FLOOR CONNECTION REQUIREMENTS[a,b]

FRAMING CONDITION	WIND SPEED (mph) AND EXPOSURE					
	85 B	90 B	100 B 85 C	110 B 90 C	100 C	< 110 C
Wall bottom track to floor per Figure 603.3.1(1)	1-No. 8 screw at 12″ o.c.	1-No. 8 screw at 12″ o.c.	1-No. 8 screw at 12″ o.c.	1-No. 8 screw at 12″ o.c.	2-No. 8 screws at 12″ o.c.	2 No. 8 screws at 12″ o.c.
Wall bottom track to foundation per Figure 603.3.1(2)[d]	½″ minimum diameter anchor bolt at 6′ o.c.	½″ minimum diameter anchor bolt at 6′ o.c.	½″ minimum diameter anchor bolt at 4′ o.c.	½″ minimum diameter anchor bolt at 4′ o.c.	½″ minimum diameter anchor bolt at 4′ o.c.	½″ minimum diameter anchor bolt at 4′ o.c.
Wall bottom track to wood sill per Figure 603.3.1(3)	Steel plate spaced at 4′ o.c., with 4-No. 8 screws and 4-10d or 6-8d common nails	Steel plate spaced at 4′ o.c., with 4-No. 8 screws and 4-10d or 6-8d common nails	Steel plate spaced at 3′ o.c., with 4-No. 8 screws and 4-10d or 6-8d common nails	Steel plate spaced at 3′ o.c., with 4-No. 8 screws and 4-10d or 6-8d common nails	Steel plate spaced at 2′ o.c., with 4-No. 8 screws and 4-10d or 6-8d common nails	Steel plate spaced at 2′ o.c., with 4-No. 8 screws and 4-10d or 6-8d common nails

Wind uplift connector strength to 16″ stud spacing[c]	NR	NR	NR	NR	NR	65 lb per foot of wall length
Wind uplift connector strength for 24″ stud spacing[c]	NR	NR	NR	NR	NR	100 lb per foot of wall length

For SI: 1 inch = 25.4 mm, 1 mile per hour = 0.447 m/s, 1 foot = 304.8 mm, 1 lb = 4.45 N.

a. Anchor bolts are to be located not more than 12 inches from corners or the termination of bottom tracks (e.g., at door openings or corners). Bolts are to extend a minimum of 15 inches into masonry or 7 inches into concrete.

b. All screw sizes shown are minimum.

c. NR = uplift connector not required.

d. Foundation anchor straps are permitted in place of anchor bolts, if spaced as required to provide equivalent anchorage to the required anchor bolts and installed in accordance with manufacturer's requirements.

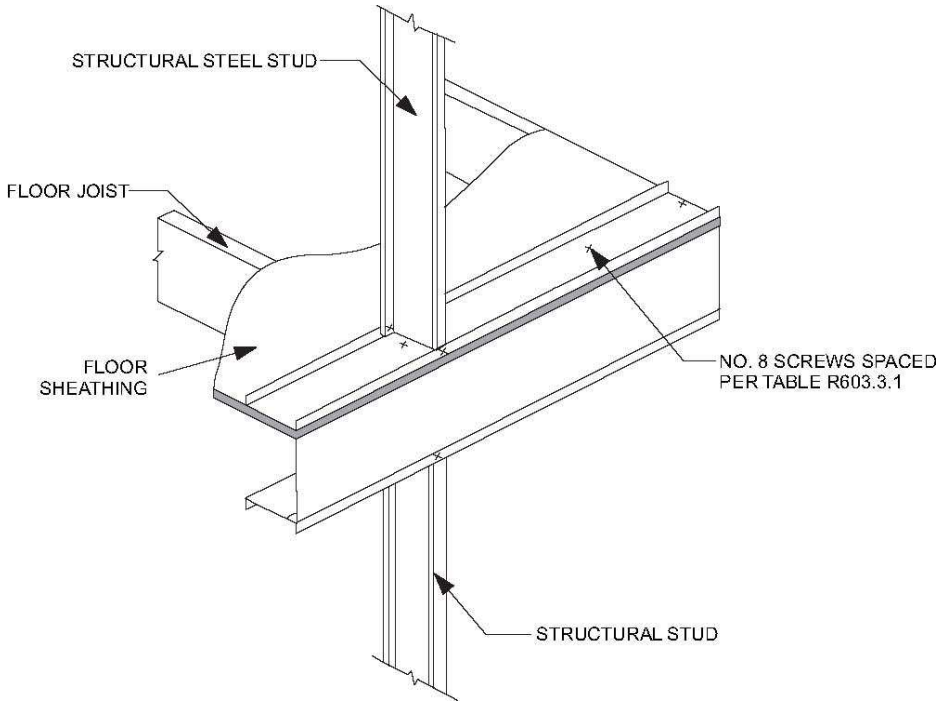

FIGURE 603.3.1(1)
WALL TO FLOOR CONNECTION

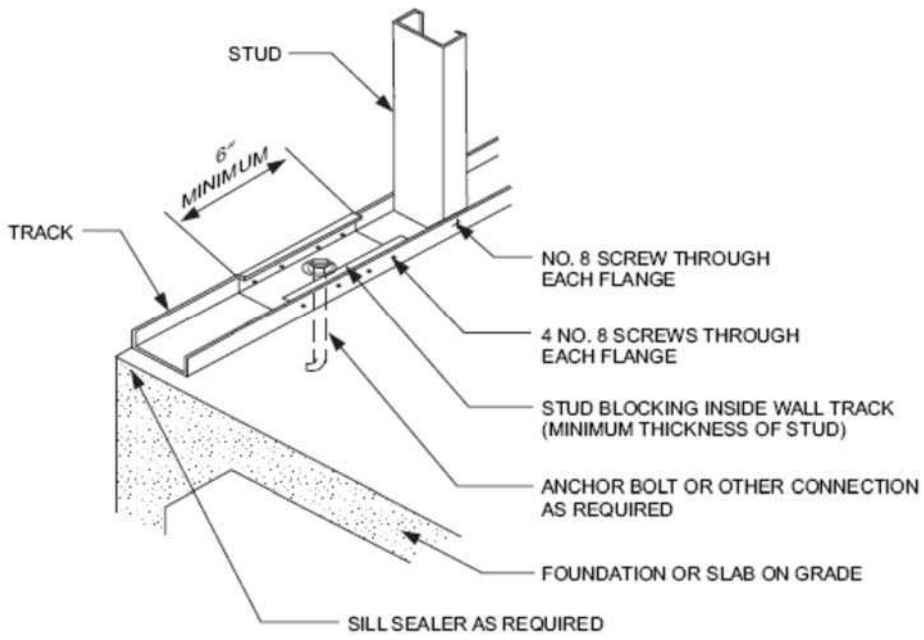

For SI: 1 inch = 25.4 mm.

FIGURE 603.3.1(2)
WALL TO FOUNDATION CONNECTION

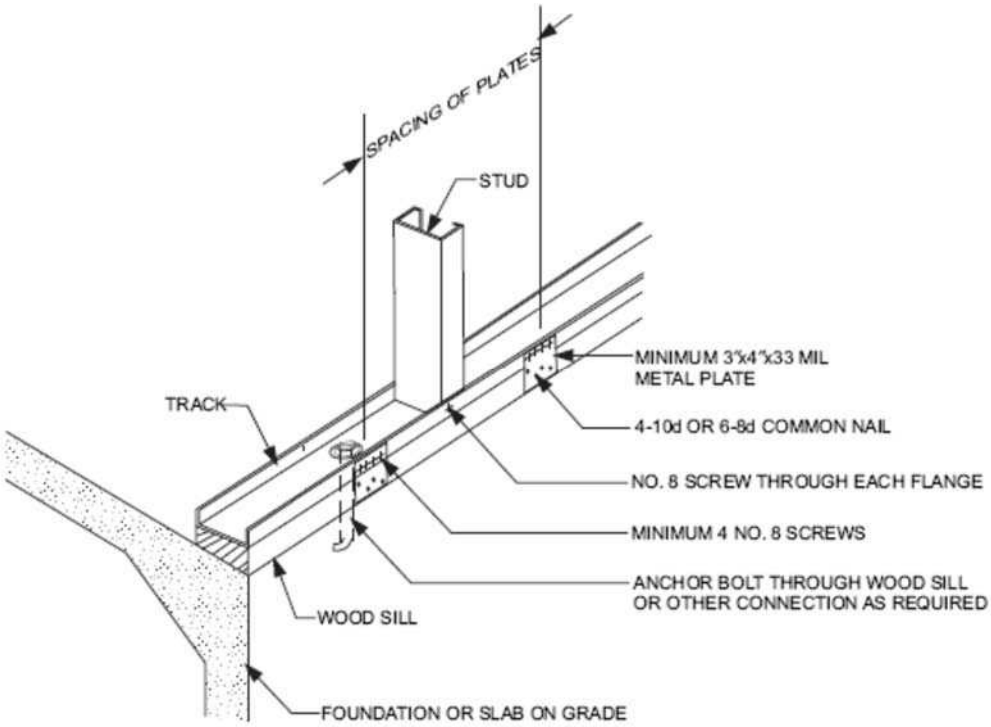

FIGURE 603.3.1(3)
WALL TO WOOD SILL CONNECTION

TABLE 603.3.1.1(1)
GABLE ENDWALL TO FLOOR CONNECTION REQUIREMENTS[a,b,c]

BASIC WIND SPEED (mph)		WALL BOTTOM TRACK TO FLOOR JOIST OR TRACK CONNECTION		
Exposure		Stud height, h (ft)		
B	C	10 < h ≤ 14	14 < h ≤ 18	18 < h ≤ 22
85	—	1-No. 8 screw @ 12″ o.c.	1-No. 8 screw @ 12″ o.c.	1-No. 8 screw @ 12″ o.c.
90	—	1-No. 8 screw @ 12″ o.c.	1-No. 8 screw @ 12″ o.c.	1-No. 8 screw @ 12″ o.c.
100	85	1-No. 8 screw @ 12″ o.c.	1-No. 8 screw @ 12″ o.c.	1-No. 8 screw @ 12″ o.c.
110	90	1-No. 8 screw @ 12″ o.c.	1-No. 8 screw @ 12″ o.c.	2-No. 8 screws @ 12″ o.c.
—	100	1-No. 8 screw @ 12″ o.c.	2-No. 8 screws @ 12″ o.c.	1-No. 8 screw @ 8″ o.c.
—	110	2-No. 8 screws @ 12″ o.c.	1-No. 8 screw @ 8″ o.c.	2-No. 8 screws @ 8″ o.c.

For SI: 1 inch = 25.4 mm, 1 mile per hour = 0.447 m/s, 1 foot = 304.8 mm.

a. Refer to Table 603.3.1.1(2) for gable endwall bottom track to foundation connections.

b. Where attachment is not given, special design is required.

c. Stud height, *h*, is measured from wall bottom track to wall top track or brace connection height.

TABLE 603.3.1.1(2)
GABLE ENDWALL BOTTOM TRACK TO FOUNDATION CONNECTION REQUIREMENTS[a,b,c]

BASIC WIND SPEED (mph)		MINIMUM SPACING FOR ½ IN. DIAMETER ANCHOR BOLTS[d]		
Exposure		Stud height, h (ft)		
B	C	10 < h ≤ 14	14 < h ≤ 18	18 < h ≤ 22
85	—	6′ - 0″ o.c.	6′ - 0″ o.c.	6′ - 0″ o.c.
90	—	6′ - 0″ o.c.	5′ - 7″ o.c.	6′ - 0″ o.c.
100	85	5′ - 10″ o.c.	6′ - 0″ o.c.	6′ - 0″ o.c.
110	90	4′ - 10″ o.c.	5′ - 6″ o.c.	6′ - 0″ o.c.
—	100	4′ - 1″ o.c.	6′ - 0″ o.c.	6′ - 0″ o.c.
—	110	5′ - 1″ o.c.	6′ - 0″ o.c.	5′ - 2″ o.c.

For SI: 1 inch = 25.4 mm, 1 mile per hour = 0.447 m/s, 1 foot = 304.8 mm.
a. Refer to Table 603.3.1.1(1) for gable endwall bottom track to floor joist or track connection connections.
b. Where attachment is not given, special design is required.
c. Stud height, *h*, is measured from wall bottom track to wall top track or brace connection height.
d. Foundation anchor straps are permitted in place of anchor bolts if spaced as required to provide equivalent anchorage to the required anchor bolts and installed in accordance with manufacturer's requirements.

603.3.4 Cutting and notching. Flanges and lips of cold-formed steel studs and headers shall not be cut or notched.

603.3.5 Splicing. Steel studs and other structural members shall not be spliced. Tracks shall be spliced in accordance with Figure 603.3.5.

603.4 Corner framing. In exterior walls, corner studs and the top tracks shall be installed in accordance with Figure 603.4.

603.5 Exterior wall covering. The method of attachment of exterior wall covering materials to cold-formed steel stud wall framing shall conform to the manufacturer's installation instructions.

603.6 Headers. Headers shall be installed above all wall openings in exterior walls and interior load-bearing walls. Box beam headers and back-to-back headers each shall be formed from two equal sized C-shaped members in accordance with Figures 603.6(1) and 603.6(2), respectively, and Tables 603.6(1) through 603.6(24). L-shaped headers shall be permitted to be constructed in accordance with AISI S230. Alternately, headers shall be permitted to be designed and constructed in accordance with AISI S100, Section D4.

603.6.1 Headers in gable endwalls. Box beam and back-to-back headers in gable endwalls shall be permitted to be constructed in accordance with Section

603.6 or with the header directly above the opening in accordance with Figures 603.6.1(1) and 603.6.1(2) and the following provisions:

1. Two 362S162-33 for openings less than or equal to 4 feet (1219 mm).

2. Two 600S162-43 for openings greater than 4 feet (1219 mm) but less than or equal to 6 feet (1830 mm).

3. Two 800S162-54 for openings greater than 6 feet (1829 mm) but less than or equal to 9 feet (2743 mm).

603.7 Jack and king studs. The number of jack and king studs installed on each side of a header shall comply with Table 603.7(1). King, jack and cripple studs shall be of the same dimension and thickness as the adjacent wall studs. Headers shall be connected to king studs in accordance with Table 603.7(2) and the following provisions:

1. For box beam headers, one-half of the total number of required screws shall be applied to the header and one half to the king stud by use of C-shaped or track member in accordance with Figure 603.6(1). The track or C-shape sections shall extend the depth of the header minus ½ inch (12.7 mm) and shall have a minimum thickness not less than that of the wall studs.

2. For back-to-back headers, one-half the total number of screws shall be applied to the header and one-half to the king stud by use of a minimum 2-inch-by-2-inch (51 mm × 51 mm) clip angle in accordance with Figure 603.6(2). The clip angle shall extend the depth of the header minus ½ inch (12.7 mm) and shall have a minimum thickness not less than that of the wall studs. Jack and king studs shall be interconnected with structural sheathing in accordance with Figures 603.6(1) and 603.6(2).

603.8 Head and sill track. Head track spans above door and window openings and sill track spans beneath window openings shall comply with Table 603.8. For openings less than 4 feet (1219 mm) in height that have both a head track and a sill track, multiplying the spans by 1.75 shall be permitted in Table 603.8. For openings less than or equal to 6 feet (1829 mm) in height that have both a head track and a sill track, multiplying the spans in Table 603.8 by 1.50 shall be permitted.

603.9 Structural sheathing. Structural sheathing shall be installed in accordance with Figure 603.9 and this section on all sheathable exterior wall surfaces, including areas above and below openings.

603.9.1 Sheathing materials. Structural sheathing panels shall consist of minimum $^{7}/_{16}$-inch (11 mm) thick oriented strand board or $^{15}/_{32}$-inch (12 mm) thick plywood.

603.9.2 Determination of minimum length of full height sheathing. The minimum length of full height sheathing on each braced wall line shall be determined by multiplying the length of the braced wall line by the percentage obtained from Table 603.9.2(1) and by the plan aspect-ratio adjustment factors obtained from Table 603.9.2(2). The minimum length of full height sheathing shall not be less than 20 percent of the braced wall line length.

To be considered full height sheathing, structural sheathing shall extend from the bottom to the top of the wall without interruption by openings. Only sheathed, full height wall sections, uninterrupted by openings, which are a minimum of 48 inches (1219 mm) wide, shall be counted toward meeting the minimum percentages in Table R603.9.2(1). In addition, structural sheathing shall comply with all of the following requirements:

1. Be installed with the long dimension parallel to the stud framing (i.e. vertical orientation) and shall cover the full vertical height of wall from the bottom of the bottom track to the top of the top track of each story. Installing the long dimension perpendicular to the stud framing or using shorter segments shall be permitted provided that the horizontal joint is blocked as described in Item 2 below.

2. Be blocked when the long dimension is installed perpendicular to the stud framing (i.e. horizontal orientation). Blocking shall be a minimum of 33 mil (0.84 mm) thickness. Each horizontal structural sheathing panel shall be fastened with No. 8 screws spaced at 6 inches (152 mm) on center to the blocking at the joint.

3. Be applied to each end (corners) of each of the exterior walls with a minimum 48 inch (1219 mm) wide panel.

603.9.2.1 The minimum percentage of full-height structural sheathing shall be multiplied by 1.10 for 9 foot (2743 mm) high walls and multiplied by 1.20 for 10 foot (3048 mm) high walls.

603.9.2.2 For hip roofed homes, the minimum percentages of full height sheathing in Table 603.9.2(1), based upon wind, shall be permitted to be

multiplied by a factor of 0.95 for roof slopes not exceeding 7:12 and a factor of 0.9 for roof slopes greater than 7:12.

603.9.2.3 In the lowest story of a dwelling, multiplying the percentage of full height sheathing required in Table 603.9.2(1) by 0.6, shall be permitted provided hold down anchors are provided in accordance with Section 603.9.4.2.

603.9.3 Structural sheathing fastening. All edges and interior areas of structural sheathing panels shall be fastened to framing members and tracks in accordance with Figure 603.9 and Table 603.3.2(1). Screws for attachment of structural sheathing panels shall be bugle-head, flat-head, or similar head style with a minimum head diameter of 0.29 inch (8 mm).

For continuously-sheathed braced wall lines using wood structural panels installed with No. 8 screws spaced 4-inches (102 mm) on center at all panel edges and 12 inches (304.8 mm) on center on intermediate framing members, the following shall apply:

1. Multiplying the percentages of full height sheathing in Table 603.9.2(1) by 0.72 shall be permitted.

2. For bottom track attached to foundations or framing below, the bottom track anchor or screw connection spacing in Table 505.3.1(1) and Table 603.3.1 shall be multiplied by 2/3.

603.9.4 Uplift connection requirements. Uplift connections shall be provided in accordance with this section.

603.9.4.1 Where wind speeds are in excess of 100 miles per hour (45 m/s), Exposure C, walls shall be provided wind direct uplift connections in accordance with AISI S230, Section E13.3, and AISI S230, Section F7.2, as required for 110 miles per hour (49 m/s), Exposure C.

603.9.4.2 Where the percentage of full height sheathing is adjusted in accordance with Section 603.9.2.3, a hold-down anchor, with a strength of 4,300 pounds (19 kN), shall be provided at each end of each full-height sheathed wall section used to meet the minimum percent sheathing requirements of Section 603.9.2. Hold down anchors shall be attached to back-to-back studs; structural sheathing panels shall have edge fastening to the studs, in accordance with Section 603.9.3 and AISI S230, Table E11-1.

A single hold down anchor, installed in accordance with Figure 603.9.2, shall be permitted at the corners of buildings.

603.9.5 Structural sheathing for stone and masonry veneer. In Seismic Design Category C, where stone and masonry veneer is installed in accordance with Section 703.7, the length of structural sheathing for walls supporting one story, roof and ceiling shall be the greater of the amount required by Section 603.9.2 or 36 percent, modified by Section 603.9.2 except Section 603.9.2.2 shall not be permitted.

TABLE 603.3.2(1)
WALL FASTENING SCHEDULE[a]

DESCRIPTION OF BUILDING ELEMENT	NUMBER AND SIZE OF FASTENERS[a]	SPACING OF FASTENERS
Floor joist to track of load-bearing wall	2-No. 8 screws	Each joist
Wall stud to top or bottom track	2-No. 8 screws	Each end of stud, one per flange
Structural sheathing to wall studs	No. 8 screws[b]	6″ o.c. on edges and 12″ o.c. at intermediate supports
Roof framing to wall	Approved design or tie down in accordance with Section 802.11	

For SI: 1 inch = 25.4 mm.
a. All screw sizes shown are minimum.
b. Screws for attachment of structural sheathing panels are to be bugle-head, flat-head, or similar head styles with a minimum head diameter of 0.29 inch.

TABLE 603.3.2(2)
24-FOOT-WIDE BUILDING SUPPORTING ROOF AND CEILING ONLY[a, b, c]
33 ksi STEEL

WIND SPEED		MEMBER SIZE	STUD SPACING (inches)	MINIMUM STUD THICKNESS (mils)											
				8-Foot Studs				9-Foot Studs				10-Foot Studs			
				Ground Snow Load (psf)											
Exp. B	Exp. C			20	30	50	70	20	30	50	70	20	30	50	70
85 mph	—	350S162	16	33	33	33	33	33	33	33	33	33	33	33	33
			24	33	33	33	43	33	33	33	43	33	33	43	43
		550S162	16	33	33	33	33	33	33	33	33	33	33	33	33
			24	33	33	33	33	33	33	33	33	33	33	33	33
90 mph	—	350S162	16	33	33	33	33	33	33	33	33	33	33	33	33
			24	33	33	33	43	33	33	33	43	33	33	43	43
		550S162	16	33	33	33	33	33	33	33	33	33	33	33	33
			24	33	33	33	33	33	33	33	33	33	33	33	33
100 mph	85 mph	350S162	16	33	33	33	33	33	33	33	33	33	33	33	33
			24	33	33	33	43	33	33	33	43	43	43	43	43
		550S162	16	33	33	33	33	33	33	33	33	33	33	33	33
			24	33	33	33	43	33	33	33	33	33	33	33	43

110 mph	90 mph	350S162	16	33	33	33	33	33	33	33	33	33	33	33	33
			24	33	33	33	43	43	43	43	43	43	43	43	54
		550S162	16	33	33	33	33	33	33	*33*	33	33	33	33	33
			24	33	33	33	43	33	33	33	33	43	43	43	43
—	100 mph	350S162	16	33	33	33	33	33	33	33	33	43	43	43	43
			24	43	43	43	43	43	43	43	43	54	54	54	54
		550S162	16	33	33	33	33	33	33	33	33	33	33	33	33
			24	33	33	33	43	43	43	43	43	43	43	43	43
—	110 mph	350S162	16	33	33	33	33	43	43	43	43	43	43	43	43
			24	43	43	43	43	54	54	54	54	68	68	68	68
		550S162	16	33	33	33	33	33	33	33	33	33	33	33	33
			24	33	43	43	43	43	43	43	43	43	43	43	43

For SI: 1 inch = 25.4 mm, 1 foot = 304.8 mm, 1 mil = 0.0254 mm, 1 mile per hour = 0.447 m/s, 1 pound per square foot = 0.0479 kPa, 1 ksi = 1000 psi = 6.895 MPa.

a. Deflection criterion: *L*/240.

b. Design load assumptions:
Second floor dead load is 10 psf.
Second floor live load is 30 psf.
Roof/ceiling dead load is 12 psf.
Attic live load is 10 psf.

c. Building width is in the direction of horizontal framing members supported by the wall studs.

TABLE 603.3.2(3)
24-FOOT-WIDE BUILDING SUPPORTING ROOF AND CEILING ONLY[a,b,c]
50 ksi STEEL

WIND SPEED		MEMBER SIZE	STUD SPACING (inches)	MINIMUM STUD THICKNESS (mils)											
				8-Foot Studs				9-Foot Studs				10-Foot Studs			
				Ground Snow Load (psf)											
Exp. B	Exp. C			20	30	50	70	20	30	50	70	20	30	50	70
85 mph	—	350S162	16	33	33	33	33	33	33	33	33	33	33	33	33
			24	33	33	33	43	33	33	33	33	33	33	33	43
		550S162	16	33	33	33	33	33	33	33	33	33	33	33	33
			24	33	33	33	33	33	33	33	33	33	33	33	33
90 mph	—	350S162	16	33	33	33	33	33	33	33	33	33	33	33	33
			24	33	33	33	43	33	33	33	33	33	33	33	43
		550S162	16	33	33	33	33	33	33	33	33	33	33	33	33
			24	33	33	33	33	33	33	33	33	33	33	33	33
100 mph	85 mph	350S162	16	33	33	33	33	33	33	33	33	33	33	33	33
			24	33	33	33	43	33	33	33	33	33	33	33	43
		550S162	16	33	33	33	33	33	33	33	33	33	33	33	33
			24	33	33	33	33	33	33	33	33	33	33	33	33

110 mph	90 mph	350S162	16	33	33	33	33	33	33	33	33	33	33	33	33
			24	33	33	33	43	33	33	33	43	43	43	43	43
		550S162	16	33	33	33	33	33	33	33	33	33	33	33	33
			24	33	33	33	33	33	33	33	33	33	33	33	33
—	100 mph	350S162	16	33	33	33	33	33	33	33	33	33	33	33	33
			24	33	33	33	43	43	43	43	43	43	43	43	43
		550S162	16	33	33	33	33	33	33	33	33	33	33	33	33
			24	33	33	33	33	33	33	33	33	33	33	33	33
—	110 mph	350S162	16	33	33	33	33	33	33	33	33	33	33	33	33
			24	33	33	33	43	43	43	43	43	54	54	54	54
		550S162	16	33	33	33	33	33	33	33	33	33	33	33	33
			24	33	33	33	33	33	33	33	33	33	33	33	33

For SI: 1 inch = 25.4 mm, 1 foot = 304.8 mm, 1 mil = 0.0254 mm, 1 mile per hour = 0.447 m/s, 1 pound per square foot = 0.0479kPa, 1 ksi = 1000 psi = 6.895 MPa.

a. Deflection criterion: *L*/240.

b. Design load assumptions: Second floor dead load is 10 psf. Second floor live load is 30 psf. Roof/ceiling dead load is 12 psf. Attic live load is 10 psf.

c. Building width is in the direction of horizontal framing members supported by the wall studs.

TABLE 603.3.2(4)
28-FOOT-WIDE BUILDING SUPPORTING ROOF AND CEILING ONLY[a,b,c]
33 ksi STEEL

WIND SPEED		MEMBER SIZE	STUD SPACING (inches)	MINIMUM STUD THICKNESS (mils)											
				8-Foot Studs				9-Foot Studs				10-Foot Studs			
				Ground Snow Load (psf)											
Exp. B	Exp. C			20	30	50	70	20	30	50	70	20	30	50	70
85 mph	—	350S162	16	33	33	33	33	33	33	33	33	33	33	33	33
			24	33	33	43	43	33	33	43	43	33	33	43	54
		550S162	16	33	33	33	33	33	33	33	33	33	33	33	33
			24	33	33	33	43	33	33	33	43	33	33	33	43
90 mph	—	350S162	16	33	33	33	33	33	33	33	33	33	33	33	33
			24	33	33	43	43	33	33	43	43	33	33	43	54
		550S162	16	33	33	33	33	33	33	33	33	33	33	33	33
			24	33	33	33	43	33	33	33	43	33	33	33	43
100 mph	85 mph	350S162	16	33	33	33	33	33	33	33	33	33	33	33	33
			24	33	33	43	43	33	33	43	43	43	43	43	54
		550S162	16	33	33	33	33	33	33	33	33	33	33	33	33
			24	33	33	33	43	33	33	33	43	33	33	33	43

110 mph	90 mph	350S162	16	33	33	33	33	33	33	33	33	33	33	33	43
			24	33	33	43	43	43	43	43	43	43	43	43	54
		550S162	16	33	33	33	33	33	33	33	33	33	33	33	33
			24	33	33	33	43	33	33	33	43	33	33	33	43
—	100 mph	350S162	16	33	33	33	33	33	33	33	33	43	43	43	43
			24	43	43	43	54	43	43	43	54	54	54	54	54
		550S162	16	33	33	33	33	33	33	33	33	33	33	33	33
			24	33	33	33	43	33	33	33	43	33	33	33	43
—	110 mph	350S162	16	33	33	33	33	43	43	43	43	43	43	43	43
			24	43	43	43	54	54	54	54	54	68	68	68	68
		550S162	16	33	33	33	33	33	33	33	33	33	33	33	33
			24	33	33	33	43	33	33	33	43	43	43	43	43

For SI: 1 inch = 25.4 mm, 1 foot = 304.8 mm, 1 mil = 0.0254 mm, 1 mile per hour = 0.447 m/s, 1 pound per square foot = 0.0479kPa, 1 ksi = 1000 psi = 6.895 MPa.

a. Deflection criterion: *L*/240.

b. Design load assumptions: Second floor dead load is 10 psf. Second floor live load is 30 psf. Roof/ceiling dead load is 12 psf. Attic live load is 10 psf.

c. Building width is in the direction of horizontal framing members supported by the wall studs.

TABLE 603.3.2(5)
28-FOOT-WIDE BUILDING SUPPORTING ROOF AND CEILING ONLY[a,b,c]
50 ksi STEEL

WIND SPEED		MEMBER SIZE	STUD SPACING (inches)	MINIMUM STUD THICKNESS (mils)											
				8-Foot Studs				9-Foot Studs				10-Foot Studs			
				Ground Snow Load (psf)											
Exp. B	Exp. C			20	30	50	70	20	30	50	70	20	30	50	70
85 mph	—	350S162	16	33	33	33	33	33	33	33	33	33	33	33	33
			24	33	33	33	43	33	33	33	43	33	33	33	43
		550S162	16	33	33	33	33	33	33	33	33	33	33	33	33
			24	33	33	33	33	33	33	33	33	33	33	33	33
90 mph	—	350S162	16	33	33	33	33	33	33	33	33	33	33	33	33
			24	33	33	33	43	33	33	33	43	33	33	33	43
		550S162	16	33	33	33	33	33	33	33	33	33	33	33	33
			24	33	33	33	33	33	33	33	33	33	33	33	33
100 mph	85 mph	350S162	16	33	33	33	33	33	33	33	33	33	33	33	33
			24	33	33	33	43	33	33	33	43	33	33	43	43
		550S162	16	33	33	33	33	33	33	33	33	33	33	33	33
			24	33	33	33	33	33	33	33	33	33	33	33	33

110 mph	90 mph	350S162	16	33	33	33	33	33	33	33	33	33	33	33	33
			24	33	33	33	43	33	33	33	43	43	43	43	43
		550S162	16	33	33	33	33	33	33	33	33	33	33	33	33
			24	33	33	33	33	33	33	33	33	33	33	33	33
—	100 mph	350S162	16	33	33	33	33	33	33	33	33	33	33	33	33
			24	33	33	33	43	43	43	43	43	43	43	43	43
		550S162	16	33	33	33	33	33	33	33	33	33	33	33	33
			24	33	33	33	43	33	33	33	33	33	33	33	33
—	110 mph	350S162	16	33	33	33	33	33	33	33	33	33	33	33	33
			24	33	33	43	43	43	43	43	43	54	54	54	54
		550S162	16	33	33	33	33	33	33	33	33	33	33	33	33
			24	33	33	33	33	33	33	33	33	33	33	33	43

For SI: 1 inch = 25.4 mm, 1 foot = 304.8 mm, 1 mil = 0.0254 mm, 1 mile per hour = 0.447 m/s, 1 pound per square foot = 0.0479kPa, 1 ksi = 1000 psi = 6.895 MPa.

a. Deflection criterion: *L*/240.

b. Design load assumptions: Second floor dead load is 10 psf. Second floor live load is 30 psf. Roof/ceiling dead load is 12 psf. Attic live load is 10 psf.

c. Building width is in the direction of horizontal framing members supported by the wall studs.

TABLE 603.3.2(6)
32-FOOT-WIDE BUILDING SUPPORTING ROOF AND CEILING ONLY[a,b,c]
33 ksi STEEL

WIND SPEED		MEMBER SIZE	STUD SPACING (inches)	MINIMUM STUD THICKNESS (mils)											
				8-Foot Studs				9-Foot Studs				10-Foot Studs			
				Ground Snow Load (psf)											
Exp. B	Exp. C			20	30	50	70	20	30	50	70	20	30	50	70
85 mph	—	350S162	16	33	33	33	33	33	33	33	33	33	33	33	43
			24	33	33	43	54	33	33	43	43	33	33	43	54
		550S162	16	33	33	33	33	33	33	33	33	33	33	33	33
			24	33	33	33	43	33	33	33	43	33	33	33	43
90 mph	—	350S162	16	33	33	33	33	33	33	33	33	33	33	33	43
			24	33	33	43	54	33	33	43	43	33	33	43	54
		550S162	16	33	33	33	33	33	33	33	33	33	33	33	33
			24	33	33	33	43	33	33	33	43	33	33	33	43
100 mph	85 mph	350S162	16	33	33	33	33	33	33	33	33	33	33	33	43
			24	33	33	43	54	33	33	43	54	43	43	43	54
		550S162	16	33	33	33	33	33	33	33	33	33	33	33	33
			24	33	33	33	43	33	33	33	43	33	33	33	43

110 mph	90 mph	350S162	16	33	33	33	43	33	33	33	33	33	33	33	43
			24	33	33	43	54	43	43	43	54	43	43	43	54
		550S162	16	33	33	33	33	33	33	33	33	33	33	33	33
			24	33	33	33	43	33	33	33	43	33	33	43	43
—	100 mph	350S162	16	33	33	33	43	33	33	33	43	43	43	43	43
			24	43	43	43	54	43	43	43	54	54	54	54	54
		550S162	16	33	33	33	33	33	33	33	33	33	33	33	33
			24	33	33	43	43	33	33	33	43	33	33	43	43
—	110 mph	350S162	16	33	33	33	43	43	43	43	43	43	43	43	43
			24	43	43	43	54	54	54	54	54	68	68	68	68
		550S162	16	33	33	33	33	33	33	33	33	33	33	33	33
			24	33	33	43	43	33	33	43	43	43	43	43	43

For SI: 1 inch = 25.4 mm, 1 foot = 304.8 mm, 1 mil = 0.0254 mm, 1 mile per hour = 0.447 m/s, 1 pound per square foot = 0.0479kPa, 1 ksi = 1000 psi = 6.895 MPa.

a. Deflection criterion: *L*/240.

b. Design load assumptions: Second floor dead load is 10 psf. Second floor live load is 30 psf. Roof/ceiling dead load is 12 psf. Attic live load is 10 psf.

c. Building width is in the direction of horizontal framing members supported by the wall studs.

TABLE 603.3.2(7)
32-FOOT-WIDE BUILDING SUPPORTING ROOF AND CEILING ONLY[a,b,c]
50 ksi STEEL

WIND SPEED		MEMBER SIZE	STUD SPACING (inches)	MINIMUM STUD THICKNESS (mils)											
				8-Foot Studs				9-Foot Studs				10-Foot Studs			
				Ground Snow Load (psf)											
Exp. B	Exp. C			20	30	50	70	20	30	50	70	20	30	50	70
85 mph	—	350S162	16	33	33	33	33	33	33	33	33	33	33	33	33
			24	33	33	33	43	33	33	33	43	33	33	43	43
		550S162	16	33	33	33	33	33	33	33	33	33	33	33	33
			24	33	33	33	43	33	33	33	33	33	33	33	43
90 mph	—	350S162	16	33	33	33	33	33	33	33	33	33	33	33	33
			24	33	33	33	43	33	33	33	43	33	33	43	43
		550S162	16	33	33	33	33	33	33	33	33	33	33	33	33
			24	33	33	33	43	33	33	33	33	33	33	33	43
100 mph	85 mph	350S162	16	33	33	33	33	33	33	33	33	33	33	33	33
			24	33	33	43	43	33	33	33	43	33	33	43	43
		550S162	16	33	33	33	33	33	33	33	33	33	33	33	33
			24	33	33	33	43	33	33	33	33	33	33	33	43

110 mph	90 mph	350S162	16	33	33	33	33	33	33	33	33	33	33	33	33
			24	33	33	43	43	33	33	33	43	43	43	43	54
		550S162	16	33	33	33	33	33	33	33	33	33	33	33	33
			24	33	33	33	43	33	33	33	33	33	33	33	43
—	100 mph	350S162	16	33	33	33	33	33	33	33	33	33	33	33	33
			24	33	33	43	43	43	43	43	43	43	43	43	54
		550S162	16	33	33	33	33	33	33	33	33	33	33	33	33
			24	33	33	33	43	33	33	33	43	33	33	33	43
—	110 mph	350S162	16	33	33	33	33	33	33	33	33	33	33	33	43
			24	33	33	43	43	43	43	43	43	54	54	54	54
		550S162	16	33	33	33	33	33	33	33	33	33	33	33	33
			24	33	33	33	43	33	33	33	43	33	33	33	43

For SI: 1 inch = 25.4 mm, 1 foot = 304.8 mm, 1 mil = 0.0254 mm, 1 mile per hour = 0.447 m/s, 1 pound per square foot = 0.0479kPa, 1 ksi = 1000 psi = 6.895 MPa.

a. Deflection criterion: *L*/240.

b. Design load assumptions: Second floor dead load is 10 psf. Second floor live load is 30 psf. Roof/ceiling dead load is 12 psf. Attic live load is 10 psf.

c. Building width is in the direction of horizontal framing members supported by the wall studs.

TABLE 603.3.2(8)
36-FOOT-WIDE BUILDING SUPPORTING ROOF AND CEILING ONLY[a,b,c]
33 ksi STEEL

WIND SPEED		MEMBER SIZE	STUD SPACING (inches)	MINIMUM STUD THICKNESS (mils)											
				8-Foot Studs				9-Foot Studs				10-Foot Studs			
				Ground Snow Load (psf)											
Exp. B	Exp. C			20	30	50	70	20	30	50	70	20	30	50	70
85 mph	—	350S162	16	33	33	33	43	33	33	33	43	33	33	33	43
			24	33	33	43	54	33	33	43	54	33	43	43	54
		550S162	16	33	33	33	33	33	33	33	33	33	33	33	33
			24	33	33	33	43	33	33	43	43	33	33	43	43
90 mph	—	350S162	16	33	33	33	43	33	33	33	43	33	33	33	43
			24	33	33	43	54	33	33	43	54	33	43	43	54
		550S162	16	33	33	33	33	33	33	33	33	33	33	33	33
			24	33	33	43	43	33	33	43	43	33	33	43	43

100 mph	85 mph	350S162	16	33	33	33	43	33	33	33	43	33	33	33	43
			24	33	33	43	54	33	33	43	54	43	43	54	54
		550S162	16	33	33	33	33	33	33	33	33	33	33	33	33
			24	33	33	43	43	33	33	43	43	33	33	43	43
110 mph	90 mph	350S162	16	33	33	33	43	33	33	33	33	33	33	33	43
			24	33	33	43	54	43	43	43	43	43	43	54	68
		550S162	16	33	33	33	33	33	33	33	33	33	33	33	33
			24	33	33	43	43	33	33	43	43	33	33	43	43
—	100 mph	350S162	16	33	33	33	43	33	33	33	43	43	43	43	43
			24	43	43	43	54	43	43	43	54	54	54	54	68
		550S162	16	33	33	33	33	33	33	33	33	33	33	33	33
			24	33	33	43	43	33	33	43	43	33	33	43	43
—	110 mph	350S162	16	33	33	33	43	43	43	43	43	43	43	43	43
			24	43	43	54	54	54	54	54	54	68	68	68	68
		550S162	16	33	33	33	33	33	33	33	33	33	33	33	33
			24	33	33	43	54	33	33	43	43	43	43	43	54

For SI: 1 inch = 25.4 mm, 1 foot = 304.8 mm, 1 mil = 0.0254 mm, 1 mile per hour = 0.447 m/s, 1 pound per square foot = 0.0479 kPa, 1 ksi = 1000 psi = 6.895 MPa.

a. Deflection criterion: *L*/240.

b. Design load assumptions: Second floor dead load is 10 psf. Second floor live load is 30 psf. Roof/ceiling dead load is 12 psf. Attic live load is 10 psf.

c. Building width is in the direction of horizontal framing members supported by the wall studs.

TABLE 603.3.2(9)
36-FOOT-WIDE BUILDING SUPPORTING ROOF AND CEILING ONLY[a,b,c]
50 ksi STEEL

WIND SPEED		MEMBER SIZE	STUD SPACING (inches)	MINIMUM STUD THICKNESS (mils)											
				8-Foot Studs				9-Foot Studs				10-Foot Studs			
				Ground Snow Load (psf)											
Exp. B	Exp. C			20	30	50	70	20	30	50	70	20	30	50	70
85 mph	—	350S162	16	33	33	3	33	33	33	33	33	33	33	33	3
			24	33	33	43	43	33	33	43	43	33	33	43	54
		550S162	16	33	33	33	33	33	33	33	33	33	33	33	33
			24	33	33	33	43	33	33	33	43	33	33	33	43
90 mph	—	350S162	16	33	33	33	3	33	33	3	3	33	33	33	33
			24	33	33	43	43	33	33	43	43	33	33	43	54
		550S162	16	33	33	33	33	33	33	33	33	33	33	33	33
			24	33	33	33	43	33	33	33	43	33	33	33	43

100 mph	85 mph	350S162	16	33	33	33	33	33	33	33	33	33	33	33	33
			24	33	33	43	43	33	33	43	43	33	33	43	54
		550S162	16	33	33	33	33	33	33	33	33	33	33	33	33
			24	33	33	33	43	33	33	33	43	33	33	33	43
110 mph	90 mph	350S162	16	33	33	33	33	33	33	33	33	33	33	33	43
			24	33	33	43	54	33	33	33	43	43	43	43	54
		550S162	16	33	33	33	33	33	33	33	33	33	33	33	33
			24	33	33	33	43	33	33	33	43	33	33	33	43
—	100 mph	350S162	16	33	33	33	33	33	33	33	33	33	33	33	43
			24	33	33	33	54	43	43	43	43	43	43	43	54
		550S162	16	33	33	33	33	33	33	33	33	33	33	33	33
			24	33	33	33	43	33	33	33	43	33	33	33	43
—	110 mph	350S162	16	33	33	33	43	33	33	33	33	33	33	33	43
			24	33	33	43	54	43	43	43	54	54	54	54	54
		550S162	16	33	33	33	33	33	33	33	33	33	33	33	33
			24	33	33	33	43	33	33	33	43	33	33	33	43

For SI: 1 inch = 25.4 mm, 1 foot = 304.8 mm, 1 mil = 0.0254 mm, 1 mile per hour = 0.447 m/s, 1 pound per square foot = 0.0479kPa, 1 ksi = 1000 psi = 6.895 MPa.

a. Deflection criterion: *L*/240.

b. Design load assumptions: Second floor dead load is 10 psf. Second floor live load is 30 psf. Roof/ceiling dead load is 12 psf. Attic live load is 10 psf.

c. Building width is in the direction of horizontal framing members supported by the wall studs.

TABLE 603.3.2(10)
40-FOOT-WIDE BUILDING SUPPORTING ROOF AND CEILING ONLY[a,b,c]
33 ksi STEEL

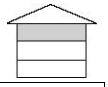

WIND SPEED		MEMBER SIZE	STUD SPACING (inches)	MINIMUM STUD THICKNESS (mils)											
				8-Foot Studs				9-Foot Studs				10-Foot Studs			
				Ground Snow Load (psf)											
Exp. B	Exp. C			20	30	50	70	20	30	50	70	20	30	50	70
85 mph	—	350S162	16	33	33	33	43	33	33	33	43	33	33	33	43
			24	33	33	43	54	33	33	43	54	43	43	54	68
		550S162	16	33	33	33	33	33	33	33	33	33	33	33	33
			24	33	33	43	54	33	33	43	43	33	33	43	54
90 mph	—	350S162	16	33	33	33	43	33	33	33	43	33	3	33	4
			24	33	33	43	54	33	33	43	54	43	43	54	68

		550S162	16	33	33	33	33	33	33	33	33	33	33	33	33
			24	33	33	43	54	33	33	43	43	33	33	43	54
100 mph	85 mph	350S162	16	33	33	33	43	33	33	33	43	33	33	33	43
			24	33	43	43	54	33	43	43	54	43	43	54	68
		550S162	16	33	33	33	43	33	33	33	33	33	33	33	33
			24	33	33	43	54	33	33	43	43	33	33	43	54
110 mph	90 mph	350S162	16	33	33	33	43	33	33	33	43	33	33	43	43
			24	33	43	43	54	43	43	43	54	43	43	54	68
		550S162	16	33	33	33	43	33	33	33	33	33	33	33	43
			24	33	33	43	54	33	33	43	43	33	33	43	54
—	100 mph	350S162	16	33	33	33	43	33	33	33	43	43	43	43	43
			24	43	43	54	68	43	43	54	54	54	54	54	68
		550S162	16	33	33	33	43	33	33	33	33	33	33	33	43
			24	33	33	43	54	33	33	43	54	33	33	43	54
—	110 mph	350S162	16	33	33	43	43	43	43	43	43	43	43	43	54
			24	43	43	54	68	54	54	54	68	68	68	68	68
		550S162	16	33	33	33	43	33	33	33	43	33	33	33	43
			24	33	33	43	54	33	33	43	54	43	43	43	54

For SI: 1 inch = 25.4 mm, 1 foot = 304.8 mm, 1 mil = 0.0254 mm, 1 mile per hour = 0.447 m/s, 1 pound per square foot = 0.0479 kPa, 1 ksi = 1000 psi = 6.895 MPa.

a. Deflection criterion: *L*/240.

b. Design load assumptions: Second floor dead load is 10 psf. Second floor live load is 30 psf. Roof/ceiling dead load is 12 psf. Attic live load is 10 psf.

c. Building width is in the direction of horizontal framing members supported by the wall studs.

TABLE 603.3.2(11)
40-FOOT-WIDE BUILDING SUPPORTING ROOF AND CEILING ONLY[a,b,c]
50 ksi STEEL

WIND SPEED		MEMBER SIZE	STUD SPACING (inches)	MINIMUM STUD THICKNESS (mils)											
				8-Foot Studs				9-Foot Studs				10-Foot Studs			
				Ground Snow Load (psf)											
Exp. B	Exp. C			20	30	50	70	20	30	50	70	20	30	50	70
85 mph	—	350S162	16	33	33	33	33	33	33	33	33	33	33	33	43
			24	33	33	43	54	33	33	43	43	33	33	43	54
		550S162	16	33	33	33	33	33	33	33	33	33	33	33	33
			24	33	33	33	43	33	33	33	43	33	33	33	43
90 mph	—	350S162	16	33	33	33	33	33	33	33	33	33	33	33	43
			24	33	33	43	54	33	33	43	43	33	33	43	54

		550S162	16	33	33	33	33	33	33	33	33	33	33	33	33
			24	33	33	33	43	33	33	33	43	33	33	33	43
100 mph	85 mph	350S162	16	33	33	33	43	33	33	33	33	33	33	33	43
			24	33	33	43	54	33	33	43	54	33	33	43	54
		550S162	16	33	33	33	33	33	33	33	33	33	33	33	33
			24	33	33	33	43	33	33	33	43	33	33	33	43
110 mph	90 mph	350S162	16	33	33	33	43	33	33	33	33	33	33	33	43
			24	33	33	43	54	33	33	43	54	43	43	43	54
		550S162	16	33	33	33	33	33	33	33	33	33	33	33	33
			24	33	33	33	43	33	33	33	43	33	33	33	43
—	100 mph	350S162	16	33	33	33	43	33	33	33	43	33	33	33	43
			24	33	33	43	54	43	43	43	54	43	43	54	54
		550S162	16	33	33	33	33	33	33	33	33	33	33	33	33
			24	33	33	43	43	33	33	33	43	33	33	43	43
—	110 mph	350S162	16	33	33	33	43	33	33	33	43	33	33	33	43
			24	33	33	43	54	43	43	43	54	54	54	54	68
		550S162	16	33	33	33	33	33	33	33	33	33	33	33	33
			24	33	33	43	43	33	33	33	43	33	33	43	43

For SI: 1 inch = 25.4 mm, 1 foot = 304.8 mm, 1 mil = 0.0254 mm, 1 mile per hour = 0.447 m/s, 1 pound per square foot = 0.0479kPa, 1 ksi = 1000 psi = 6.895 MPa.

a. Deflection criterion: *L*/240.

b. Design load assumptions: Second floor dead load is 10 psf. Second floor live load is 30 psf. Roof/ceiling dead load is 12 psf. Attic live load is 10 psf.

c. Building width is in the direction of horizontal framing members supported by the wall studs.

TABLE 603.3.2(12)
24-FOOT-WIDE BUILDING SUPPORTING ONE FLOOR, ROOF AND CEILING[a,b,c] 33 ksi STEEL

WIND SPEED		MEMBER SIZE	STUD SPACING (inches)	MINIMUM STUD THICKNESS (mils)											
				8-Foot Studs				9-Foot Studs				10-Foot Studs			
				Ground Snow Load (psf)											
Exp. B	Exp. C			20	30	50	70	20	30	50	70	20	30	50	70
85 mph	—	350S162	16	33	33	33	33	33	33	33	33	33	33	33	43
			24	33	33	43	43	33	43	43	43	43	43	43	54
		550S162	16	33	33	33	33	33	33	33	33	33	33	33	33
			24	33	33	33	43	33	33	33	43	33	33	33	43

90 mph	—	350S162	16	33	33	33	33	33	33	33	33	33	33	33	43
			24	33	33	43	43	33	43	43	43	43	43	43	54
		550S162	16	33	33	33	33	33	33	33	33	33	33	33	33
			24	33	33	33	43	33	33	33	43	33	33	33	43
100 mph	85 mph	350S162	16	33	33	33	33	33	33	33	33	33	33	33	43
			24	33	43	43	43	43	43	43	43	43	43	43	54
		550S162	16	33	33	33	33	33	33	33	33	33	33	33	33
			24	33	33	33	43	33	33	33	43	33	33	33	43
110 mph	90 mph	350S162	16	33	33	33	43	33	33	33	33	33	33	43	43
			24	43	43	43	43	43	43	43	43	54	54	54	54
		550S162	16	33	33	33	33	33	33	33	33	33	33	33	33
			24	33	33	33	43	33	33	33	43	43	43	43	43
—	100 mph	350S162	16	33	33	33	43	33	33	33	43	43	43	43	43
			24	43	43	43	54	43	43	54	54	54	54	54	54
		550S162	16	33	33	33	33	33	33	33	33	33	33	33	33
			24	33	33	33	43	43	43	43	43	43	43	43	43
—	110 mph	350S162	16	33	33	33	43	43	43	43	43	43	43	43	43
			24	43	43	43	54	54	54	54	54	68	68	68	68
		550S162	16	33	33	33	33	33	33	33	33	33	33	33	33
			24	43	43	43	43	43	43	43	43	43	43	43	43

For SI: 1 inch = 25.4 mm, 1 foot = 304.8 mm, 1 mil = 0.0254 mm, 1 mile per hour = 0.447 m/s, 1 pound per square foot = 0.0479kPa, 1 ksi = 1000 psi = 6.895 MPa.

a. Deflection criterion: *L*/240.

b. Design load assumptions: Second floor dead load is 10 psf. Second floor live load is 30 psf. Roof/ceiling dead load is 12 psf. Attic live load is 10 psf.

c. Building width is in the direction of horizontal framing members supported by the wall studs.

TABLE 603.3.2(13)
24-FOOT-WIDE BUILDING SUPPORTING ONE FLOOR, ROOF AND CEILING[a,b,c]
50 ksi STEEL

WIND SPEED		MEMBER SIZE	STUD SPACING (inches)	MINIMUM STUD THICKNESS (mils)											
				8-Foot Studs				9-Foot Studs				10-Foot Studs			
				Ground Snow Load (psf)											
Exp. B	Exp. C			20	30	50	70	20	30	50	70	20	30	50	70
85 mph	—	350S162	16	33	33	33	33	33	33	33	33	33	33	33	33
			24	33	33	33	43	33	33	33	43	33	33	43	43
		550S162	16	33	33	33	33	33	33	33	33	33	33	33	33
			24	33	33	33	33	33	33	33	33	33	33	33	33
90 mph	—	350S162	16	33	33	33	33	33	33	33	33	33	33	33	33
			24	33	33	33	43	33	33	33	43	33	33	43	43
		550S162	16	33	33	33	33	33	33	33	33	33	33	33	33
			24	33	33	33	33	33	33	33	33	33	33	33	33
100 mph	85 mph	350S162	16	33	33	33	33	33	33	33	33	33	33	33	33
			24	33	33	33	43	33	33	33	43	43	43	43	43
		550S162	16	33	33	33	33	33	33	33	33	33	33	33	33
			24	33	33	33	33	33	33	33	33	33	33	33	33
110 mph	90 mph	350S162	16	33	33	33	33	33	33	33	33	33	33	33	33
			24	33	33	43	43	33	33	43	43	43	43	43	43
		550S162	16	33	33	33	33	33	33	33	33	33	33	33	33
			24	33	33	33	33	33	33	33	33	33	33	33	33
—	100 mph	350S162	16	33	33	33	33	33	33	33	33	33	33	33	33
			24	33	33	43	43	43	43	43	43	43	43	43	54
		550S162	16	33	33	33	33	33	33	33	33	33	33	33	33
			24	33	33	33	43	33	33	33	33	33	33	33	43
—	110 mph	350S162	16	33	33	33	33	33	33	33	33	33	33	43	43
			24	43	43	43	43	43	43	43	43	54	54	54	54
		550S162	16	33	33	33	33	33	33	33	33	33	33	33	33
			24	33	33	33	43	33	33	33	33	33	33	33	43

For SI: 1 inch = 25.4 mm, 1 foot = 304.8 mm, 1 mil = 0.0254 mm, 1 mile per hour = 0.447 m/s, 1 pound per square foot = 0.0479 kPa, 1 ksi = 1000 psi = 6.895 MPa.

a. Deflection criterion: *L*/240.

b. Design load assumptions: Second floor dead load is 10 psf. Second floor live load is 30 psf. Roof/ceiling dead load is 12 psf. Attic live load is 10 psf.

c. Building width is in the direction of horizontal framing members supported by the wall studs.

TABLE 603.3.2(14)
28-FOOT-WIDE BUILDING SUPPORTING ONE FLOOR, ROOF AND CEILING[a,b,c]
33 ksi STEEL

WIND SPEED		MEMBER SIZE	STUD SPACING (inches)	MINIMUM STUD THICKNESS (mils)											
				8-Foot Studs				9-Foot Studs				10-Foot Studs			
				Ground Snow Load (psf)											
Exp. B	Exp. C			20	30	50	70	20	30	50	70	20	30	50	70
85 mph	—	350S162	16	33	33	33	43	33	33	33	43	33	33	33	43
			24	43	43	43	54	43	43	43	54	43	43	43	54
		550S162	16	33	33	33	33	33	33	33	33	33	33	33	33
			24	33	33	43	43	33	33	43	43	33	33	43	43
90 mph	—	350S162	16	33	33	33	43	33	33	33	43	33	33	33	43
			24	43	43	43	54	43	43	43	54	43	43	43	54
		550S162	16	33	33	33	33	33	33	33	33	33	33	33	33
			24	33	33	43	43	33	33	43	43	33	33	43	43
100 mph	85 mph	350S162	16	33	33	33	43	33	33	33	43	33	33	43	43
			24	43	43	43	54	43	43	43	54	43	43	54	54
		550S162	16	33	33	33	33	33	33	33	33	33	33	33	33
			24	33	33	43	43	33	33	43	43	33	33	43	43
110 mph	90 mph	350S162	16	33	33	33	43	33	33	33	43	43	43	43	43
			24	43	43	43	54	43	43	43	54	54	54	54	54
		550S162	16	33	33	33	33	33	33	33	33	33	33	33	33
			24	33	33	43	43	33	33	43	43	43	43	43	43
—	100 mph	350S162	16	33	33	33	43	33	33	43	43	43	43	43	43
			24	43	43	43	54	54	54	54	54	54	54	54	68
		550S162	16	33	33	33	33	33	33	33	33	33	33	33	33
			24	33	33	43	43	43	43	43	43	43	43	43	43
—	110 mph	350S162	16	33	33	43	43	43	43	43	43	43	43	43	54
			24	43	43	54	54	54	54	54	54	68	68	68	68
		550S162	16	33	33	33	33	33	33	33	33	33	33	33	33
			24	43	43	43	43	43	43	43	43	43	43	43	43

For SI: 1 inch = 25.4 mm, 1 foot = 304.8 mm, 1 mil = 0.0254 mm, 1 mile per hour = 0.447 m/s, 1 pound per square foot = 0.0479 kPa, 1 ksi = 1000 psi = 6.895 MPa.

a. Deflection criterion: *L*/240.

b. Design load assumptions: Second floor dead load is 10 psf. Second floor live load is 30 psf. Roof/ceiling dead load is 12 psf. Attic live load is 10 psf.

c. Building width is in the direction of horizontal framing members supported by the wall studs.

TABLE 603.3.2(15)
28-FOOT-WIDE BUILDING SUPPORTING ONE FLOOR, ROOF AND CEILING[a,b,c]
50 ksi STEEL

WIND SPEED		MEMBER SIZE	STUD SPACING (inches)	MINIMUM STUD THICKNESS (mils)											
				8-Foot Studs				9-Foot Studs				10-Foot Studs			
				Ground Snow Load (psf)											
Exp. B	Exp. C			20	30	50	70	20	30	50	70	20	30	50	70
85 mph	—	350S162	16	33	33	33	33	33	33	33	33	33	33	33	33
			24	33	33	43	43	33	33	43	43	43	43	43	54
		550S162	16	33	33	33	33	33	33	33	33	33	33	33	33
			24	33	33	33	43	33	33	33	43	33	33	33	43
90 mph	—	350S162	16	33	33	33	33	33	33	33	33	33	33	33	33
			24	33	33	43	43	33	33	43	43	43	43	43	54
		550S162	16	33	33	33	33	33	33	33	33	33	33	33	33
			24	33	33	33	43	33	33	33	43	33	33	33	43
100 mph	85 mph	350S162	16	33	33	33	33	33	33	33	33	33	33	33	43
			24	33	33	43	43	33	33	43	43	43	43	43	54
		550S162	16	33	33	33	33	33	33	33	33	33	33	33	33
			24	33	33	33	43	33	33	33	43	33	33	33	43
110 mph	90 mph	350S162	16	33	33	33	33	33	33	33	33	33	33	33	43
			24	33	33	43	43	43	43	43	43	43	43	43	54
		550S162	16	33	33	33	33	33	33	33	33	33	33	33	33
			24	33	33	33	43	33	33	33	43	33	33	33	43
—	100 mph	350S162	16	33	33	33	33	33	33	33	33	33	33	33	43
			24	43	43	43	54	43	43	43	43	43	43	54	54
		550S162	16	33	33	33	33	33	33	33	33	33	33	33	33
			24	33	33	33	43	33	33	33	43	33	33	33	43
—	110 mph	350S162	16	33	33	33	43	33	33	33	33	43	43	43	43
			24	43	43	43	54	43	43	43	43	54	54	54	54
		550S162	16	33	33	33	33	33	33	33	33	33	33	33	33
			24	33	33	33	43	33	33	33	43	33	33	33	43

For SI: 1 inch = 25.4 mm, 1 foot = 304.8 mm, 1 mil = 0.0254 mm, 1 mile per hour = 0.447 m/s, 1 pound per square foot = 0.0479kPa, 1 ksi = 1000 psi = 6.895 MPa.

a. Deflection criterion: *L*/240.

b. Design load assumptions: Second floor dead load is 10 psf. Second floor live load is 30 psf. Roof/ceiling dead load is 12 psf. Attic live load is 10 psf.

c. Building width is in the direction of horizontal framing members supported by the wall studs.

TABLE 603.3.2(16)
32-FOOT-WIDE BUILDING SUPPORTING ONE FLOOR, ROOF AND CEILING[a,b,c]
33 ksi STEEL

WIND SPEED		MEMBER SIZE	STUD SPACING (inches)	MINIMUM STUD THICKNESS (mils)											
				8-Foot Studs				9-Foot Studs				10-Foot Studs			
				Ground Snow Load (psf)											
Exp. B	Exp. C			20	30	50	70	20	30	50	70	20	30	50	70
85 mph	—	350S162	16	33	33	33	43	33	33	33	43	33	33	43	43
			24	43	43	43	54	43	43	43	54	43	43	54	54
		550S162	16	33	33	33	43	33	33	33	33	33	33	33	43
			24	33	43	43	54	33	33	43	43	33	33	43	43
90 mph	—	350S162	16	33	33	33	43	33	33	33	43	33	33	43	43
			24	43	43	43	54	43	43	43	54	43	43	54	54
		550S162	16	33	33	33	43	33	33	33	33	33	33	33	43
			24	33	43	43	54	33	33	43	43	33	33	43	43
100 mph	85 mph	350S162	16	33	33	33	43	33	33	33	43	33	43	43	43
			24	43	43	43	54	43	43	43	54	54	54	54	68
		550S162	16	33	33	33	43	33	33	33	33	33	33	33	43
			24	33	43	43	54	33	33	43	43	33	33	43	43
110 mph	90 mph	350S162	16	33	33	43	43	33	33	33	43	43	43	43	43
			24	43	43	54	54	43	43	54	54	54	54	54	68
		550S162	16	33	33	33	43	33	33	33	33	33	33	33	43
			24	33	43	43	54	33	33	43	43	43	43	43	54
—	100 mph	350S162	16	33	33	43	43	43	43	43	43	43	43	43	43
			24	43	43	54	54	54	54	54	54	54	54	54	54
		550S162	16	33	33	33	43	33	33	33	33	33	33	33	43
			24	33	43	43	54	43	43	43	43	43	43	43	54
—	110 mph	350S162	16	43	43	43	43	43	43	43	43	43	43	54	54
			24	54	54	54	68	54	54	54	68	68	68	68	68
		550S162	16	33	33	33	43	33	33	33	43	33	33	33	43
			24	43	43	43	54	43	43	43	43	43	43	43	54

For SI: 1 inch = 25.4 mm, 1 foot = 304.8 mm, 1 mil = 0.0254 mm, 1 mile per hour = 0.447 m/s, 1 pound per square foot = 0.0479kPa, 1 ksi = 1000 psi = 6.895 MPa.

a. Deflection criterion: *L*/240.

b. Design load assumptions: Second floor dead load is 10 psf. Second floor live load is 30 psf. Roof/ceiling dead load is 12 psf. Attic live load is 10 psf.

c. Building width is in the direction of horizontal framing members supported by the wall studs.

TABLE 603.3.2(17)
32-FOOT-WIDE BUILDING SUPPORTING ONE FLOOR, ROOF AND CEILING[a,b,c]
50 ksi STEEL

WIND SPEED		MEMBER SIZE	STUD SPACING (inches)	MINIMUM STUD THICKNESS (mils)											
				8-Foot Studs				9-Foot Studs				10-Foot Studs			
				Ground Snow Load (psf)											
Exp. B	Exp. C			20	30	50	70	20	30	50	70	20	30	50	70
85 mph	—	350S162	16	33	33	33	43	33	33	33	33	33	33	33	43
			24	33	33	43	54	33	33	43	43	43	43	43	54
		550S162	16	33	33	33	33	33	33	33	33	33	33	33	33
			24	33	33	43	43	33	33	33	43	33	33	33	43
90 mph	—	350S162	16	33	33	33	43	33	33	33	33	33	33	33	43
			24	33	33	43	54	33	33	43	43	43	43	43	54
		550S162	16	33	33	33	33	33	33	33	33	33	33	33	33
			24	33	33	43	43	33	33	33	43	33	33	33	43
100 mph	85 mph	350S162	16	33	33	33	43	33	33	33	33	33	33	33	43
			24	33	33	43	54	33	33	43	43	43	43	43	54
		550S162	16	33	33	33	33	33	33	33	33	33	33	33	33
			24	33	33	43	43	33	33	33	43	33	33	33	43
110 mph	90 mph	350S162	16	33	33	33	43	33	33	33	33	33	33	33	43
			24	43	43	43	54	43	43	43	54	43	43	54	54
		550S162	16	33	33	33	33	33	33	33	33	33	33	33	33
			24	33	33	43	43	33	33	33	43	33	33	33	43
—	100 mph	350S162	16	33	33	33	43	33	33	33	43	33	33	43	43
			24	43	43	43	54	43	43	43	54	54	54	54	54
		550S162	16	33	33	33	33	33	33	33	33	33	33	33	33
			24	33	33	43	43	33	33	33	43	33	33	43	43
—	110 mph	350S162	16	33	33	33	43	33	33	33	43	43	43	43	43
			24	43	43	43	54	43	43	43	54	54	54	54	54
		550S162	16	33	33	33	33	33	33	33	33	33	33	33	33
			24	33	33	43	43	33	33	33	43	33	33	43	43

For SI: 1 inch = 25.4 mm, 1 foot = 304.8 mm, 1 mil = 0.0254 mm, 1 mile per hour = 0.447 m/s, 1 pound per square foot = 0.0479 kPa, 1 ksi = 1000 psi = 6.895 MPa.

a. Deflection criterion: *L*/240.

b. Design load assumptions: Second floor dead load is 10 psf. Second floor live load is 30 psf. Roof/ceiling dead load is 12 psf. Attic live load is 10 psf.

c. Building width is in the direction of horizontal framing members supported by the wall studs.

TABLE 603.3.2(18)
36-FOOT-WIDE BUILDING SUPPORTING ONE FLOOR, ROOF AND CEILING[a,b,c]
33 ksi STEEL

WIND SPEED		MEMBER SIZE	STUD SPACING (inches)	MINIMUM STUD THICKNESS (mils)											
				8-Foot Studs				9-Foot Studs				10-Foot Studs			
				Ground Snow Load (psf)											
Exp. B	Exp. C			20	30	50	70	20	30	50	70	20	30	50	70
85 mph	—	350S162	16	33	33	43	43	33	33	43	43	33	33	43	43
			24	43	43	54	54	43	43	54	54	54	54	54	68
		550S162	16	33	33	33	43	33	33	33	43	33	33	33	43
			24	43	43	43	54	43	43	43	54	43	43	43	54
90 mph	—	350S162	16	33	33	43	43	33	33	43	43	33	33	43	43
			24	43	43	54	54	43	43	54	54	54	54	54	68
		550S162	16	33	33	33	43	33	33	33	43	33	33	33	43
			24	43	43	43	54	43	43	43	54	43	43	43	54
100 mph	85 mph	350S162	16	33	33	43	43	33	33	43	43	43	43	43	43
			24	43	43	54	68	43	43	54	54	54	54	54	68
		550S162	16	33	33	33	43	33	33	33	43	33	33	33	43
			24	43	43	43	54	43	43	43	54	43	43	43	54
110 mph	90 mph	350S162	16	33	33	43	43	33	33	43	43	43	43	43	54
			24	43	43	54	68	54	54	54	54	54	54	54	68
		550S162	16	33	33	33	43	33	33	33	43	33	33	33	43
			24	43	43	43	54	43	43	43	54	43	43	43	54
—	100 mph	350S162	16	33	33	43	43	43	43	43	43	43	43	43	54
			24	54	54	54	68	54	54	54	68	54	68	68	68
		550S162	16	33	33	33	43	33	33	33	43	33	33	33	43
			24	43	43	43	54	43	43	43	54	43	43	43	54
—	110 mph	350S162	16	43	43	43	43	43	43	43	43	43	54	54	54
			24	54	54	54	68	54	54	54	68	68	68	68	68
		550S162	16	33	33	33	43	33	33	33	43	33	33	33	43
			24	43	43	43	54	43	43	43	54	43	43	43	54

For SI: 1 inch = 25.4 mm, 1 foot = 304.8 mm, 1 mil = 0.0254 mm, 1 mile per hour = 0.447 m/s, 1 pound per square foot = 0.0479kPa, 1 ksi = 1000 psi = 6.895 MPa.

a. Deflection criterion: *L*/240.

b. Design load assumptions: Second floor dead load is 10 psf. Second floor live load is 30 psf. Roof/ceiling dead load is 12 psf. Attic live load is 10 psf.

c. Building width is in the direction of horizontal framing members supported by the wall studs.

TABLE 603.3.2(19)
36-FOOT-WIDE BUILDING SUPPORTING ONE FLOOR, ROOF AND CEILING[a,b,c]
50 ksi STEEL

WIND SPEED		MEMBER SIZE	STUD SPACING (inches)	MINIMUM STUD THICKNESS (mils)											
				8-Foot Studs				9-Foot Studs				10-Foot Studs			
				Ground Snow Load (psf)											
Exp. B	Exp. C			20	30	50	70	20	30	50	70	20	30	50	70
85 mph	—	350S162	16	33	33	33	43	33	33	33	43	33	33	33	43
			24	43	43	43	54	33	33	43	54	43	43	43	54
		550S162	16	33	33	33	33	33	33	33	33	33	33	33	33
			24	33	33	43	43	33	33	43	43	33	33	43	43
90 mph	—	350S162	16	33	33	33	43	33	33	33	43	33	33	33	43
			24	43	43	43	54	33	33	43	54	43	43	43	54
		550S162	16	33	33	33	33	33	33	33	33	33	33	33	33
			24	33	33	43	43	33	33	43	43	33	33	43	43
100 mph	85 mph	350S162	16	33	33	33	43	33	33	33	43	33	33	33	43
			24	43	43	43	54	43	43	43	54	43	43	54	54
		550S162	16	33	33	33	33	33	33	33	33	33	33	33	33
			24	33	33	43	43	33	33	43	43	33	33	43	43
110 mph	90 mph	350S162	16	33	33	33	43	33	33	33	43	33	33	43	43
			24	43	43	43	54	43	43	43	54	43	43	54	54
		550S162	16	33	33	33	33	33	33	33	33	33	33	33	33
			24	33	33	43	43	33	33	43	43	33	33	43	43
—	100 mph	350S162	16	33	33	33	43	33	33	33	43	43	43	43	43
			24	43	43	43	54	43	43	43	54	54	54	54	68
		550S162	16	33	33	33	33	33	33	33	33	33	33	33	33
			24	33	33	43	43	33	33	43	43	33	33	43	43
—	110 mph	350S162	16	33	33	43	43	33	33	33	43	43	43	43	43
			24	43	43	54	54	43	43	54	54	54	54	54	68
		550S162	16	33	33	33	33	33	33	33	33	33	33	33	33
			24	33	33	43	43	33	33	43	43	43	43	43	43

For SI: 1 inch = 25.4 mm, 1 foot = 304.8 mm, 1 mil = 0.0254 mm, 1 mile per hour = 0.447 m/s, 1 pound per square foot = 0.0479kPa, 1 ksi = 1000 psi = 6.895 MPa.

a. Deflection criterion: *L*/240.

b. Design load assumptions: Second floor dead load is 10 psf. Second floor live load is 30 psf. Roof/ceiling dead load is 12 psf. Attic live load is 10 psf.

c. Building width is in the direction of horizontal framing members supported by the wall studs.

TABLE 603.3.2(20)
40-FOOT-WIDE BUILDING SUPPORTING ONE FLOOR, ROOF AND CEILING[a,b,c]
33 ksi STEEL

WIND SPEED		MEMBER SIZE	STUD SPACING (inches)	MINIMUM STUD THICKNESS (mils)											
				8-Foot Studs				9-Foot Studs				10-Foot Studs			
				Ground Snow Load (psf)											
Exp. B	Exp. C			20	30	50	70	20	30	50	70	20	30	50	70
85 mph	—	350S162	16	33	33	43	43	33	33	43	43	43	43	43	54
			24	43	43	54	68	43	43	54	68	54	54	54	68
		550S162	16	33	33	33	43	33	33	33	43	33	33	33	43
			24	43	43	54	54	43	43	43	54	43	43	43	54
90 mph	—	350S162	16	33	33	43	43	33	33	43	43	43	43	43	54
			24	43	43	54	68	43	43	54	68	54	54	54	68
		550S162	16	33	33	33	43	33	33	33	43	33	33	33	43
			24	43	43	54	54	43	43	43	54	43	43	43	54
100 mph	85 mph	350S162	16	33	33	43	43	33	33	43	43	43	43	43	54
			24	43	43	54	68	43	43	54	68	54	54	54	68
		550S162	16	33	33	33	43	33	33	33	43	33	33	33	43
			24	43	43	54	54	43	43	43	54	43	43	43	54
110 mph	90 mph	350S162	16	33	33	43	43	43	43	43	43	43	43	43	54
			24	43	43	54	68	54	54	54	68	54	54	68	68
		550S162	16	33	33	43	43	33	33	33	43	33	33	33	43
			24	43	43	54	54	43	43	43	54	43	43	43	54
—	100 mph	350S162	16	43	43	43	54	43	43	43	54	43	43	54	54
			24	54	54	54	68	54	54	54	68	68	68	68	97
		550S162	16	33	33	43	43	33	33	33	43	33	33	43	43
			24	43	43	54	54	43	43	43	54	43	43	54	54
—	110 mph	350S162	16	43	43	43	54	43	43	43	54	54	54	54	54
			24	54	54	54	68	54	54	68	68	68	68	68	97
		550S162	16	33	33	43	43	33	33	33	43	33	33	43	43
			24	43	43	54	54	43	43	43	54	43	43	54	54

For SI: 1 inch = 25.4 mm, 1 foot = 304.8 mm, 1 mil = 0.0254 mm, 1 mile per hour = 0.447 m/s, 1 pound per square foot = 0.0479kPa, 1 ksi = 1000 psi = 6.895 MPa.

a. Deflection criterion: *L*/240.

b. Design load assumptions: Second floor dead load is 10 psf. Second floor live load is 30 psf. Roof/ceiling dead load is 12 psf. Attic live load is 10 psf.

c. Building width is in the direction of horizontal framing members supported by the wall studs.

TABLE 603.3.2(21)
40-FOOT-WIDE BUILDING SUPPORTING ONE FLOOR, ROOF AND CEILING[a,b,c]
50 ksi STEEL

WIND SPEED		MEMBER SIZE	STUD SPACING (inches)	MINIMUM STUD THICKNESS (mils)											
				8-Foot Studs				9-Foot Studs				10-Foot Studs			
				Ground Snow Load (psf)											
Exp. B	Exp. C			20	30	50	70	20	30	50	70	20	30	50	70
85 mph	—	350S162	16	33	33	33	43	33	33	33	43	33	33	43	43
			24	43	43	43	54	43	43	43	54	43	43	54	54
		550S162	16	33	33	33	43	33	33	33	33	33	33	33	33
			24	33	43	43	54	33	33	43	43	33	33	43	43
90 mph	—	350S162	16	33	33	33	43	33	33	33	43	33	33	43	43
			24	43	43	43	54	43	43	43	54	43	43	54	54
		550S162	16	33	33	33	43	33	33	33	33	33	33	33	33
			24	33	43	43	54	33	33	43	43	33	33	43	43
100 mph	85 mph	350S162	16	33	33	33	43	33	33	33	43	33	33	43	43
			24	43	43	54	54	43	43	43	54	43	43	54	68
		550S162	16	33	33	33	43	33	33	33	33	33	33	33	33
			24	33	43	43	54	33	33	43	43	33	33	43	43
110 mph	90 mph	350S162	16	33	33	43	43	33	33	33	43	33	33	43	43
			24	43	43	54	54	43	43	43	54	54	54	54	68
		550S162	16	33	33	33	43	33	33	33	33	33	33	33	43
			24	33	43	43	54	33	33	43	43	33	33	43	43
—	100 mph	350S162	16	33	33	43	43	33	33	33	43	43	43	43	43
			24	43	43	54	54	43	43	54	54	54	54	54	68
		550S162	16	33	33	33	43	33	33	33	33	33	33	33	43
			24	33	43	43	54	33	33	43	43	33	43	43	43
—	110 mph	350S162	16	33	33	43	43	33	33	43	43	43	43	43	54
			24	43	43	54	68	54	54	54	54	54	54	54	68
		550S162	16	33	33	33	43	33	33	33	33	33	33	33	43
			24	33	43	43	54	33	33	43	43	43	43	43	54

For SI: 1 inch = 25.4 mm, 1 foot = 304.8 mm, 1 mil = 0.0254 mm, 1 mile per hour = 0.447 m/s, 1 pound per square foot = 0.0479 kPa, 1 ksi = 1000 psi = 6.895 MPa.

a. Deflection criterion: *L*/240.

b. Design load assumptions: Second floor dead load is 10 psf. Second floor live load is 30 psf. Roof/ceiling dead load is 12 psf. Attic live load is 10 psf.

c. Building width is in the direction of horizontal framing members supported by the wall studs.

TABLE 603.3.2(22)
24-FOOT-WIDE BUILDING SUPPORTING TWO FLOORS, ROOF AND CEILING[a,b,c]
33 ksi STEEL

WIND SPEED		MEMBER SIZE	STUD SPACING (inches)	MINIMUM STUD THICKNESS (mils)											
				8-Foot Studs				9-Foot Studs				10-Foot Studs			
				Ground Snow Load (psf)											
Exp. B	Exp. C			20	30	50	70	20	30	50	70	20	30	50	70
85 mph	—	350S162	16	43	43	43	43	33	33	33	43	43	43	43	43
			24	54	54	54	54	43	43	54	54	54	54	54	54
		550S162	16	33	33	43	43	33	33	33	33	33	33	33	43
			24	43	43	54	54	43	43	43	43	43	43	43	54
90 mph	—	350S162	16	43	43	43	43	33	33	33	43	43	43	43	43
			24	54	54	54	54	43	54	54	54	54	54	54	54
		550S162	16	33	33	43	43	33	33	33	33	33	33	33	43
			24	43	43	54	54	43	43	43	43	43	43	43	54
100 mph	85 mph	350S162	16	43	43	43	43	33	33	33	43	43	43	43	43
			24	54	54	54	54	54	54	54	54	54	54	54	68
		550S162	16	33	33	43	43	33	33	33	33	33	33	33	43
			24	43	43	54	54	43	43	43	43	43	43	43	54
110 mph	90 mph	350S162	16	43	43	43	43	43	43	43	43	43	43	43	43
			24	54	54	54	54	54	54	54	54	54	54	68	68
		550S162	16	33	33	43	43	33	33	33	33	33	33	33	43
			24	43	43	54	54	43	43	43	43	43	43	43	54
—	100 mph	350S162	16	33	43	43	43	43	43	43	43	43	43	43	54
			24	54	54	54	54	54	54	54	54	68	68	68	68
		550S162	16	33	33	43	43	33	33	33	33	33	33	33	43
			24	43	43	54	54	43	43	43	43	43	43	43	54
—	110 mph	350S162	16	43	43	43	43	43	43	43	43	54	54	54	54
			24	54	54	54	68	54	54	68	68	68	68	68	97
		550S162	16	33	33	43	43	33	33	33	33	33	33	33	43
			24	43	43	54	54	43	43	43	43	43	43	43	54

For SI: 1 inch = 25.4 mm, 1 foot = 304.8 mm, 1 mil = 0.0254 mm, 1 mile per hour = 0.447 m/s, 1 pound per square foot = 0.0479kPa, 1 ksi = 1000 psi = 6.895 MPa.

a. Deflection criterion: *L*/240.

b. Design load assumptions: Top and middle floor dead load is 10 psf. Top floor live load is 30 psf. Middle floor live load is 40 psf. Roof/ceiling dead load is 12 psf. Attic live load is 10 psf.

c. Building width is in the direction of horizontal framing members supported by the wall studs.

TABLE 603.3.2(23)
24-FOOT-WIDE BUILDING SUPPORTING TWO FLOORS, ROOF AND CEILING[a,b,c]
50 ksi STEEL

WIND SPEED		MEMBER SIZE	STUD SPACING (inches)	MINIMUM STUD THICKNESS (mils)											
				8-Foot Studs				9-Foot Studs				10-Foot Studs			
				Ground Snow Load (psf)											
Exp. B	Exp. C			20	30	50	70	20	30	50	70	20	30	50	70
85 mph	—	350S162	16	33	33	33	43	33	33	33	33	33	33	33	33
			24	43	43	54	54	43	43	43	43	43	43	43	54
		550S162	16	33	33	33	33	33	33	33	33	33	33	33	33
			24	43	43	43	43	43	43	43	43	43	43	43	43
90 mph	—	350S162	16	33	33	33	43	33	33	33	33	33	33	33	33
			24	43	43	54	54	43	43	43	43	43	43	43	54
		550S162	16	33	33	33	33	33	33	33	33	33	33	33	33
			24	43	43	43	43	43	43	43	43	43	43	43	43
100 mph	85 mph	350S162	16	33	33	33	43	33	33	33	33	33	33	33	33
			24	43	43	54	54	43	43	43	43	43	43	54	54
		550S162	16	33	33	33	33	33	33	33	33	33	33	33	33
			24	43	43	43	43	43	43	43	43	43	43	43	43
110 mph	90 mph	350S162	16	33	33	33	43	33	33	33	33	33	33	43	43
			24	43	43	54	54	43	43	43	43	54	54	54	54
		550S162	16	33	33	33	33	33	33	33	33	33	33	33	33
			24	43	43	43	43	43	43	43	43	43	43	43	43
—	100 mph	350S162	16	33	33	33	43	33	33	33	33	43	43	43	43
			24	43	43	54	54	43	43	54	54	54	54	54	54
		550S162	16	33	33	33	33	33	33	33	33	33	33	33	33
			24	43	43	43	43	43	43	43	43	43	43	43	43
—	110 mph	350S162	16	33	33	33	43	33	33	33	43	43	43	43	43
			24	54	54	54	54	54	54	54	54	54	54	54	68
		550S162	16	33	33	33	33	33	33	33	33	33	33	33	33
			24	43	43	43	43	43	43	43	43	43	43	43	43

For SI: 1 inch = 25.4 mm, 1 foot = 304.8 mm, 1 mil = 0.0254 mm, 1 mile per hour = 0.447 m/s, 1 pound per square foot = 0.0479kPa, 1 ksi = 1000 psi = 6.895 MPa.

a. Deflection criterion: *L*/240.

b. Design load assumptions: Top and middle floor dead load is 10 psf. Top floor live load is 30 psf. Middle floor live load is 40 psf. Attic live load is 10 psf.

c. Building width is in the direction of horizontal framing members supported by the wall studs.

TABLE 603.3.2(24)
28-FOOT-WIDE BUILDING SUPPORTING TWO FLOORS, ROOF AND CEILING[a,b,c] 33 ksi STEEL

WIND SPEED		MEMBER SIZE	STUD SPACING (inches)	MINIMUM STUD THICKNESS (mils)											
				8-Foot Studs				9-Foot Studs				10-Foot Studs			
				Ground Snow Load (psf)											
Exp. B	Exp. C			20	30	50	70	20	30	50	70	20	30	50	70
85 mph	—	350S162	16	43	43	43	43	43	43	43	43	43	43	43	43
			24	54	54	54	68	54	54	54	54	54	54	54	68
		550S162	16	43	43	43	43	43	43	43	43	43	43	43	43
			24	54	54	54	54	54	54	54	54	54	54	54	54
90 mph	—	350S162	16	43	43	43	43	43	43	43	43	43	43	43	43
			24	54	54	54	68	54	54	54	54	54	54	54	68
		550S162	16	43	43	43	43	43	43	43	43	43	43	43	43
			24	54	54	54	54	54	54	54	54	54	54	54	54
100 mph	85 mph	350S162	16	43	43	43	43	43	43	43	43	43	43	43	43
			24	54	54	54	68	54	54	54	54	54	54	68	68
		550S162	16	43	43	43	43	43	43	43	43	43	43	43	43
			24	54	54	54	54	54	54	54	54	54	54	54	54
110 mph	90 mph	350S162	16	43	43	43	43	43	43	43	43	43	43	43	43
			24	54	54	54	68	54	54	54	54	68	68	68	68
		550S162	16	43	43	43	43	43	43	43	43	43	43	43	43
			24	54	54	54	54	54	54	54	54	54	54	54	54
—	100 mph	350S162	16	43	43	43	43	43	43	43	43	43	43	54	54
			24	54	54	54	68	54	54	68	68	68	68	68	97
		550S162	16	43	43	43	43	43	43	43	43	43	43	43	43
			24	54	54	54	54	54	54	54	54	54	54	54	54
—	110 mph	350S162	16	43	43	43	43	43	43	43	43	54	54	54	54
			24	54	68	68	68	68	68	68	68	68	68	97	97
		550S162	16	43	43	43	43	43	43	43	43	43	43	43	43
			24	54	54	54	54	54	54	54	54	54	54	54	54

For SI: 1 inch = 25.4 mm, 1 foot = 304.8 mm, 1 mil = 0.0254 mm, 1 mile per hour = 0.447 m/s, 1 pound per square foot = 0.0479kPa, 1 ksi = 1000 psi = 6.895 MPa.

a. Deflection criterion: *L*/240.

b. Design load assumptions: Top and middle floor dead load is 10 psf. Top floor live load is 30 psf. Middle floor live load is 40 psf. Roof/ceiling dead load is 12 psf. Attic live load is 10 psf.

c. Building width is in the direction of horizontal framing members supported by the wall studs.

TABLE 603.3.2(25)
28-FOOT-WIDE BUILDING SUPPORTING TWO FLOORS, ROOF AND CEILING[a,b,c] 50 ksi STEEL

WIND SPEED		MEMBER SIZE	STUD SPACING (inches)	MINIMUM STUD THICKNESS (mils)											
				8-Foot Studs				9-Foot Studs				10-Foot Studs			
				Ground Snow Load (psf)											
Exp. B	Exp. C			20	30	50	70	20	30	50	70	20	30	50	70
85 mph	—	350S162	16	43	43	43	43	33	33	33	43	43	43	43	43
			24	54	54	54	54	43	43	54	54	54	54	54	54
		550S162	16	33	33	33	43	33	33	33	33	33	33	33	33
			24	43	43	43	54	43	43	43	43	43	43	43	43
90 mph	—	350S162	16	43	43	43	43	33	33	33	43	43	43	43	43
			24	54	54	54	54	43	43	54	54	54	54	54	54
		550S162	16	33	33	33	43	33	33	33	33	33	33	33	33
			24	43	43	43	54	43	43	43	43	43	43	43	43
100 mph	85 mph	350S162	16	43	43	43	43	33	33	33	43	43	43	43	43
			24	54	54	54	54	43	43	54	54	54	54	54	54
		550S162	16	33	33	33	43	33	33	33	33	33	33	33	33
			24	43	43	43	54	43	43	43	43	43	43	43	43
110 mph	90 mph	350S162	16	43	43	43	43	33	33	33	43	43	43	43	43
			24	54	54	54	54	43	43	54	54	54	54	54	54
		550S162	16	33	33	33	43	33	33	33	33	33	33	33	33
			24	43	43	43	54	43	43	43	43	43	43	43	43
—	100 mph	350S162	16	43	43	43	43	33	33	33	43	43	43	43	43
			24	54	54	54	54	54	54	54	54	54	54	54	68
		550S162	16	33	33	33	43	33	33	33	33	33	33	33	33
			24	43	43	43	54	43	43	43	43	43	43	43	43
—	110 mph	350S162	16	43	43	43	43	43	43	43	43	43	43	43	43
			24	54	54	54	54	54	54	54	54	68	68	68	68
		550S162	16	33	33	33	43	33	33	33	33	33	33	33	33
			24	43	43	43	54	43	43	43	43	43	43	43	43

For SI: 1 inch = 25.4 mm, 1 foot = 304.8 mm, 1 mil = 0.0254 mm, 1 mile per hour = 0.447 m/s, 1 pound per square foot = 0.0479kPa, 1 ksi = 1000 psi = 6.895 MPa.

a. Deflection criterion: *L*/240.

b. Design load assumptions: Top and middle floor dead load is 10 psf. Top floor live load is 30 psf. Middle floor live load is 40 psf. Roof/ceiling dead load is 12 psf. Attic live load is 10 psf.

c. Building width is in the direction of horizontal framing members supported by the wall studs.

TABLE 603.3.2(26)
32-FOOT-WIDE BUILDING SUPPORTING TWO FLOORS, ROOF AND CEILING[a,b,c] 33 ksi STEEL

WIND SPEED		MEMBER SIZE	STUD SPACING (inches)	MINIMUM STUD THICKNESS (mils)											
				8-Foot Studs				9-Foot Studs				10-Foot Studs			
				Ground Snow Load (psf)											
Exp. B	Exp. C			20	30	50	70	20	30	50	70	20	30	50	70
85 mph	—	350S162	16	43	43	43	54	43	43	43	43	43	43	43	54
			24	68	68	68	68	54	54	68	68	68	68	68	68
		550S162	16	43	43	43	43	43	43	43	43	43	43	43	43
			24	54	54	54	68	54	54	54	54	54	54	54	54
90 mph	—	350S162	16	43	43	43	54	43	43	43	43	43	43	43	54
			24	68	68	68	68	54	54	68	68	68	68	68	68
		550S162	16	43	43	43	43	43	43	43	43	43	43	43	43
			24	54	54	54	68	54	54	54	54	54	54	54	54
100 mph	85 mph	350S162	16	43	43	43	54	43	43	43	43	43	43	43	54
			24	68	68	68	68	54	54	68	68	68	68	68	68
		550S162	16	43	43	43	43	43	43	43	43	43	43	43	43
			24	54	54	54	68	54	54	54	54	54	54	54	54
110 mph	90 mph	350S162	16	43	43	43	54	43	43	43	43	43	43	54	54
			24	68	68	68	68	54	54	68	68	68	68	68	68
		550S162	16	43	43	43	43	43	43	43	43	43	43	43	43
			24	54	54	54	68	54	54	54	54	54	54	54	54
—	100 mph	350S162	16	43	43	43	54	43	43	43	43	54	54	54	54
			24	68	68	68	68	68	68	68	68	68	68	97	97
		550S162	16	43	43	43	43	43	43	43	43	43	43	43	43
			24	54	54	54	68	54	54	54	54	54	54	54	54
—	110 mph	350S162	16	43	43	43	54	43	43	54	54	54	54	54	54
			24	68	68	68	68	68	68	68	68	97	97	97	97
		550S162	16	43	43	43	43	43	43	43	43	43	43	43	43
			24	54	54	54	68	54	54	54	54	54	54	54	54

For SI: 1 inch = 25.4 mm, 1 foot = 304.8 mm, 1 mil = 0.0254 mm, 1 mile per hour = 0.447 m/s, 1 pound per square foot = 0.0479kPa, 1 ksi = 1000 psi = 6.895 MPa.

a. Deflection criterion: *L*/240.

b. Design load assumptions: Top and middle floor dead load is 10 psf. Top floor live load is 30 psf. Middle floor live load is 40 psf. Roof/ceiling dead load is 12 psf. Attic live load is 10 psf.

c. Building width is in the direction of horizontal framing members supported by the wall studs.

TABLE 603.3.2(27)
32-FOOT-WIDE BUILDING SUPPORTING TWO FLOORS, ROOF AND CEILING[a,b,c] 50 ksi STEEL

WIND SPEED		MEMBER SIZE	STUD SPACING (inches)	MINIMUM STUD THICKNESS (mils)											
				8-Foot Studs				9-Foot Studs				10-Foot Studs			
				Ground Snow Load (psf)											
Exp. B	Exp. C			20	30	50	70	20	30	50	70	20	30	50	70
85 mph	—	350S162	16	43	43	43	43	43	43	43	43	43	43	43	43
			24	54	54	54	68	54	54	54	54	54	54	54	68
		550S162	16	43	43	43	43	33	33	33	43	33	33	43	43
			24	54	54	54	54	43	43	43	54	43	43	54	54
90 mph	—	350S162	16	43	43	43	43	43	43	43	43	43	43	43	43
			24	54	54	54	68	54	54	54	54	54	54	54	68
		550S162	16	43	43	43	43	33	33	33	43	33	33	43	43
			24	54	54	54	54	43	43	43	54	43	43	54	54
100 mph	85 mph	350S162	16	43	43	43	43	43	43	43	43	43	43	43	43
			24	54	54	54	68	54	54	54	54	54	54	54	68
		550S162	16	43	43	43	43	33	33	33	43	33	33	43	43
			24	54	54	54	54	43	43	43	54	43	43	54	54
110 mph	90 mph	350S162	16	43	43	43	43	43	43	43	43	43	43	43	43
			24	54	54	54	68	54	54	54	54	54	54	54	68
		550S162	16	43	43	43	43	33	33	33	43	33	33	43	43
			24	54	54	54	54	43	43	43	54	43	43	54	54
—	100 mph	350S162	16	43	43	43	43	43	43	43	43	43	43	43	43
			24	54	54	54	68	54	54	54	54	68	68	68	68
		550S162	16	43	43	43	43	33	33	33	43	33	33	43	43
			24	54	54	54	54	43	43	43	54	43	43	54	54
—	110 mph	350S162	16	43	43	43	43	43	43	43	43	43	43	43	54
			24	54	54	54	68	54	54	54	54	68	68	68	68
		550S162	16	43	43	43	43	33	33	33	43	33	33	43	43
			24	54	54	54	54	43	43	43	54	43	43	54	54

For SI: 1 inch = 25.4 mm, 1 foot = 304.8 mm, 1 mil = 0.0254 mm, 1 mile per hour = 0.447 m/s, 1 pound per square foot = 0.0479 kPa, 1 ksi = 1000 psi = 6.895 MPa.

a. Deflection criterion: *L*/240.

b. Design load assumptions: Top and middle floor dead load is 10 psf. Top floor live load is 30 psf. Middle floor live load is 40 psf. Roof/ceiling dead load is 12 psf. Attic live load is 10 psf.

c. Building width is in the direction of horizontal framing members supported by the wall studs.

TABLE 603.3.2(28)
36-FOOT-WIDE BUILDING SUPPORTING TWO FLOORS, ROOF AND CEILING[a,b,c] 33 ksi STEEL

WIND SPEED		MEMBER SIZE	STUD SPACING (inches)	MINIMUM STUD THICKNESS (mils)											
				8-Foot Studs				9-Foot Studs				10-Foot Studs			
				Ground Snow Load (psf)											
Exp. B	Exp. C			20	30	50	70	20	30	50	70	20	30	50	70
85 mph	—	350S162	16	54	54	54	54	43	43	43	54	54	54	54	54
			24	68	68	68	97	68	68	68	68	68	68	68	97
		550S162	16	43	43	43	54	43	43	43	43	43	43	43	43
			24	68	68	68	68	54	54	54	68	54	54	68	68
90 mph	—	350S162	16	54	54	54	54	43	43	43	54	54	54	54	54
			24	68	68	68	97	68	68	68	68	68	68	68	97
		550S162	16	43	43	43	54	43	43	43	43	43	43	43	43
			24	68	68	68	68	54	54	54	68	54	54	68	68
100 mph	85 mph	350S162	16	54	54	54	54	43	43	43	54	54	54	54	54
			24	68	68	68	97	68	68	68	68	68	68	68	97
		550S162	16	43	43	43	54	43	43	43	43	43	43	43	43
			24	68	68	68	68	54	54	54	68	54	54	68	68
110 mph	90 mph	350S162	16	54	54	54	54	43	43	43	54	54	54	54	54
			24	68	68	68	97	68	68	68	68	68	68	97	97
		550S162	16	43	43	43	54	43	43	43	43	43	43	43	43
			24	68	68	68	68	54	54	54	68	54	54	68	68
—	100 mph	350S162	16	54	54	54	54	43	43	54	54	54	54	54	54
			24	68	68	68	97	68	68	68	68	97	97	97	97
		550S162	16	43	43	43	54	43	43	43	43	43	43	43	43
			24	68	68	68	68	54	54	54	68	54	54	68	68
—	110 mph	350S162	16	54	54	54	54	54	54	54	54	54	54	54	68
			24	68	68	68	97	68	68	68	97	97	97	97	97
		550S162	16	43	43	43	54	43	43	43	43	43	43	43	43
			24	68	68	68	68	54	54	54	68	54	54	68	68

For SI: 1 inch = 25.4 mm, 1 foot = 304.8 mm, 1 mil = 0.0254 mm, 1 mile per hour = 0.447 m/s, 1 pound per square foot = 0.0479 kPa, 1 ksi = 1000 psi = 6.895 MPa.

a. Deflection criterion: *L*/240.

b. Design load assumptions: Top and middle floor dead load is 10 psf. Top floor live load is 30 psf. Middle floor live load is 40 psf. Roof/ceiling dead load is 12 psf. Attic live load is 10 psf.

c. Building width is in the direction of horizontal framing members supported by the wall studs.

TABLE 603.3.2(29)
36-FOOT-WIDE BUILDING SUPPORTING TWO FLOORS, ROOF AND CEILING[a,b,c] 50 ksi STEEL

WIND SPEED		MEMBER SIZE	STUD SPACING (inches)	MINIMUM STUD THICKNESS (mils)											
				8-Foot Studs				9-Foot Studs				10-Foot Studs			
				Ground Snow Load (psf)											
Exp. B	Exp. C			20	30	50	70	20	30	50	70	20	30	50	70
85 mph	—	350S162	16	43	43	43	54	43	43	43	43	43	43	43	43
			24	68	68	68	68	54	54	54	68	68	68	68	68
		550S162	16	43	43	43	43	43	43	43	43	43	43	43	43
			24	54	54	54	54	54	54	54	54	54	54	54	54
90 mph	—	350S162	16	43	43	43	54	43	43	43	43	43	43	43	43
			24	68	68	68	68	54	54	54	68	68	68	68	68
		550S162	16	43	43	43	43	43	43	43	43	43	43	43	43
			24	54	54	54	54	54	54	54	54	54	54	54	54
100 mph	85 mph	350S162	16	43	43	43	54	43	43	43	43	43	43	43	43
			24	68	68	68	68	54	54	54	68	68	68	68	68
		550S162	16	43	43	43	43	43	43	43	43	43	43	43	43
			24	54	54	54	54	54	54	54	54	54	54	54	54
110 mph	90 mph	350S162	16	43	43	43	54	43	43	43	43	43	43	43	43
			24	68	68	68	68	54	54	54	68	68	68	68	68
		550S162	16	43	43	43	43	43	43	43	43	43	43	43	43
			24	54	54	54	54	54	54	54	54	54	54	54	54
—	100 mph	350S162	16	43	43	43	54	43	43	43	43	43	43	43	54
			24	68	68	68	68	54	54	54	68	68	68	68	68
		550S162	16	43	43	43	43	43	43	43	43	43	43	43	43
			24	54	54	54	54	54	54	54	54	54	54	54	54
—	110 mph	350S162	16	43	43	43	54	43	43	43	43	43	54	54	54
			24	68	68	68	68	54	54	68	68	68	68	68	68
		550S162	16	43	43	43	43	43	43	43	43	43	43	43	43
			24	54	54	54	54	54	54	54	54	54	54	54	54

For SI: 1 inch = 25.4 mm, 1 foot = 304.8 mm, 1 mil = 0.0254 mm, 1 mile per hour = 0.447 m/s, 1 pound per square foot = 0.0479kPa, 1 ksi = 1000 psi = 6.895 MPa.

a. Deflection criterion: *L*/240.

b. Design load assumptions: Top and middle floor dead load is 10 psf. Top floor live load is 30 psf. Middle floor live load is 40 psf. Roof/ceiling dead load is 12 psf. Attic live load is 10 psf.

c. Building width is in the direction of horizontal framing members supported by the wall studs.

TABLE 603.3.2(30)
40-FOOT-WIDE BUILDING SUPPORTING TWO FLOORS, ROOF AND CEILING[a,b,c] 33 ksi STEEL

WIND SPEED		MEMBER SIZE	STUD SPACING (inches)	MINIMUM STUD THICKNESS (mils)											
				8-Foot Studs				9-Foot Studs				10-Foot Studs			
				Ground Snow Load (psf)											
Exp. B	Exp. C			20	30	50	70	20	30	50	70	20	30	50	70
85 mph	—	350S162	16	54	54	54	54	54	54	54	54	54	54	54	54
			24	97	97	97	97	68	68	68	97	97	97	97	97
		550S162	16	54	54	54	54	43	43	54	54	43	43	54	54
			24	68	68	68	68	68	68	68	68	68	68	68	68
90 mph	—	350S162	16	54	54	54	54	54	54	54	54	54	54	54	54
			24	97	97	97	97	68	68	68	97	97	97	97	97
		550S162	16	54	54	54	54	43	43	54	54	43	43	54	54
			24	68	68	68	68	68	68	68	68	68	68	68	68
100 mph	85 mph	350S162	16	54	54	54	54	54	54	54	54	54	54	54	54
			24	97	97	97	97	68	68	68	97	97	97	97	97
		550S162	16	54	54	54	54	43	43	54	54	43	43	54	54
			24	68	68	68	68	68	68	68	68	68	68	68	68
110 mph	90 mph	350S162	16	54	54	54	54	54	54	54	54	54	54	54	54
			24	97	97	97	97	68	68	68	97	97	97	97	97
		550S162	16	54	54	54	54	43	43	54	54	43	43	54	54
			24	68	68	68	68	68	68	68	68	68	68	68	68
—	100 mph	350S162	16	54	54	54	54	54	54	54	54	54	54	54	54
			24	97	97	97	97	68	68	68	97	97	97	97	97
		550S162	16	54	54	54	54	43	43	54	54	43	43	54	54
			24	68	68	68	68	68	68	68	68	68	68	68	68
—	110 mph	350S162	16	54	54	54	54	54	54	54	54	54	54	68	68
			24	97	97	97	97	68	68	97	97	97	97	97	97
		550S162	16	54	54	54	54	43	43	54	54	43	43	54	54
			24	68	68	68	68	68	68	68	68	68	68	68	68

For SI: 1 inch = 25.4 mm, 1 foot = 304.8 mm, 1 mil = 0.0254 mm, 1 mile per hour = 0.447 m/s, 1 pound per square foot = 0.0479kPa, 1 ksi = 1000 psi = 6.895 MPa.

a. Deflection criterion: *L*/240.

b. Design load assumptions: Top and middle floor dead load is 10 psf. Top floor live load is 30 psf. Middle floor live load is 40 psf. Roof/ceiling dead load is 12 psf. Attic live load is 10 psf.

c. Building width is in the direction of horizontal framing members supported by the wall studs.

TABLE 603.3.2(31)
40-FOOT-WIDE BUILDING SUPPORTING TWO FLOORS, ROOF AND CEILING[a,b,c] 50 ksi STEEL

WIND SPEED		MEMBER SIZE	STUD SPACING (inches)	MINIMUM STUD THICKNESS (mils)											
				8-Foot Studs				9-Foot Studs				10-Foot Studs			
				Ground Snow Load (psf)											
Exp. B	Exp. C			20	30	50	70	20	30	50	70	20	30	50	70
85 mph	—	350S162	16	54	54	54	54	43	43	43	43	43	54	54	54
			24	68	68	68	68	68	68	68	68	68	68	68	68
		550S162	16	43	43	43	43	43	43	43	43	43	43	43	43
			24	54	54	54	68	54	54	54	54	54	54	54	54
90 mph	—	350S162	16	54	54	54	54	43	43	43	43	43	54	54	54
			24	68	68	68	68	68	68	68	68	68	68	68	68
		550S162	16	43	43	43	43	43	43	43	43	43	43	43	43
			24	54	54	54	68	54	54	54	54	54	54	54	54
100 mph	85 mph	350S162	16	54	54	54	54	43	43	43	43	43	54	54	54
			24	68	68	68	68	68	68	68	68	68	68	68	68
		550S162	16	43	43	43	43	43	43	43	43	43	43	43	43
			24	54	54	54	68	54	54	54	54	54	54	54	54
110 mph	90 mph	350S162	16	54	54	54	54	43	43	43	43	43	54	54	54
			24	68	68	68	68	68	68	68	68	68	68	68	68
		550S162	16	43	43	43	43	43	43	43	43	43	43	43	43
			24	54	54	54	68	54	54	54	54	54	54	54	54
—	100 mph	350S162	16	54	54	54	54	43	43	43	43	43	54	54	54
			24	68	68	68	68	68	68	68	68	68	68	68	68
		550S162	16	43	43	43	43	43	43	43	43	43	43	43	43
			24	54	54	54	68	54	54	54	54	54	54	54	54
—	110 mph	350S162	16	54	54	54	54	43	43	43	43	54	54	54	54
			24	68	68	68	68	68	68	68	68	68	68	68	97
		550S162	16	43	43	43	43	43	43	43	43	43	43	43	43
			24	54	54	54	68	54	54	54	54	54	54	54	54

For SI: 1 inch = 25.4 mm, 1 foot = 304.8 mm, 1 mil = 0.0254 mm, 1 mile per hour = 0.447 m/s, 1 pound per square foot = 0.0479kPa, 1 ksi = 1000 psi = 6.895 MPa.

a. Deflection criterion: *L*/240.

b. Design load assumptions: Top and middle floor dead load is 10 psf. Top floor live load is 30 psf. Middle floor live load is 40 psf. Roof/ceiling dead load is 12 psf. Attic live load is 10 psf.

c. Building width is in the direction of horizontal framing members supported by the wall studs.

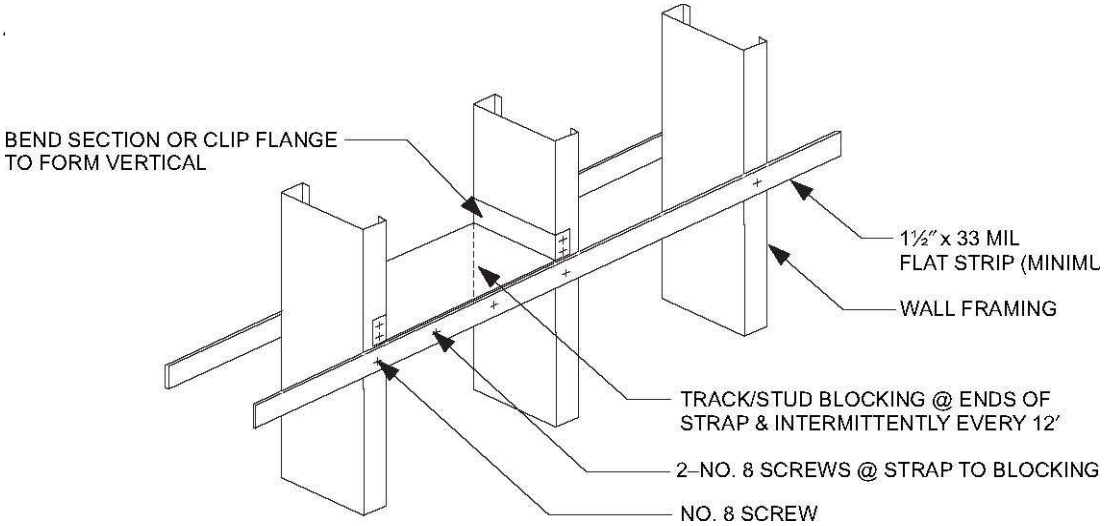

For SI: 1 mil = 0.0254 mm, 1 inch = 25.4 mm.

FIGURE 603.3.3(1)
STUD BRACING WITH STRAPPING ONLY

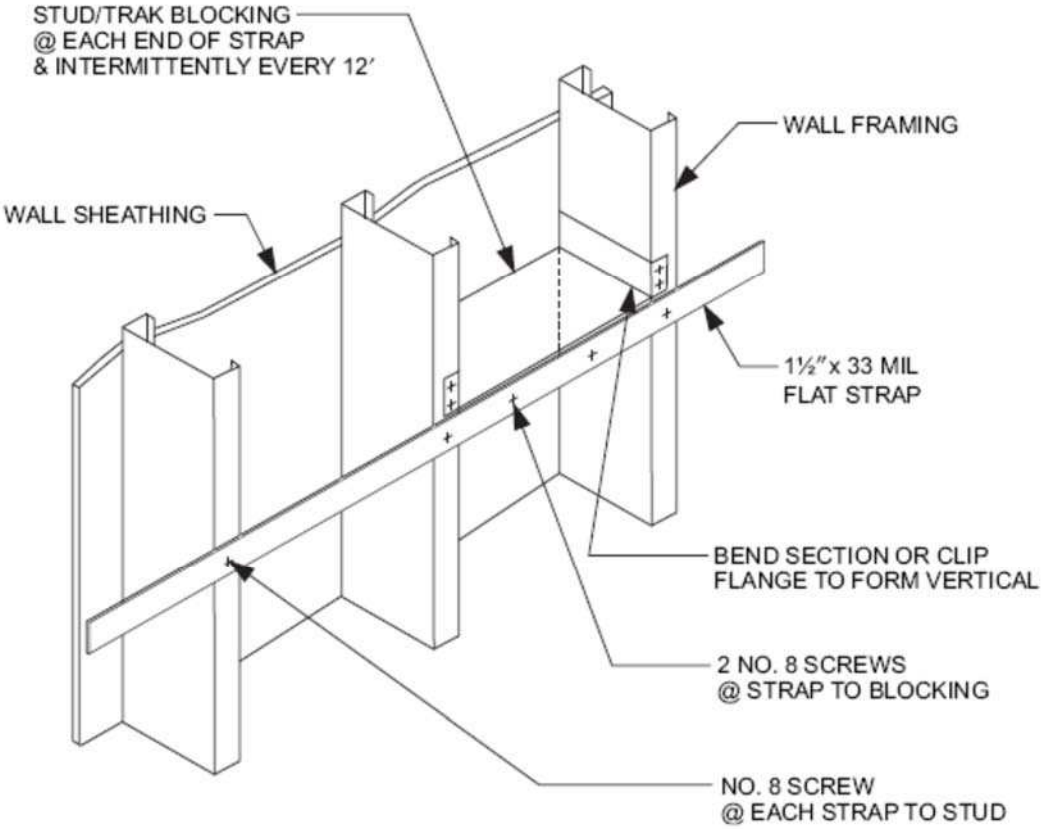

For SI: 1 mil = 0.0254 mm, 1 inch = 25.4 mm.

FIGURE 603.3.3(2)
STUD BRACING WITH STRAPPING AND SHEATHING MATERIAL

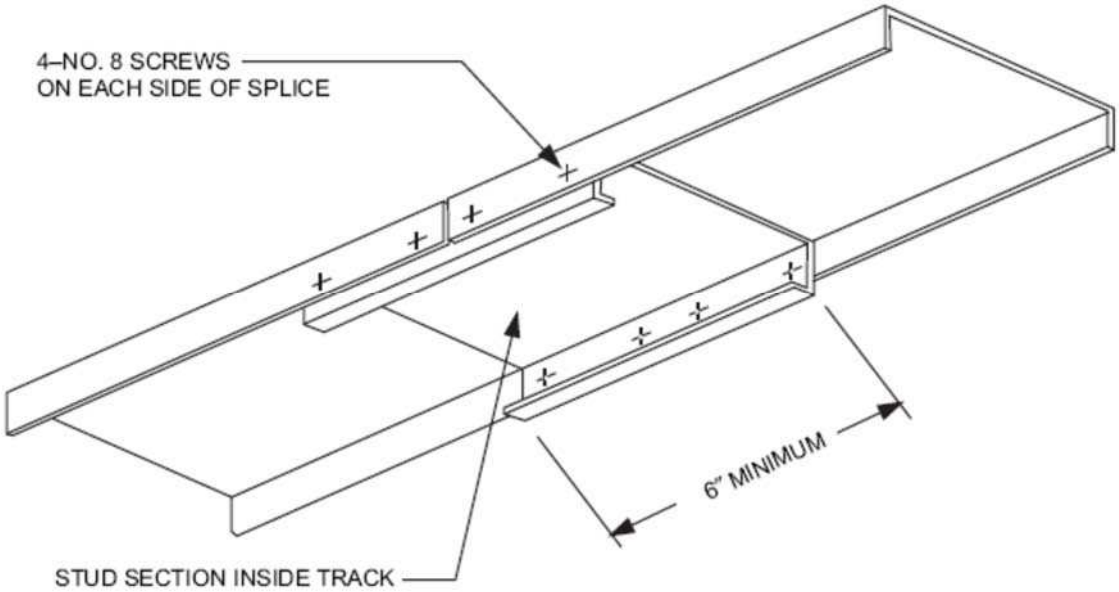

For SI: 1 inch = 25.4 mm.

FIGURE 603.3.5
TRACK SPLICE

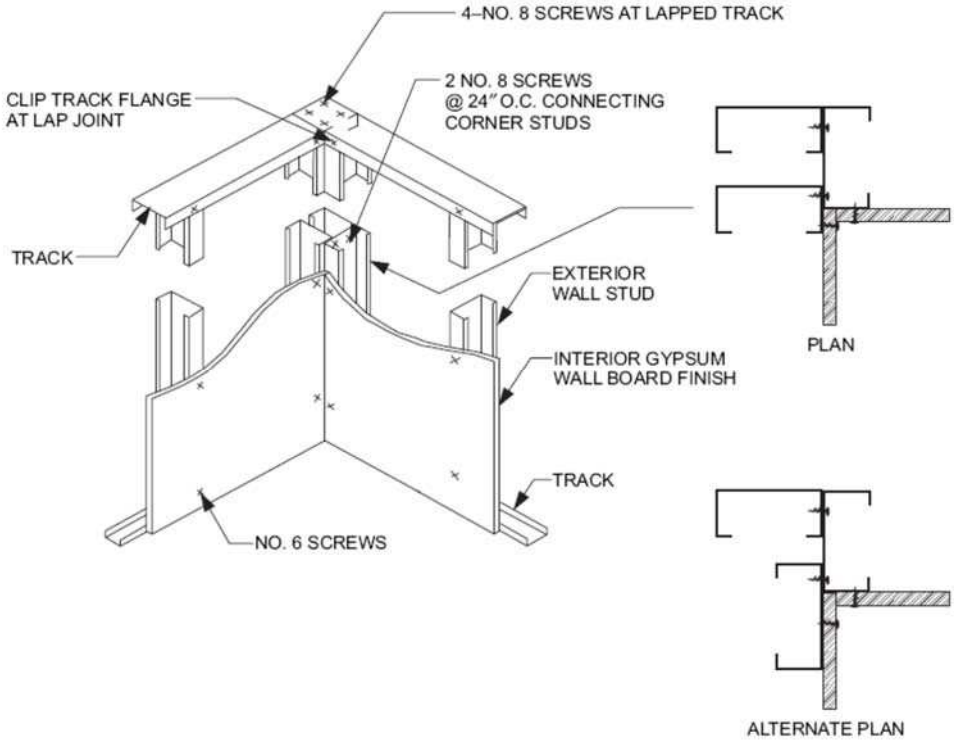

For SI: 1 inch = 25.4 mm.

FIGURE 603.4
CORNER FRAMING

TABLE 603.3.2.1(1)
ALL BUILDING WIDTHS GABLE ENDWALLS 8, 9 OR 10 FEET IN HEIGHT[a,b,c]
33 ksi STEEL

WIND SPEED		MEMBER SIZE	STUD SPACING (inches)	MINIMUM STUD THICKNESS (Mils)		
Exp. B	Exp. C			8-foot studs	9-foot studs	10-foot studs
85 mph	—	350S162	16	33	33	33
			24	33	33	33
		550S162	16	33	33	33
			24	33	33	33
90 mph	—	350S162	16	33	33	33
			24	33	33	33
		550S162	16	33	33	33
			24	33	33	33
100 mph	85 mph	350S162	16	33	33	33
			24	33	33	43
		550S162	16	33	33	33
			24	33	33	33
110 mph	90 mph	350S162	16	33	33	33
			24	33	33	43
		550S162	16	33	33	33
			24	33	33	33
—	100 mph	350S162	16	33	33	43
			24	43	43	54
		550S162	16	33	33	33
			24	33	33	33
—	110 mph	350S162	16	33	43	43
			24	43	54	54
		550S162	16	33	33	33
			24	33	33	43

For SI: 1 inch = 25.4, 1 foot = 304.8 mm, 1 mil = 0.0254 mm, 1 mile per hour = 0.447 m/s, 1 pound per square foot = 0.0479kPa, 1 ksi = 6.895 MPa.

a. Deflection criterion *L*/240.

b. Design load assumptions: Ground snow load is 70 psf. Roof and ceiling dead load is 12 psf. Floor dead load is 10 psf. Floor live load is 40 psf. Attic dead load is 10 psf.

c. Building width is in the direction of horizontal framing members supported by the wall studs.

TABLE 603.3.2.1(2)
ALL BUILDING WIDTHS GABLE ENDWALLS 8, 9 OR 10 FEET IN HEIGHT[a,b,c]
50 ksi STEEL

WIND SPEED		MEMBER SIZE	STUD SPACING (inches)	MINIMUM STUD THICKNESS (Mils)		
Exp. B	Exp. C			8-foot studs	9-foot studs	10-foot studs
85 mph	—	350S162	16	33	33	33
			24	33	33	33
		550S162	16	33	33	33
			24	33	33	33
90 mph	—	350S162	16	33	33	33
			24	33	33	33
		550S162	16	33	33	33
			24	33	33	33
100 mph	85 mph	350S162	16	33	33	33
			24	33	33	33
		550S162	16	33	33	33
			24	33	33	33
110 mph	90 mph	350S162	16	33	33	33
			24	33	33	43
		550S162	16	33	33	33
			24	33	33	33
—	100 mph	350S162	16	33	33	33
			24	33	33	43
		550S162	16	33	33	33
			24	33	33	33
—	110 mph	350S162	16	33	33	33
			24	33	43	54
		550S162	16	33	33	33
			24	33	33	33

For SI: 1 inch = 25.4, 1 foot = 304.8 mm, 1 mil = 0.0254 mm, 1 mile per hour = 0.447 m/s, 1 pound per square foot = 0.0479kPa, 1 ksi = 6.895 MPa.

a. Deflection criterion *L*/240.

b. Design load assumptions: Ground snow load is 70 psf. Roof and ceiling dead load is 12 psf. Floor dead load is 10 psf. Floor live load is 40 psf. Attic dead load is 10 psf.

c. Building width is in the direction of horizontal framing members supported by the wall studs.

TABLE 603.3.2.1(3)
ALL BUILDING WIDTHS GABLE ENDWALLS OVER 10 FEET IN HEIGHT[a,b,c]
33 ksi STEEL

WIND SPEED		MEMBER SIZE	STUD SPACING (inches)	MINIMUM STUD THICKNESS (Mils)					
				Stud Height, h (feet)					
Exp. B	Exp. C			10 < h ≤ 12	12 < h ≤ 14	14 < h ≤ 16	16 < h ≤ 18	18 < h ≤ 20	20 < h ≤ 22
85 mph	—	350S162	16	33	43	54	97	—	—
			24	43	54	97	—	—	—
		550S162	16	33	33	33	43	43	54
			24	33	33	43	54	68	97
90 mph	—	350S162	16	33	43	68	97	—	—
			24	43	68	97	—	—	—
		550S162	16	33	33	33	43	54	54
			24	33	33	43	54	68	97
100 mph	85 mph	350S162	16	43	54	97	—	—	—
			24	54	97	—	—	—	—
		550S162	16	33	33	43	54	54	68
			24	33	43	54	68	97	97
110 mph	90 mph	350S162	16	43	68	—	—	—	—
			24	68	—	—	—	—	—
		550S162	16	33	43	43	54	68	97
			24	43	54	68	97	97	—
—	100 mph	350S162	16	54	97	—	—	—	—
			24	97	—	—	—	—	—
		550S162	16	33	43	54	68	97	—
			24	43	68	97	97	—	—
—	110 mph	350S162	16	68	97	—	—	—	—
			24	97	—	—	—	—	—
		550S162	16	43	54	68	97	97	—
			24	54	68	97	—	—	—

For SI: 1 inch = 25.4, 1 foot = 304.8 mm, 1 mil = 0.0254 mm, 1 mile per hour = 0.447 m/s, 1 pound per square foot = 0.0479kPa, 1 ksi = 6.895 MPa.

a. Deflection criterion *L*/240.

b. Design load assumptions: Ground snow load is 70 psf. Roof and ceiling dead load is 12 psf. Floor dead load is 10 psf. Floor live load is 40 psf. Attic dead load is 10 psf.

c. Building width is in the direction of horizontal framing members supported by the wall studs.

TABLE 603.3.2.1(4)
ALL BUILDING WIDTHS GABLE ENDWALLS OVER 10 FEET IN HEIGHT[a,b,c]
50 ksi STEEL

WIND SPEED		MEMBER SIZE	STUD SPACING (inches)	MINIMUM STUD THICKNESS (Mils)					
				Stud Height, h (feet)					
Exp. B	Exp. C			10 < h ≤ 12	12 < h ≤ 14	14 < h ≤ 16	16 < h ≤ 18	18 < h ≤ 20	20 < h ≤ 22
85 mph	—	350S162	16	33	43	54	97	—	—
			24	33	54	97	—	—	—
		550S162	16	33	33	33	33	43	54
			24	33	33	33	43	54	97
90 mph	—	350S162	16	33	43	68	97	—	—
			24	43	68	97	—	—	—
		550S162	16	33	33	33	33	43	54
			24	33	33	43	43	68	97
100 mph	85 mph	350S162	16	33	54	97	—	—	—
			24	54	97	—	—	—	—
		550S162	16	33	33	33	43	54	68
			24	33	33	43	54	97	97
110 mph	90 mph	350S162	16	43	68	—	—	—	—
			24	68	—	—	—	—	—
		550S162	16	33	33	43	43	68	97
			24	33	43	54	68	97	—
—	100 mph	350S162	16	54	97	—	—	—	—
			24	97	—	—	—	—	—
		550S162	16	33	33	43	54	97	—
			24	43	54	54	97	—	—
—	110 mph	350S162	16	54	97	—	—	—	—
			24	97	—	—	—	—	—
		550S162	16	33	43	54	68	97	—
			24	43	54	68	97	—	—

For SI: 1 inch = 25.4, 1 foot = 304.8 mm, 1 mil = 0.0254 mm, 1 mile per hour = 0.447 m/s, 1 pound per square foot = 0.0479kPa, 1 ksi = 6.895 MPa.

a. Deflection criterion *L*/240.

b. Design load assumptions: Ground snow load is 70 psf. Roof and ceiling dead load is 12 psf. Floor dead load is 10 psf. Floor live load is 40 psf. Attic dead load is 10 psf.

c. Building width is in the direction of horizontal framing members supported by the wall studs.

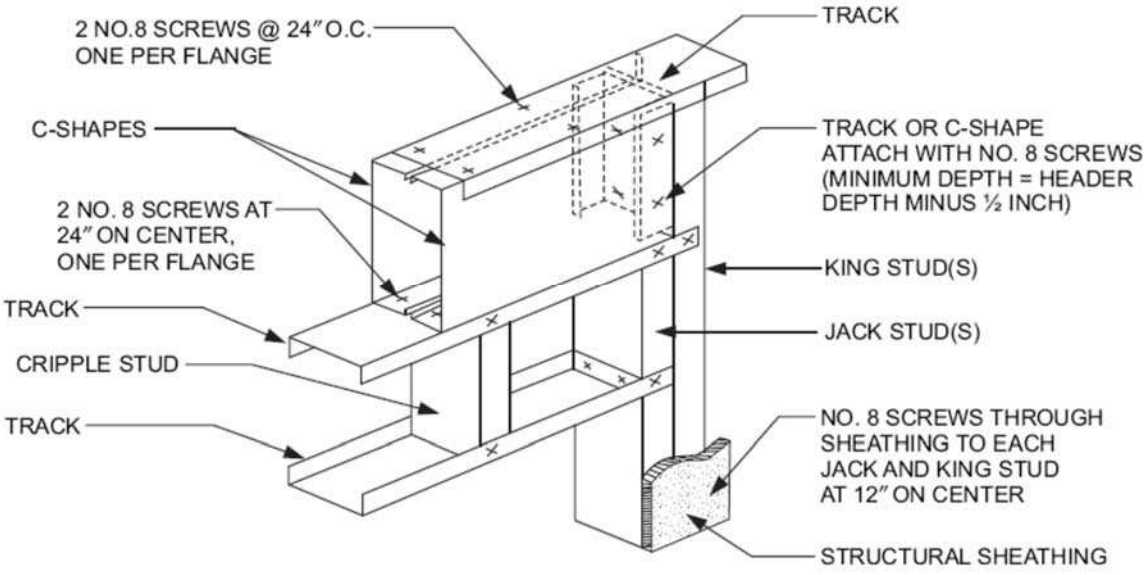

For SI: 1 inch = 25.4 mm.

FIGURE 603.6(1)
BOX BEAM HEADER

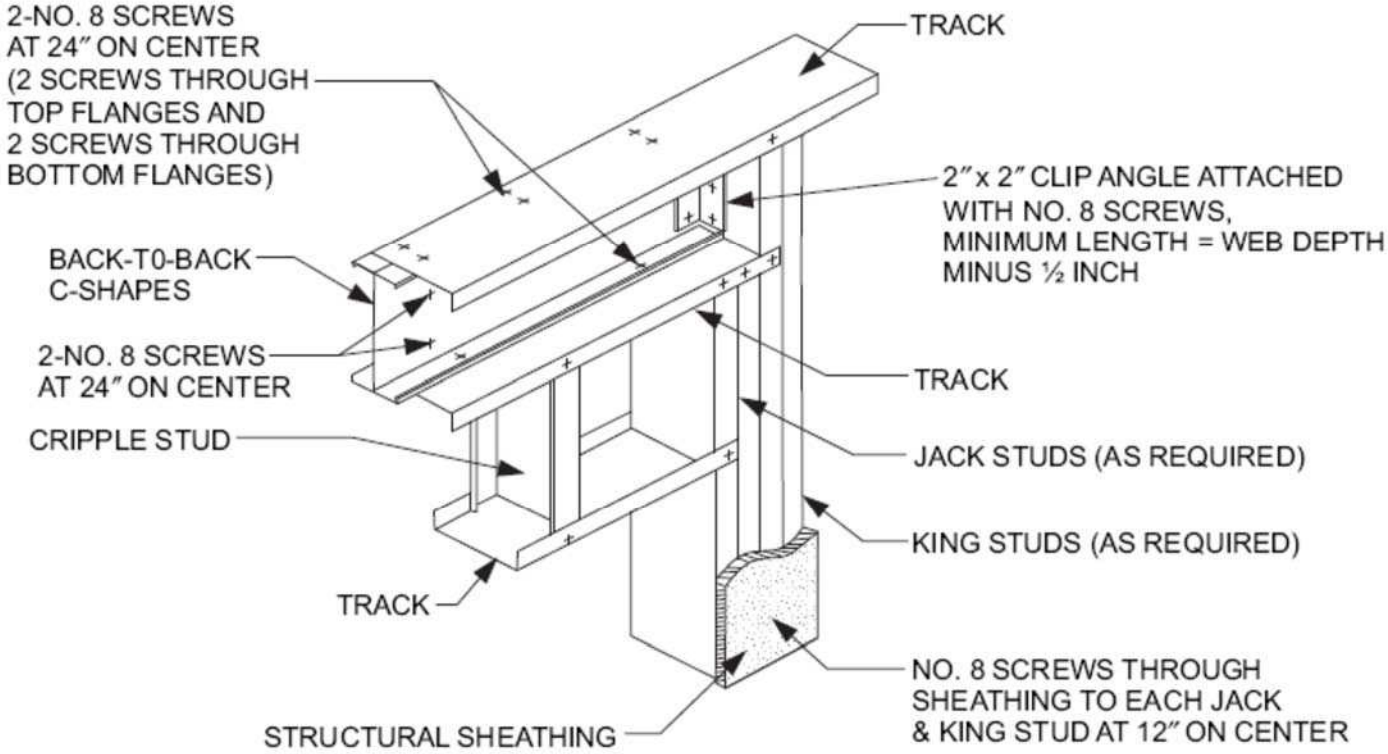

For SI: 1 inch = 25.4 mm.

FIGURE 603.6(2)
BACK-TO-BACK HEADER

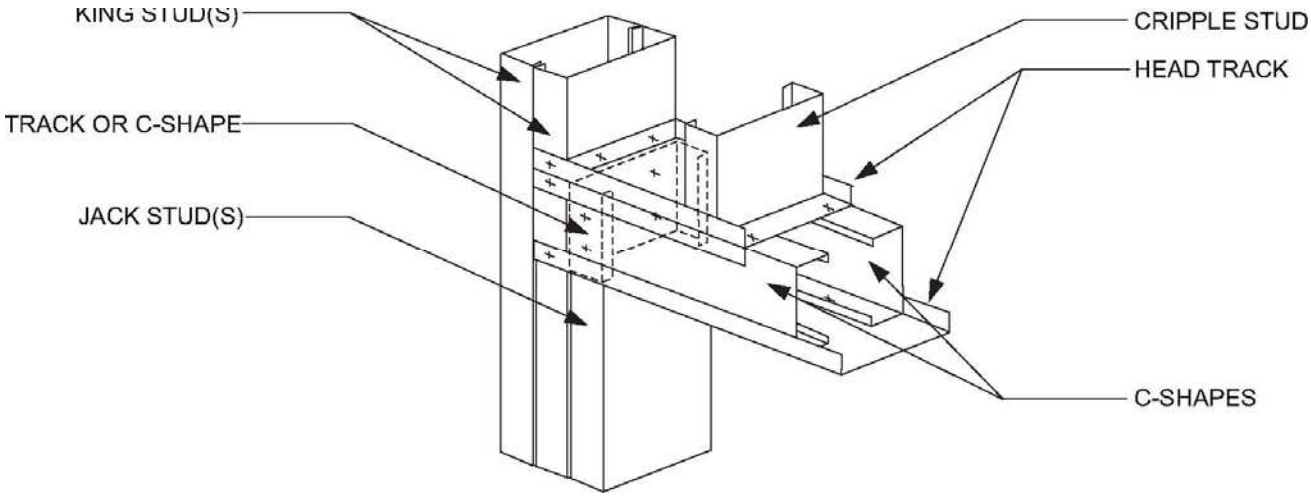

FIGURE 603.6.1(1)
BOX BEAM HEADER IN GABLE ENDWALL

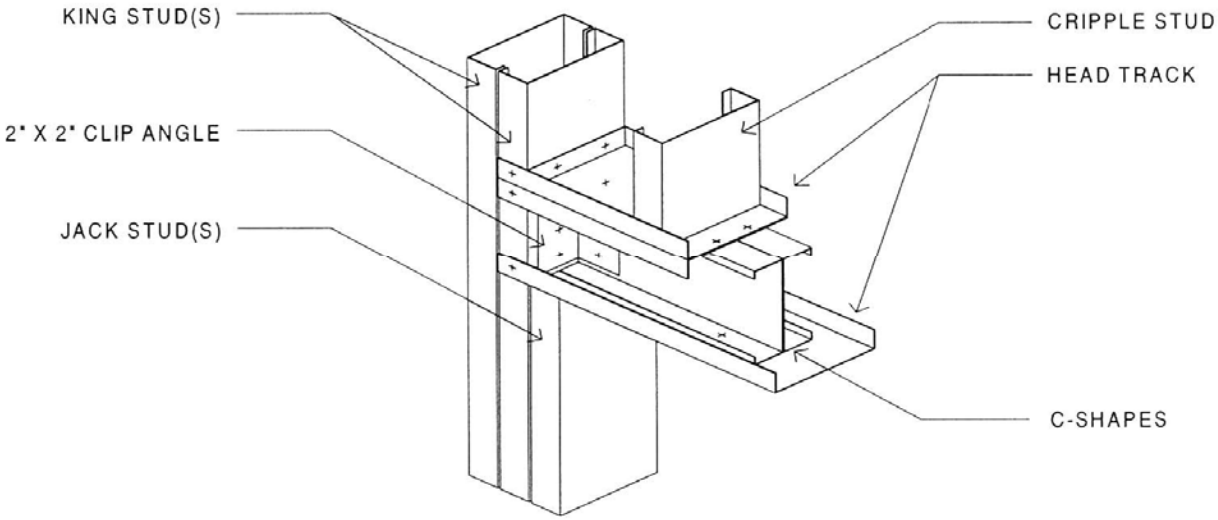

For SI: 1 inch = 25.4 mm.

FIGURE 603.6.1(2)
BACK-TO-BACK HEADER IN GABLE ENDWALL

TABLE 603.6(1)
BOX-BEAM HEADER SPANS
Headers Supporting Roof and Ceiling Only (33 ksi steel)[a, b]

MEMBER DESIGNATION	GROUND SNOW LOAD (20 psf)					GROUND SNOW LOAD (30 psf)				
	Building width[c] (feet)					Building width[c] (feet)				
	24	28	32	36	40	24	28	32	36	40
2-350S162-33	3’-3”	2’-8”	2’-2”	—	—	2’-8”	2’-2”	—	—	—
2-350S162-43	4’-2”	3’-9”	3’-4”	2’-11”	2’-7”	3’-9”	3’-4”	2’-11”	2’-7”	2’-2”
2-350S162-54	5’-0”	4’-6”	4’-1”	3’-8”	3’-4”	4’-6”	4’-1”	3’-8”	3’-3”	3’-0”
2-350S162-68	5’-7”	5’-1”	4’-7”	4’-3”	3’-10”	5’-1”	4’-7”	4’-2”	3’-10”	3’-5”
2-350S162-97	7’-1”	6’-6”	6’-1”	5’-8”	5’-3”	6’-7”	6’-1”	5’-7”	5’-3”	4’-11”
2-550S162-33	4’-8”	4’-0”	3’-6”	3’-0”	2’-6”	4’-1”	3’-6”	3’-0”	2’-6”	—
2-550S162-43	6’-0”	5’-4”	4’-10”	4’-4”	3’-11”	5’-5”	4’-10”	4’-4”	3’-10”	3’-5”
2-550S162-54	7’-0”	6’-4”	5’-9”	5’-4”	4’-10”	6’-5”	5’-9”	5’-3”	4’-10”	4’-5”
2-550S162-68	8’-0”	7’-4”	6’-9”	6’-3”	5’-10”	7’-5”	6’-9”	6’-3”	5’-9”	5’-4”
2-550S162-97	9’-11”	9’-2”	8’-6”	8’-0”	7’-6”	9’-3”	8’-6”	8’-0”	7’-5”	7’-0”
2-800S162-33	4’-5”	3’-11”	3’-5”	3’-1”	2’-10”	3’-11”	3’-6”	3’-1”	2’-9”	2’-3”
2-800S162-43	7’-3”	6’-7”	5’-11”	5’-4”	4’-10”	6’-7”	5’-11”	5’-4”	4’-9”	4’-3”
2-800S162-54	8’-10”	8’-0”	7’-4”	6’-9”	6’-2”	8’-1”	7’-4”	6’-8”	6’-1”	5’-7”
2-800S162-68	10’-5”	9’-7”	8’-10”	8’-2”	7’-7”	9’-8”	8’-10”	8’-1”	7’-6”	7’-0”
2-800S162-97	13’-1”	12’-1”	11’-3”	10’-7”	10’-0”	12’-2”	11’-4”	10’-6”	10’-0”	9’-4”
2-1000S162-43	7’-10”	6’-10”	6’-1”	5’-6”	5’-0”	6’-11”	6’-1”	5’-5”	4’-11”	4’-6”
2-1000S162-54	10’-0”	9’-1”	8’-3”	7’-7”	7’-0”	9’-2”	8’-4”	7’-7”	6’-11”	6’-4”
2-1000S162-68	11’-11”	10’-11”	10’-1”	9’-4”	8’-8”	11’-0”	10’-1”	9’-3”	8’-7”	8’-0”
2-1000S162-97	15’-3”	14’-3”	13’-5”	12’-6”	11’-10”	14’-4”	13’-5”	12’-6”	11’-9”	11’-0”
2-1200S162-54	11’-1”	10’-0”	9’-2”	8’-5”	7’-9”	10’-1”	9’-2”	8’-4”	7’-7”	7’-0”
2-1200S162-68	13’-3”	12’-1”	11’-2”	10-4”	9’-7”	12’-3”	11’-2”	10’-3”	9’-6”	8’-10”
2-1200S162-97	16’-8”	15’-7”	14’-8”	13’-11”	13’-3”	15’-8”	14’-8”	13’-11”	13’-2”	12’-6”

For SI: 1 inch = 25.4 mm, 1 foot = 304.8 mm, 1 pound per square foot = 0.0479kPa, 1 pound per square inch = 6.895kPa.

a. Deflection criterion: $L/360$ for live loads, $L/240$ for total loads.

b. Design load assumptions:
Roof/Ceiling dead load is 12 psf.
Attic dead load is 10 psf.

c. Building width is in the direction of horizontal framing members supported by the header.

TABLE 603.6(2)
BOX-BEAM HEADER SPANS
Headers Supporting Roof and Ceiling Only (50 ksi steel)[a, b]

MEMBER DESIGNATION	GROUND SNOW LOAD (20 psf)					GROUND SNOW LOAD (30 psf)				
	Building width[c] (feet)					Building width[c] (feet)				
	24	28	32	36	40	24	28	32	36	40
2-350S162-33	4′-4″	3′-11″	3′-6″	3′-2″	2′-10″	3′-11″	3′-6″	3′-1″	2′-9″	2′-5″
2-350S162-43	5′-6″	5′-0″	4′-7″	4′-2″	3′-10″	5′-0″	4′-7″	4′-2″	3′-10″	3′-6″
2-350S162-54	6′-2″	5′-10″	5′-8″	5′-3″	4′-10″	5′-11″	5′-8″	5′-2″	4′-10″	4′-6″
2-350S162-68	6′-7″	6′-3″	6′-0″	5′-10″	5′-8″	6′-4″	6′-1″	5′-10″	5′-8″	5′-6″
2-350S162-97	7′-3″	6′-11″	6′-8″	6′-5″	6′-3″	7′-0″	6′-8″	6′-5″	6′-3″	6′-0″
2-550S162-33	6′-2″	5′-6″	5′-0″	4′-7″	4′-2″	5′-7″	5′-0″	4′-6″	4′-1″	3′-8″
2-550S162-43	7′-9″	7′-2″	6′-7″	6′-1″	5′-8″	7′-3″	6′-7″	6′-1″	5′-7″	5′-2″
2-550S162-54	8′-9″	8′-5″	8′-1″	7′-9″	7′-3″	8′-6″	8′-1″	7′-8″	7′-2″	6′-8″
2-550S162-68	9′-5″	9′-0″	8′-8″	8′-4″	8′-1″	9′-1″	8′-8″	8′-4″	8′-1″	7′-10″
2-550S162-97	10′-5″	10′-0″	9′-7″	9′-3″	9′-0″	10′-0″	9′-7″	9′-3″	8′-11″	8′-8″
2-800S162-33	4′-5″	3′-11″	3′-5″	3′-1″	2′-10″	3′-11″	3′-6″	3′-1″	2′-9″	2′-6″
2-800S162-43	9′-1″	8′-5″	7′-8″	6′-11″	6′-3″	8′-6″	7′-8″	6′-10″	6′-2″	5′-8″
2-800S162-54	10′-10″	10′-2″	9′-7″	9′-0″	8′-5″	10′-2″	9′-7″	8′-11″	8′-4″	7′-9″
2-800S162-68	12′-8″	11′-10″	11′-2″	10′-7″	10′-1″	11′-11″	11′-2″	10′-7″	10′-0″	9′-6″
2-800S162-97	14′-2″	13′-6″	13′-0″	12′-7″	12′-2″	13′-8″	13′-1″	12′-7″	12′-2″	11′-9″
2-1000S162-43	7′-10″	6′-10″	6′-1″	5′-6″	5′-0″	6′-11″	6′-1″	5′-5″	4′-11″	4′-6″
2-1000S162-54	12′-3″	11′-5″	10′-9″	10′-2″	9′-6″	11′-6″	10′-9″	10′-1″	9′-5″	8′-9″
2-1000S162-68	14′-5″	13′-5″	12′-8″	12′-0″	11′-6″	13′-6″	12′-8″	12′-0″	11′-5″	10′-10″
2-1000S162-97	17′-1″	16′-4″	15′-8″	14′-11″	14′-3″	16′-5″	15′-9″	14′-10″	14′-1″	13′-6″
2-1200S162-54	12′-11″	11′-3″	10′-0″	9′-0″	8′-2″	11′-5″	10′-0″	9′-0″	8′-1″	7′-4″
2-1200S162-68	15′-11″	14′-10″	14′-0″	13′-4″	12′-8″	15′-0″	14′-0″	13′-3″	12′-7″	11′-11″
2-1200S162-97	19′-11″	18′-7″	17′-6″	16′-8″	15′-10″	18′-9″	17′-7″	16′-7″	15′-9″	15′-0″

For SI: 1 inch = 25.4 mm, 1 foot = 304.8 mm, 1 pound per square foot = 0.0479kPa, 1 pound per square inch = 6.895kPa.

a. Deflection criterion: $L/360$ for live loads, $L/240$ for total loads.

b. Design load assumptions:
Roof/Ceiling dead load is 12 psf.
Attic dead load is 10 psf.

c. Building width is in the direction of horizontal framing members supported by the header.

TABLE 603.6(3)
BOX-BEAM HEADER SPANS
Headers Supporting Roof and Ceiling Only (33 ksi steel)[a, b]

MEMBER DESIGNATION	GROUND SNOW LOAD (50 psf)					GROUND SNOW LOAD (70 psf)				
	Building width[c] (feet)					Building width[c] (feet)				
	24	28	32	36	40	24	28	32	36	40
2-350S162-33	—	—	—	—	—	—	—	—	—	—
2-350S162-43	2′-4″	—	—	—	—	—	—	—	—	—
2-350S162-54	3′-1″	2′-8″	2′-3″	—	—	2′-1″	—	—	—	—
2-350S162-68	3′-7″	3′-2″	2′-8″	2′-3″	—	2′-6″	—	—	—	—
2-350S162-97	5′-1″	4′-7″	4′-3″	3′-11″	3′-7″	4′-1″	3′-8″	3′-4″	3′-0″	2′-8″
2-550S162-33	2′-2″	—	—	—	—	—	—	—	—	—
2-550S162-43	3′-8″	3′-1″	2′-6″	—	—	2′-3″	—	—	—	—
2-550S162-54	4′-7″	4′-0″	3′-6″	3′-0″	2′-6″	3′-3″	2′-8″	2′-1″	—	—
2-550S162-68	5′-6″	4′-11″	4′-5″	3′-11″	3′-6″	4′-3″	3′-8″	3′-1″	2′-7″	2′-1″
2-550S162-97	7′-3″	6′-7″	6′-1″	5′-8″	5′-3″	5′-11″	5′-4″	4′-11″	4′-6″	4′-1″
2-800S162-33	2′-7″	—	—	—	—	—	—	—	—	—
2-800S162-43	4′-6″	3′-9″	3′-1″	2′-5″	—	2′-10″	—	—	—	—
2-800S162-54	5′-10″	5′-1″	4′-6″	3′-11″	3′-4″	4′-3″	3′-6″	2′-9″	—	—
2-800S162-68	7′-2″	6′-6″	5′-10″	5′-3″	4′-8″	5′-7″	4′-10″	4′-2″	3′-7″	2′-11″
2-800S162-97	9′-7″	8′-9″	8′-2″	7′-7″	7′-0″	7′-11″	7′-2″	6′-7″	6′-0″	5′-7″
2-1000S162-43	4′-8″	4′-1″	3′-6″	2′-9″	—	3′-3″	2′-2″	—	—	—
2-1000S162-54	6′-7″	5′-10″	5′-1″	4′-5″	3′-9″	4′-10″	4′-0″	3′-2″	2′-3″	—
2-1000S162-68	8′-3″	7′-5″	6′-8″	6′-0″	5′-5″	6′-5″	5′-7″	4′-9″	4′-1″	3′-5″
2-1000S162-97	11′-4″	10′-5″	9′-8″	9′-0″	8′-5″	9′-5″	8′-6″	7′-10″	7′-2″	6′-7″
2-1200S162-54	7′-3″	6′-5″	5′-7″	4′-10″	4′-2″	5′-4″	4′-4″	3′-5″	2′-5″	—
2-1200S162-68	9′-2″	8′-2″	7′-5″	6′-8″	6′-0″	7′-1″	6′-2″	5′-4″	4′-6″	3′-9″
2-1200S162-97	12′-10″	11′-9″	10′-11″	10′-2″	9′-6″	10′-7″	9′-8″	8′-10″	8′-2″	7′-6″

For SI: 1 inch = 25.4 mm, 1 foot = 304.8 mm, 1 pound per square foot = 0.0479kPa, 1 pound per square inch = 6.895kPa.

a. Deflection criterion: $L/360$ for live loads, $L/240$ for total loads.

b. Design load assumptions:
Roof/Ceiling dead load is 12 psf.
Attic dead load is 10 psf.

c. Building width is in the direction of horizontal framing members supported by the header.

TABLE 603.6(4)
BOX-BEAM HEADER SPANS
Headers Supporting Roof and Ceiling Only (50 ksi steel)[a, b]

MEMBER DESIGNATION	GROUND SNOW LOAD (50 psf)					GROUND SNOW LOAD (70 psf)				
	Building width[c] (feet)					Building width[c] (feet)				
	24	28	32	36	40	24	28	32	36	40
2-350S162-33	2′-7″	2′-2″	—	—	—	—	—	—	—	—
2-350S162-43	3′-8″	3′-3″	2′-10″	2′-6″	2′-1″	2′-8″	2′-3″	—	—	—
2-350S162-54	4′-8″	4′-2″	3′-9″	3′-5″	3′-1″	3′-7″	3′-2″	2′-9″	2′-5″	2′-0″
2-350S162-68	5′-7″	5′-2″	4′-9″	4′-4″	3′-11″	4′-7″	4′-1″	3′-7″	3′-2″	2′-10″
2-350S162-97	6′-2″	5′-11″	5′-8″	5′-6″	5′-4″	5′-8″	5′-5″	5′-3″	4′-11″	4′-7″
2-550S162-33	3′-11″	3′-4″	2′-10″	2′-4″	—	2′-7″	—	—	—	—
2-550S162-43	5′-4″	4′-10″	4′-4″	3′-10″	3′-5″	4′-2″	3′-7″	3′-1″	2′-7″	2′-1″
2-550S162-54	6′-11″	6′-3″	5′-9″	5′-3″	4′-9″	5′-6″	4′-11″	4′-5″	3′-11″	3′-5″
2-550S162-68	8′-0″	7′-6″	6′-11″	6′-5″	5′-11″	6′-9″	6′-1″	5′-6″	5′-0″	4′-7″
2-550S162-97	8′-11″	8′-6″	8′-2″	7′-11″	7′-8″	8′-1″	7′-9″	7′-6″	7′-1″	6′-7″
2-800S162-33	2′-8″	2′-4″	2′-1″	1′-11″	1′-9″	2′-0″	1′-9″	—	—	—
2-800S162-43	5′-10″	5′-2″	4′-7″	4′-2″	3′-10″	4′-5″	3′-11″	3′-6″	3′-0″	2′-6″
2-800S162-54	8′-0″	7′-3″	6′-8″	6′-1″	5′-7″	6′-5″	5′-9″	5′-1″	4′-7″	4′-0″
2-800S162-68	9′-9″	9′-0″	8′-3″	7′-8″	7′-1″	8′-0″	7′-3″	6′-7″	6′-0″	5′-6″
2-800S162-97	12′-1″	11′-7″	11′-2″	10′-8″	10′-2″	11′-0″	10′-4″	9′-9″	9′-2″	8′-7″
2-1000S162-43	4′-8″	4′-1″	3′-8″	3′-4″	3′-0″	3′-6″	3′-1″	2′-9″	2′-6″	2′-3″
2-1000S162-54	9′-1″	8′-2″	7′-3″	6′-7″	6′-0″	7′-0″	6′-2″	5′-6″	5′-0″	4′-6″
2-1000S162-68	11′-1″	10′-2″	9′-5″	8′-8″	8′-1″	9′-1″	8′-3″	7′-6″	6′-10″	6′-3″
2-1000S162-97	13′-9″	12′-11″	12′-2″	11′-7″	11′-1″	11′-11″	11′-3″	10′-7″	9′-11″	9′-4″
2-1200S162-54	7′-8″	6′-9″	6′-1″	5′-6″	5′-0″	5′-10″	5′-1″	4′-7″	4′-1″	3′-9″
2-1200S162-68	12′-3″	11′-3″	10′-4″	9′-7″	8′-11″	10′-1″	9′-1″	8′-3″	7′-6″	6′-10″
2-1200S162-97	15′-4″	14′-5″	13′-7″	12′-11″	12′-4″	13′-4″	12′-6″	11′-10″	11′-1″	10′-5″

For SI: 1 inch = 25.4 mm, 1 foot = 304.8 mm, 1 pound per square foot = 0.0479kPa, 1 pound per square inch = 6.895kPa.

a. Deflection criterion: *L*/360 for live loads, *L*/240 for total loads.

b. Design load assumptions:
Roof/Ceiling dead load is 12 psf.
Attic dead load is 10 psf.

c. Building width is in the direction of horizontal framing members supported by the header.

TABLE 603.6(5)
BOX-BEAM HEADER SPANS
Headers Supporting One Floor, Roof and Ceiling (33 ksi steel)[a, b]

MEMBER DESIGNATION	GROUND SNOW LOAD (20 psf)					GROUND SNOW LOAD (30 psf)				
	Building width[c] (feet)					Building width[c] (feet)				
	24	28	32	36	40	24	28	32	36	40
2-350S162-33	—	—	—	—	—	—	—	—	—	—
2-350S162-43	2′-2″	—	—	—	—	2′-1″	—	—	—	—
2-350S162-54	2′-11″	2′-5″	—	—	—	2′-10″	2′-4″	—	—	—
2-350S162-68	3′-8″	3′-2″	2′-9″	2′-4″	—	3′-7″	3′-1″	2′-8″	2′-3″	—
2-350S162-97	4′-11″	4′-5″	4′-2″	3′-8″	3′-5″	4′-10″	4′-5″	4′-0″	3′-8″	3′-4″
2-550S162-33	—	—	—	—	—	—	—	—	—	—
2-550S162-43	3′-5″	2′-9″	2′-1″	—	—	3′-3″	2′-7″	—	—	—
2-550S162-54	4′-4″	3′-9″	3′-2″	2′-7″	2′-1″	4′-3″	3′-7″	3′-1″	2′-6″	—
2-550S162-68	5′-3″	4′-8″	4′-1″	3′-7″	3′-2″	5′-2″	4′-7″	4′-0″	3′-6″	3′-1″
2-550S162-97	7′-0″	6′-5″	5′-10″	5′-5″	5′-0″	6′-11″	6′-4″	5′-9″	5′-4″	4′-11″
2-800S162-33	2′-1″	—	—	—	—	—	—	—	—	—
2-800S162-43	4′-2″	3′-4″	2′-7″	—	—	4′-0″	3′-3″	2′-5″	—	—
2-800S162-54	5′-6″	4′-9″	4′-1″	3′-5″	2′-9″	5′-5″	4′-8″	3′-11″	3′-3″	2′-8″
2-800S162-68	6′-11″	6′-2″	5′-5″	4′-10″	4′-3″	6′-9″	6′-0″	5′-4″	4′-8″	4′-1″
2-800S162-97	9′-4″	8′-6″	7′-10″	7′-3″	6′-8″	9′-2″	8′-4″	7′-8″	7′-1″	6′-7″
2-1000S162-43	4′-4″	3′-9″	2′-11″	—	—	4′-3″	3′-8″	2′-9″	—	—
2-1000S162-54	6′-3″	5′-5″	4′-7″	3′-11″	3′-2″	6′-1″	5′-3″	4′-6″	3′-9″	3′-0″
2-1000S162-68	7′-11″	7′-0″	6′-3″	5′-6″	4′-10″	7′-9″	6′-10″	6′-1″	5′-4″	4′-9″
2-1000S162-97	11′-0″	10′-1″	9′-3″	8′-7″	8′-0″	10′-11″	9′-11″	9′-2″	8′-5″	7′-10″
2-1200S162-54	6′-11″	5′-11″	5′-1″	4′-3″	3′-5″	6′-9″	5′-9″	4′-11″	4′-1″	3′-3″
2-1200S162-68	8′-9″	7′-9″	6′-11″	6′-1″	5′-4″	8′-7″	7′-7″	6′-9″	5′-11″	5′-3″
2-1200S162-97	12′-4″	11′-5″	10′-6″	9′-8″	9′-0″	12′-3″	11′-3″	10′-4″	9′-6″	8′-10″

For SI: 1 inch = 25.4 mm, 1 foot = 304.8 mm, 1 pound per square foot = 0.0479kPa, 1 pound per square inch = 6.895kPa.

a. Deflection criterion: *L*/360 for live loads, *L*/240 for total loads.

b. Design load assumptions:
Second floor dead load is 10 psf.
Roof/Ceiling dead load is 12 psf.
Second floor live load is 30 psf.
Attic dead load is 10 psf.

c. Building width is in the direction of horizontal framing members supported by the header.

TABLE 603.6(6)
BOX-BEAM HEADER SPANS
Headers Supporting One Floor, Roof and Ceiling (50 ksi steel)[a, b]

MEMBER DESIGNATION	GROUND SNOW LOAD (20 psf)					GROUND SNOW LOAD (30 psf)				
	Building width[c] (feet)					Building width[c] (feet)				
	24	28	32	36	40	24	28	32	36	40
2-350S162-33	2′-4″	—	—	—	—	2′-3″	—	—	—	—
2-350S162-43	3′-4″	2′-11″	2′-6″	2′-1″	—	3′-3″	2′-10″	2′-5″	2′-0″	—
2-350S162-54	4′-4″	3′-10″	3′-5″	3′-1″	2′-9″	4′-3″	2′-9″	3′-4″	3′-0″	2′-8″
2-350S162-68	5′-0″	4′-9″	4′-7″	4′-2″	3′-9″	4′-11″	4′-8″	4′-6″	4′-1″	3′-9″
2-350S162-97	5′-6″	5′-3″	5′-1″	4′-11″	2′-9″	5′-5″	5′-2″	5′-0″	4′-10″	4′-8″
2-550S162-33	3′-6″	2′-11″	2′-4″	—	—	3′-5″	2′-10″	2′-3″	—	—
2-550S162-43	5′-0″	4′-5″	3′-11″	3′-5″	3′-0″	4′-11″	4′-4″	3′-10″	3′-4″	2′-11″
2-550S162-54	6′-6″	5′-10″	5′-3″	4′-9″	4′-4″	6′-4″	5′-9″	5′-2″	4′-8″	4′-3″
2-550S162-68	7′-2″	6′-10″	6′-5″	5′-11″	5′-6″	7′-0″	6′-9″	6′-4″	5′-10″	5′-4″
2-550S162-97	7′-11″	7′-7″	7′-3″	7′-0″	6′-10″	7′-9″	7′-5″	7′-2″	6′-11″	6′-9″
2-800S162-33	2′-5″	2′-2″	1′-11″	1′-9″	—	2′-5″	2′-1″	1′-10″	1′-8″	—
2-800S162-43	5′-5″	4′-9″	4′-3″	3′-9″	3′-5″	5′-3″	4′-8″	4′-1″	3′-9″	3′-5″
2-800S162-54	7′-6″	6′-9″	6′-2″	5′-7″	5′-0″	7′-5″	6′-8″	6′-0″	5′-5″	4′-11″
2-800S162-68	9′-3″	8′-5″	7′-8″	7′-1″	6′-6″	9′-1″	8′-3″	7′-7″	7′-0″	6′-5″
2-800S162-97	10′-9″	10′-3″	9′-11″	9′-7″	9′-3″	10′-7″	10′-1″	9′-9″	9′-5″	9′-1″
2-1000S162-43	4′-4″	3′-9″	3′-4″	3′-0″	2′-9″	4′-3″	3′-8″	3′-3″	2′-11″	2′-8″
2-1000S162-54	8′-6″	7′-6″	6′-8″	6′-0″	5′-5″	8′-4″	7′-4″	6′-6″	5′-10″	5′-4″
2-1000S162-68	10′-6″	9′-7″	8′-9″	8′-0″	7′-5″	10′-4″	9′-5″	8′-7″	7′-11″	7′-3″
2-1000S162-97	12′-11″	12′-4″	11′-8″	11′-1″	10′-6″	12′-9″	12′-2″	11′-6″	10′-11″	10′-5″
2-1200S162-54	7′-1″	6′-2″	5′-6″	5′-0″	4′-6″	6′-11″	6′-1″	5′-5″	4′-10″	4′-5″
2-1200S162-68	11′-7″	10′-7″	9′-8″	8′-11″	8′-2″	11′-5″	10′-5″	9′-6″	8′-9″	8′-0″
2-1200S162-97	14′-9″	13′-9″	13′-0″	12′-4″	11′-9″	14′-7″	13′-8″	12′-10″	12′-3″	11′-8″

For SI: 1 inch = 25.4 mm, 1 foot = 304.8 mm, 1 pound per square foot = 0.0479kPa, 1 pound per square inch = 6.895kPa.

a. Deflection criterion: $L/360$ for live loads, $L/240$ for total loads.

b. Design load assumptions:
Second floor dead load is 10 psf.
Roof/ceiling dead load is 12 psf.
Second floor live load is 30 psf.
Attic live load is 10 psf.

c. Building width is in the direction of horizontal framing members supported by the header.

TABLE 603.6(7)
BOX-BEAM HEADER SPANS
Headers Supporting One Floor, Roof and Ceiling (33 ksi steel)[a, b]

MEMBER DESIGNATION	GROUND SNOW LOAD (50 psf)					GROUND SNOW LOAD (70 psf)				
	Building width[c] (feet)					Building width[c] (feet)				
	24	28	32	36	40	24	28	32	36	40
2-350S162-33	—	—	—	—	—	—	—	—	—	—
2-350S162-43	—	—	—	—	—	—	—	—	—	—
2-350S162-54	—	—	—	—	—	—	—	—	—	—
2-350S162-68	2′-8″	2′-3″	—	—	—	—	—	—	—	—
2-350S162-97	4′-0″	3′-7″	3′-3″	2′-11″	2′-7″	3′-4″	2′-11″	2′-6″	2′-2″	—
2-550S162-33	—	—	—	—	—	—	—	—	—	—
2-550S162-43	2′-0″	—	—	—	—	—	—	—	—	—
2-550S162-54	3′-1″	2′-6″	—	—	—	—	—	—	—	—
2-550S162-68	4′-1″	3′-6″	2′-11″	2′-5″	—	3′-1″	2′-5″	—	—	—
2-550S162-97	5′-10″	5′-3″	4′-10″	4′-5″	4′-0″	4′-11″	4′-5″	3′-11″	3′-6″	3′-2″
2-800S162-33	—	—	—	—	—	—	—	—	—	—
2-800S162-43	2′-6″	—	—	—	—	—	—	—	—	—
2-800S162-54	4′-0″	3′-3″	2′-6″	—	—	2′-8″	—	—	—	—
2-800S162-68	5′-5″	4′-8″	4′-0″	3′-4″	2′-8″	4′-2″	3′-4″	2′-6″	—	—
2-800S162-97	7′-9″	7′-1″	6′-6″	5′-11″	5′-5″	6′-7″	5′-11″	5′-4″	4′-10″	4′-4″
2-1000S162-43	2′-10″	—	—	—	—	—	—	—	—	—
2-1000S162-54	4′-7″	3′-8″	2′-9″	—	—	3′-0″	—	—	—	—
2-1000S162-68	6′-2″	5′-4″	4′-7″	3′-10″	3′-1″	4′-9″	3′-10″	2′-11″	—	—
2-1000S162-97	9′-3″	8′-5″	7′-8″	7′-1″	6′-6″	7′-10″	7′-1″	6′-5″	5′-9″	5′-2″
2-1200S162-54	5′-0″	4′-0″	3′-1″	—	—	3′-4″	—	—	—	—
2-1200S162-68	6′-10″	5′-11″	5′-0″	4′-3″	3′-5″	5′-3″	4′-3″	3′-2″	—	—
2-1200S162-97	10′-5″	9′-6″	8′-8″	8′-0″	7′-4″	8′-10″	8′-0″	7′-3″	6′-6″	5′-10″

For SI: 1 inch = 25.4 mm, 1 foot = 304.8 mm, 1 pound per square foot = 0.0479kPa, 1 pound per square inch = 6.895kPa.

a. Deflection criterion: *L*/360 for live loads, *L*/240 for total loads.

b. Design load assumptions:
Second floor dead load is 10 psf.
Roof/ceiling dead load is 12 psf.
Second floor live load is 30 psf.
Attic live load is 10 psf.

c. Building width is in the direction of horizontal framing members supported by the header.

TABLE 603.6(8)
BOX-BEAM HEADER SPANS
Headers Supporting One Floor, Roof and Ceiling (50 ksi steel)[a, b]

MEMBER DESIGNATION	GROUND SNOW LOAD (50 psf)					GROUND SNOW LOAD (70 psf)				
	Building width[c] (feet)					Building width[c] (feet)				
	24	28	32	36	40	24	28	32	36	40
2-350S162-33	—	—	—	—	—	—	—	—	—	—
2-350S162-43	2′-8″	—	—	—	—	—	—	—	—	—
2-350S162-54	3′-5″	3′-0″	2′-7″	2′-2″	—	2′-8″	2′-2″	—	—	—
2-350S162-68	4′-6″	4′-1″	3′-8″	3′-3″	2′-11″	3′-9″	3′-3″	2′-10″	2′-5″	2′-1″
2-350S162-97	5′-1″	4′-10″	4′-8″	4′-6″	4′-5″	4′-10″	4′-7″	4′-4″	4′-0″	3′-8″
2-550S162-33	2′-4″	—	—	—	—	—	—	—	—	—
2-550S162-43	3′-10″	3′-4″	2′-9″	2′-3″	—	2′-11″	2′-3″	—	—	—
2-550S162-54	5′-3″	3′-8″	4′-1″	3′-8″	3′-2″	4′-3″	3′-8″	3′-1″	2′-7″	2′-0″
2-550S162-68	6′-5″	5′-10″	5′-3″	4′-9″	4′-4″	5′-5″	4′-9″	4′-3″	3′-9″	3′-4″
2-550S162-97	7′-4″	7′-0″	6′-9″	6′-6″	6′-4″	6′-11″	6′-8″	6′-3″	5′-10″	5′-5″
2-800S162-33	1′-11″	1′-8″	—	—	—	—	—	—	—	—
2-800S162-43	4′-2″	3′-8″	3′-4″	2′-9″	2′-2″	3′-5″	2′-9″	—	—	—
2-800S162-54	6′-1″	5′-5″	4′-10″	4′-3″	3′-9″	4′-11″	4′-3″	3′-8″	3′-0″	2′-5″
2-800S162-68	7′-8″	6′-11″	6′-3″	5′-9″	5′-2″	6′-5″	5′-9″	5′-1″	4′-6″	4′-0″
2-800S162-97	9′-11″	9′-6″	9′-2″	8′-10″	8′-3″	9′-5″	8′-10″	8′-2″	7′-7″	7′-0″
2-1000S162-43	3′-4″	2′-11″	2′-7″	2′-5″	2′-2″	2′-8″	2′-5″	2′-2″	—	—
2-1000S162-54	6′-7″	5′-10″	5′-3″	4′-9″	4′-3″	5′-4″	4′-9″	4′-1″	3′-5″	2′-9″
2-1000S162-68	8′-8″	7′-10″	7′-2″	6′-6″	5′-11″	7′-4″	6′-6″	5′-9″	5′-1″	4′-6″
2-1000S162-97	11′-7″	10′-11″	10′-3″	9′-7″	9′-0″	10′-5″	9′-7″	8′-10″	8′-2″	7′-8″
2-1200S162-54	5′-6″	4′-10″	4′-4″	3′-11[2]	3′-7″	4′-5″	3′-11″	3′-6″	3′-2″	2′-11″
2-1200S162-68	9′-7″	8′-8″	7′-11″	7′-2″	6′-6″	8′-1″	7′-2″	6′-4″	5′-8″	5′-0″
2-1200S162-97	12′-11″	12′-2″	11′-6″	10′-8″	10′-0″	11′-8″	10′-9″	9′-11″	9′-2″	8′-6″

For SI: 1 inch = 25.4 mm, 1 foot = 304.8 mm, 1 pound per square foot = 0.0479kPa, 1 pound per square inch = 6.895kPa.

a. Deflection criterion: *L*/360 for live loads, *L*/240 for total loads.

b. Design load assumptions:
Second floor dead load is 10 psf.
Roof/ceiling dead load is 12 psf.
Second floor live load is 30 psf.
Attic live load is 10 psf.

c. Building width is in the direction of horizontal framing members supported by the header.

TABLE 603.6(9)
BOX-BEAM HEADER SPANS
Headers Supporting Two Floors, Roof and Ceiling (33 ksi steel)[a]

MEMBER DESIGNATION	GROUND SNOW LOAD (20 psf)					GROUND SNOW LOAD (30 psf)				
	Building width[c] (feet)					Building width[c] (feet)				
	24	28	32	36	40	24	28	32	36	40
2-350S162-33	—	—	—	—	—	—	—	—	—	—
2-350S162-43	—	—	—	—	—	—	—	—	—	—
2-350S162-54	—	—	—	—	—	—	—	—	—	—
2-350S162-68	—	—	—	—	—	—	—	—	—	—
2-350S162-97	3′-1″	2′-8″	2′-3″	—	—	3′-1″	2′-7″	2′-2″	—	—
2-550S162-33	—	—	—	—	—	—	—	—	—	—
2-550S162-43	—	—	—	—	—	—	—	—	—	—
2-550S162-54	—	—	—	—	—	—	—	—	—	—
2-550S162-68	2′-9″	—	—	—	—	2′-8″	—	—	—	—
2-550S162-97	4′-8″	4′-1″	3′-7″	3′-2″	2′-9″	4′-7″	4′-0″	3′-6″	3′-1″	2′-8″
2-800S162-33	—	—	—	—	—	—	—	—	—	—
2-800S162-43	—	—	—	—	—	—	—	—	—	—
2-800S162-54	2′-1″	—	—	—	—	—	—	—	—	—
2-800S162-68	3′-8″	2′-9″	—	—	—	3′-7″	2′-8″	—	—	—
2-800S162-97	6′-3″	5′-6″	4′-11″	4′-4″	3′-9″	6′-2″	5′-5″	4′-10″	4′-3″	3′-9″
2-1000S162-43	—	—	—	—	—	—	—	—	—	—
2-1000S162-54	2′-5″	—	—	—	—	2′-3″	—	—	—	—
2-1000S162-68	4′-3″	3′-2″	2′-0″	—	—	4′-2″	3′-1″	—	—	—
2-1000S162-97	7′-5″	6′-7″	5′-10″	5′-2″	4′-7″	7′-4″	6′-6″	5′-9″	5′-1″	4′-6″
2-1200S162-54	2′-7″	—	—	—	—	2′-6″	—	—	—	—
2-1200S162-68	4′-8″	3′-6″	2′-2″	—	—	4′-7″	3′-5″	2′-0″	—	—
2-1200S162-97	8′-5″	7′-5″	6′-7″	5′-10″	5′-2″	8′-3″	7′-4″	6′-6″	5′-9″	5′-1″

For SI: 1 inch = 25.4 mm, 1 foot = 304.8 mm, 1 pound per square foot = 0.0479kPa, 1 pound per square inch = 6.895kPa.

a. Deflection criterion: *L*/360 for live loads, *L*/240 for total loads.

b. Design load assumptions:
Second floor dead load is 10 psf.
Roof/ceiling dead load is 12 psf.
Second floor live load is 40 psf.
Third floor live load is 30 psf.
Attic live load is 10 psf.

c. Building width is in the direction of horizontal framing members supported by the header.

TABLE 603.6(10)
BOX-BEAM HEADER SPANS
Headers Supporting Two Floors, Roof and Ceiling (50 ksi steel)[a, b]

MEMBER DESIGNATION	GROUND SNOW LOAD (20 psf)					GROUND SNOW LOAD (30 psf)				
	Building widthc (feet)					Building widthc (feet)				
	24	28	32	36	40	24	28	32	36	40
2-350S162-33	—	—	—	—	—	—	—	—	—	—
2-350S162-43	—	—	—	—	—	—	—	—	—	—
2-350S162-54	2’-5”	—	—	—	—	2’-4”	—	—	—	—
2-350S162-68	3’-6”	3’-0”	2’-6”	2’-1”	—	3’-5”	2’-11”	2’-6”	2’-0”	—
2-350S162-97	4’-9”	4’-6”	4’-1”	3’-8”	3’-4”	4’-8”	4’-5”	4’-0”	3’-8”	3’-4”
2-550S162-33	—	—	—	—	—	—	—	—	—	—
2-550S162-43	2’-7”	—	—	—	—	2’-6”	—	—	—	—
2-550S162-54	3’-11”	3’-3”	2’-8”	2’-0”	—	3’-10”	3’-3”	2’-7”	—	—
2-550S162-68	5’-1”	4’-5”	3’-10”	3’-3”	2’-9”	5’-0”	4’-4”	3’-9”	3’-3”	2’-9”
2-550S162-97	6’-10”	6’-5”	5’-10”	5’-5”	4’-11”	6’-9”	6’-4”	5’-10”	5’-4”	4’-11”
2-800S162-33	—	—	—	—	—	—	—	—	—	—
2-800S162-43	3’-1”	2’-3”	—	—	—	3’-0”	2’-2”	—	—	—
2-800S162-54	4’-7”	3’-10”	3’-1”	2’-5”	—	4’-6”	3’-9”	3’-0”	2’-4”	—
2-800S162-68	6’-0”	5’-3”	4’-7”	3’-11”	3’-4”	6’-0”	5’-2”	4’-6”	3’-11”	3’-3”
2-800S162-97	9’-2”	8’-4”	7’-8”	7’-0”	6’-6”	9’-1”	8’-3”	7’-7”	7’-0”	6’-5”
2-1000S162-43	2’-6”	2’-2”	—	—	—	2’-6”	2’-2”	—	—	—
2-1000S162-54	5’-0”	4’-4”	3’-6”	2’-9”	—	4’-11”	4’-3”	3’-5”	2’-7”	—
2-1000S162-68	6’-10”	6’-0”	5’-3”	4’-6”	3’-10”	6’-9”	5’-11”	5’-2”	4’-5”	3’-9”
2-1000S162-97	10’-0”	9’-1”	8’-3”	7’-8”	7’-0”	9’-10”	9’-0”	8’-3”	7’-7”	7’-0”
2-1200S162-54	4’-2”	3’-7”	3’-3”	2’-11”	—	4’-1”	3’-7”	3’-2”	2’-10”	—
2-1200S162-68	7’-7”	6’-7”	5’-9”	5’-0”	4’-2”	7’-6”	6’-6”	5’-8”	4’-10”	4’-1”
2-1200S162-97	11’-2”	10’-1”	9’-3”	8’-6”	7’-10”	11’-0”	10’-0”	9’-2”	9’-2”	7’-9”

For SI: 1 inch = 25.4 mm, 1 foot = 304.8 mm, 1 pound per square foot = 0.0479kPa, 1 pound per square inch = 6.895kPa.

a. Deflection criterion: *L*/360 for live loads, *L*/240 for total loads.

b. Design load assumptions:
Second floor dead load is 10 psf.
Roof/ceiling dead load is 12 psf.
Second floor live load is 40 psf.
Third floor live load is 30 psf.
Attic live load is 10 psf.

c. Building width is in the direction of horizontal framing members supported by the header.

TABLE 603.6(11)
BOX-BEAM HEADER SPANS
Headers Supporting Two Floors, Roof and Ceiling (33 ksi steel)[a, b]

MEMBER DESIGNATION	GROUND SNOW LOAD (50 psf)					GROUND SNOW LOAD (70 psf)				
	Building width[c] (feet)					Building width[c] (feet)				
	24	28	32	36	40	24	28	32	36	40
2-350S162-33	—	—	—	—	—	—	—	—	—	—
2-350S162-43	—	—	—	—	—	—	—	—	—	—
2-350S162-54	—	—	—	—	—	—	—	—	—	—
2-350S162-68	—	—	—	—	—	—	—	—	—	—
2-350S162-97	2′-11″	2′-5″	2′-0″	—	—	2′-7″	2′-2″	—	—	—
2-550S162-33	—	—	—	—	—	—	—	—	—	—
2-550S162-43	—	—	—	—	—	—	—	—	—	—
2-550S162-54	—	—	—	—	—	—	—	—	—	—
2-550S162-68	2′-5″	—	—	—	—	—	—	—	—	—
2-550S162-97	4′-4″	3′-10″	3′-4″	2′-10″	2′-5″	4′-0″	3′-6″	3′-1″	2′-7″	2′-2″
2-800S162-33	—	—	—	—	—	—	—	—	—	—
2-800S162-43	—	—	—	—	—	—	—	—	—	—
2-800S162-54	—	—	—	—	—	—	—	—	—	—
2-800S162-68	3′-3″	2′-3″	—	—	—	2′-8″	—	—	—	—
2-800S162-97	5′-11″	5′-2″	4′-6″	4′-0″	3′-5″	5′-6″	4′-10″	4′-3″	3′-8″	3′-2″
2-1000S162-43	—	—	—	—	—	—	—	—	—	—
2-1000S162-54	—	—	—	—	—	—	—	—	—	—
2-1000S162-68	3′-9″	2′-7″	—	—	—	3′-1″	—	—	—	—
2-1000S162-97	7′-0″	6′-2″	5′-5″	4′-9″	4′-2″	6′-6″	5′-9″	5′-1″	4′-5″	3′-10″
2-1200S162-54	—	—	—	—	—	—	—	—	—	—
2-1200S162-68	4′-2″	2′-10″	—	—	—	3′-5″	2′-0″	—	—	—
2-1200S162-97	7′-11″	7′-0″	6′-2″	5′-5″	4′-8″	7′-4″	6′-6″	5′-9″	5′-0″	4′-4″

For SI: 1 inch = 25.4 mm, 1 foot = 304.8 mm, 1 pound per square foot = 0.0479kPa, 1 pound per square inch = 6.895kPa.
a. Deflection criterion: *L*/360 for live loads, *L*/240 for total loads.
b. Design load assumptions:
Second floor dead load is 10 psf.
Roof/ceiling dead load is 12 psf.
Second floor live load is 40 psf.
Third floor live load is 30 psf.
Attic live load is 10 psf.
c. Building width is in the direction of horizontal framing members supported by the header.

TABLE 603.6(12)
BOX-BEAM HEADER SPANS[a,b,c]
Headers Supporting Two Floors, Roof and Ceiling (50 ksi steel)[a,b]

MEMBER DESIGNATION	GROUND SNOW LOAD (50 psf)					GROUND SNOW LOAD (70 psf)				
	Building width[c] (feet)					Building width[c] (feet)				
	24	28	32	36	40	24	28	32	36	40
2-350S162-33	—	—	—	—	—	—	—	—	—	—
2-350S162-43	—	—	—	—	—	—	—	—	—	—
2-350S162-54	2′-2″	—	—	—	—	—	—	—	—	—
2-350S162-68	3′-3″	2′-9″	2′-3″	—	—	2′-11″	2′-5″	—	—	—
2-350S162-97	4′-6″	4′-3″	3′-10″	3′-6″	3′-2″	4′-3″	4′-0″	3′-7″	3′-3″	3′-0″
2-550S162-33	—	—	—	—	—	—	—	—	—	—
2-550S162-43	2′-3″	—	—	—	—	—	—	—	—	—
2-550S162-54	3′-7″	2′-11″	2′-3″	—	—	3′-3″	2′-7″	—	—	—
2-550S162-68	4′-9″	2′-1″	3′-6″	3′-0″	2′-5″	4′-4″	3′-9″	3′-2″	2′-8″	2′-1″
2-550S162-97	6′-5″	6′-1″	5′-7″	5′-1″	4′-8″	6′-3″	5′-10″	5′-4″	4′-10″	4′-5″
2-800S162-33	—	—	—	—	—	—	—	—	—	—
2-800S162-43	2′-8″	—	—	—	—	2′-2″	—	—	—	—
2-800S162-54	4′-3″	3′-5″	2′-8″	—	—	3′-9″	3′-0″	2′-3″	—	—
2-800S162-68	5′-8″	4′-11″	4′-2″	3′-7″	2′-11″	5′-3″	4′-6″	3′-10″	3′-3″	2′-7″
2-800S162-97	8′-9″	8′-0″	7′-3″	6′-8″	6′-2″	8′-4″	7′-7″	6′-11″	6′-4″	5′-10″
2-1000S162-43	2′-4″	2′-0″	—	—	—	2′-2″	—	—	—	—
2-1000S162-54	4′-8″	3′-11″	3′-1″	2′-2″	—	4′-3″	3′-5″	2′-7″	—	—
2-1000S162-68	6′-5″	5′-7″	4′-9″	4′-1″	3′-4″	5′-11″	5′-1″	4′-5″	3′-8″	2′-11″
2-1000S162-97	9′-6″	8′-8″	7′-11″	7′-3″	6′-8″	9′-0″	8′-3″	7′-6″	6′-11″	6′-4″
2-1200S162-54	3′-11″	3′-5″	3′-0″	2′-4″	—	3′-7″	3′-2″	2′-10″	—	—
2-1200S162-68	7′-1″	6′-2″	5′-3″	4′-6″	3′-8″	6′-6″	5′-8″	4′-10″	4′-0″	3′-3″
2-1200S162-97	10′-8″	9′-8″	8′-10″	8′-1″	7′-5″	10′-1″	9′-2″	8′-5″	7′-9″	7′-1″

For SI: 1 inch = 25.4 mm, 1 foot = 304.8 mm, 1 pound per square foot = 0.0479kPa, 1 pound per square inch = 6.895kPa.

a. Deflection criterion: *L*/360 for live loads, *L*/240 for total loads.

b. Design load assumptions:
Second floor dead load is 10 psf.
Roof/ceiling dead load is 12 psf.
Second floor live load is 40 psf.
Third floor live load is 30 psf.
Attic live load is 10 psf.

c. Building width is in the direction of horizontal framing members supported by the header.

TABLE 603.6(13)
BACK-TO-BACK HEADER SPANS
Headers Supporting Roof and Ceiling Only (33 ksi steel)[a,b]

MEMBER DESIGNATION	GROUND SNOW LOAD (20 psf)					GROUND SNOW LOAD (30 psf)				
	Building width[c] (feet)					Building width[c] (feet)				
	24	28	32	36	40	24	28	32	36	40
2-350S162-33	2′-11″	2′-4″	—	—	—	2′-5″	—	—	—	—
2-350S162-43	4′-8″	3′-10″	3′-5″	3′-1″	2′-9″	3′-11″	3′-5″	3′-0″	2′-8″	2′-4″
2-350S162-54	5′-3″	4′-9″	4′-4″	4′-1″	3′-8″	4′-10″	4′-4″	4′-0″	3′-8″	3′-4″
2-350S162-68	6′-1″	5′-7″	5′-2″	4′-10″	4′-6″	5′-8″	5′-3″	4′-10″	4′-6″	4′-2″
2-350S162-97	7′-3″	6′-10″	6′-5″	6′-0″	5′-8″	6′-11″	6′-5″	6′-0″	5′-8″	5′-4″
2-550S162-33	4′-5″	3′-9″	3′-1″	2′-6″	—	3′-9″	3′-2″	2′-6″	—	—
2-550S162-43	6′-2″	5′-7″	5′-0″	4′-7″	4′-2″	5′-7″	5′-0″	4′-6″	4′-1″	3′-8″
2-550S162-54	7′-5″	6′-9″	6′-3″	5′-9″	5′-4″	6′-10″	6′-3″	5′-9″	5′-4″	4′-11″
2-550S162-68	6′-7″	7′-11″	7′-4″	6′-10″	6′-5″	8′-0″	7′-4″	6′-10″	6′-5″	6′-0″
2-550S162-97	10′-5″	9′-8″	9′-0″	8′-6″	8′-0″	9′-9″	9′-0″	8′-6″	8′-0″	7′-7″
2-800S162-33	4′-5″	3′-11″	3′-5″	3′-1″	2′-4″	3′-11″	3′-6″	3′-0″	2′-3″	—
2-800S162-43	7′-7″	6′-10″	6′-2″	5′-8″	5′-2″	6′-11″	6′-2″	5′-7″	5′-1″	4′-7″
2-800S162-54	9′-3″	8′-7″	7′-11″	7′-4″	6′-10″	8′-8″	7′-11″	7′-4″	6′-9″	6′-3″
2-800S162-68	10′-7″	9′-10″	9′-4″	8′-10″	8′-5″	9′-11″	9′-4″	8′-10″	8′-4″	7′-11″
2-800S162-97	13′-9″	12′-9″	12′-0″	11′-3″	10′-8″	12′-10″	12′-0″	11′-3″	10′-7″	10′-0″
2-1000S162-43	7′-10″	6′-10″	6′-1″	5′-6″	5′-0″	6′-11″	6′-1″	5′-5″	4′-11″	4′-6″
2-1000S162-54	10′-5″	9′-9″	9′-0″	8′-4″	7′-9″	9′-10″	9′-0″	8′-4″	7′-9″	7′-2″
2-1000S162-68	12′-1″	11′-3″	10′-8″	10′-1″	9′-7″	11′-4″	10′-8″	10′-1″	9′-7″	9′-1″
2-1000S162-97	15′-3″	14′-3″	13′-5″	12′-9″	12′-2″	14′-4″	13′-5″	12′-8″	12′-1″	11′-6″
2-1200S162-54	11′-6″	10′-9″	10′-0″	9′-0″	8′-2″	10′-10″	10′-0″	9′-0″	8′-1″	7′-4″
2-1200S162-68	13′-4″	12′-6″	11′-9″	11′-2″	10′-8″	12′-7″	11′-10″	11′-2″	10′-7″	10′-1″
2-1200S162-97	16′-8″	15′-7″	14′-8″	13′-11″	13′-3″	15′-8″	14′-8″	13′-11″	13′-2″	12′-7″

For SI: 1 inch = 25.4 mm, 1 foot = 304.8 mm, 1 pound per square foot = 0.0479kPa, 1 pound per square inch = 6.895kPa.

a. Deflection criterion: *L*/360 for live loads, *L*/240 for total loads.

b. Design load assumptions:
Second floor dead load is 12 psf.
Attic live load is 10 psf.

c. Building width is in the direction of horizontal framing members supported by header.

TABLE 603.6(14)
BACK-TO-BACK HEADER SPANS
Headers Supporting Roof and Ceiling Only (50 ksi steel)[a,b]

MEMBER DESIGNATION	GROUND SNOW LOAD (20 psf)					GROUND SNOW LOAD (30 psf)				
	Building width[c] (feet)					Building width[c] (feet)				
	24	28	32	36	40	24	28	32	36	40
2-350S162-33	4′-2″	3′-8″	3′-3″	2′-10″	2′-6″	3′-8″	3′-3″	2′-10″	2′-5″	2′-1″
2-350S162-43	5′-5″	5′-0″	4′-6″	4′-2″	3′-10″	5′-0″	4′-7″	4′-2″	3′-10″	3′-6″
2-350S162-54	6′-2″	5′-10″	5′-8″	5′-4″	5′-0″	5′-11″	5′-8″	5′-4″	5′-0″	4′-8″
2-350S162-68	6′-7″	6′-3″	6′-0″	5′-10″	5′-8″	6′-4″	6′-1″	5′-10″	5′-8″	5′-6″
2-350S162-97	7′-3″	6′-11″	6′-8″	6′-5″	6′-3″	7′-0″	6′-8″	6′-5″	6′-3″	6′-0″
2-550S162-33	5′-10″	5′-3″	4′-8″	4′-3″	3′-9″	5′-3″	4′-9″	4′-2″	3′-9″	3′-3″
2-550S162-43	7′-9″	7′-2″	6′-7″	6′-1″	5′-8″	7′-3″	6′-7″	6′-1″	5′-8″	5′-3″
2-550S162-54	8′-9″	8′-5″	8′-1″	7′-9″	7′-5″	8′-6″	8′-1″	7′-9″	7′-5″	6′-11″
2-550S162-68	9′-5″	9′-0″	8′-8″	8′-4″	8′-1″	9′-1″	8′-8″	8′-4″	8′-1″	7′-10″
2-550S162-97	10′-5″	10′-0″	9′-7″	9′-3″	9′-0″	10′-0″	9′-7″	9′-3″	8′-11″	8′-8″
2-800S162-33	4′-5″	3′-11″	3′-5″	3′-1″	2′-10″	3′-11″	3′-6″	3′-1″	2′-9″	2′-6″
2-800S162-43	9′-1″	8′-5″	7′-8″	6′-11″	6′-3″	8′-6″	7′-8″	6′-10″	6′-2″	5′-8″
2-800S162-54	10′-10″	10′-2″	9′-7″	9′-1″	8′-8″	10′-2″	9′-7″	9′-0″	8′-7″	8′-1″
2-800S162-68	12′-8″	11′-10″	11′-2″	10′-7″	10′-1″	11′-11″	11′-2″	10′-7″	10′-0″	9′-7″
2-800S162-97	14′-2″	13′-6″	13′-0″	12′-7″	12′-2″	13′-8″	13′-1″	12′-7″	12′-2″	11′-9″
2-1000S162-43	7′-10″	6′-10″	6′-1″	5′-6″	5′-0″	6′-11″	6′-1″	5′-5″	4′-11″	4′-6″
2-1000S162-54	12′-3″	11′-5″	10′-9″	10′-3″	9′-9″	11′-6″	10′-9″	10′-2″	9′-8″	8′-11″
2-1000S162-68	14′-5″	13′-5″	12′-8″	12′-0″	11′-6″	13′-6″	12′-8″	12′-0″	11′-5″	10′-11″
2-1000S162-97	17′-1″	16′-4″	15′-8″	14′-11″	14′-3″	16′-5″	15′-9″	14′-10″	14′-1″	13′-6″
2-1200S162-54	12′-11″	11′-3″	10′-0″	9′-0″	8′-2″	11′-5″	10′-0″	9′-0″	8′-1″	7′-4″
2-1200S162-68	15′-11″	14′-10″	14′-0″	13′-4″	12′-8″	15′-0″	14′-0″	13′-3″	12′-7″	12′-0″
2-1200S162-97	19′-11″	18′-7″	17′-6″	16′-8″	15′-10″	18′-9″	17′-7″	16′-7″	15′-9″	15′-0″

For SI: 1 inch = 25.4 mm, 1 foot = 304.8 mm, 1 pound per square foot = 0.0479kPa, 1 pound per square inch = 6.895kPa.

a. Deflection criterion: $L/360$ for live loads, $L/240$ for total loads.

b. Design load assumptions:
Roof/ceiling dead load is 12 psf.
Attic live load is 10 psf.

c. Building width is in the direction of horizontal framing members supported by the header.

TABLE 603.6(15)
BACK-TO-BACK HEADER SPANS
Headers Supporting Roof and Ceiling Only (33 ksi steel)[a, b]

MEMBER DESIGNATION	GROUND SNOW LOAD (50 psf)					GROUND SNOW LOAD (70 psf)				
	Building width[c] (feet)					Building width[c] (feet)				
	24	28	32	36	40	24	28	32	36	40
2-350S162-33	—	—	—	—	—	—	—	—	—	—
2-350S162-43	2′-6″	—	—	—	—	—	—	—	—	—
2-350S162-54	3′-6″	3′-1″	2′-8″	2′-4″	2′-0″	2′-7″	2′-1″	—	—	—
2-350S162-68	4′-4″	3′-11″	3′-7″	3′-3″	2′-11″	3′-5″	3′-0″	2′-8″	2′-4″	2′-1″
2-350S162-97	5′-5″	5′-0″	4′-8″	4′-6″	4′-1″	4′-6″	4′-2″	3′-10″	3′-6″	3′-3″
2-550S162-33	—	—	—	—	—	—	—	—	—	—
2-550S162-43	3′-10″	3′-3″	2′-9″	2′-2″	—	2′-6″	—	—	—	—
2-550S162-54	5′-1″	4′-7″	4′-1″	3′-8″	3′-4″	3′-11″	3′-5″	2′-11″	2′-6″	2′-0″
2-550S162-68	6′-2″	5′-8″	5′-2″	4′-9″	4′-5″	5′-0″	4′-6″	4′-1″	3′-9″	3′-4″
2-550S162-97	7′-9″	7′-2″	6′-8″	6′-3″	5′-11″	6′-6″	6′-0″	5′-7″	5′-2″	4′-10″
2-800S162-33	—	—	—	—	—	—	—	—	—	—
2-800S162-43	4′-10″	4′-1″	3′-6″	2′-11″	2′-3″	3′-3″	2′-5″	—	—	—
2-800S162-54	6′-6″	5′-10″	5′-3″	4′-9″	4′-4″	5′-1″	4′-6″	3′-11″	3′-4″	2′-10″
2-800S162-68	8′-1″	7′-5″	6′-10″	6′-4″	5′-11″	6′-8″	6′-1″	5′-6″	5′-0″	4′-7″
2-800S162-97	10′-3″	9′-7″	8′-11″	8′-5″	7′-11″	8′-8″	8′-0″	7′-6″	7′-0″	6′-7″
2-1000S162-43	4′-8″	4′-1″	3′-8″	3′-4″	2′-8″	3′-6″	2′-10″	—	—	—
2-1000S162-54	7′-5″	6′-8″	6′-1″	5′-6″	5′-0″	5′-10″	5′-1″	4′-6″	3′-11″	3′-4″
2-1000S162-68	9′-4″	8′-7″	7′-11″	7′-4″	6′-10″	7′-8″	7′-0″	6′-4″	5′-10″	5′-4″
2-1000S162-97	11′-9″	11′-0″	10′-5″	9′-11″	9′-5″	10′-3″	9′-7″	8′-11″	8′-4″	7′-10″
2-1200S162-54	7′-8″	6′-9″	6′-1″	5′-6″	5′-0″	5′-10″	5′-1″	4′-7″	4′-1″	3′-9″
2-1200S162-68	10′-4″	9′-6″	8′-10″	8′-2″	7′-7″	8′-7″	7′-9″	7′-1″	6′-6″	6′-0″
2-1200S162-97	12′-10″	12′-1″	11′-5″	10′-10″	10′-4″	11′-2″	10′-6″	9′-11″	9′-5″	9′-0″

For SI: 1 inch = 25.4 mm, 1 foot = 304.8 mm, 1 pound per square foot = 0.0479kPa, 1 pound per square inch = 6.895kPa.

a. Deflection criterion: *L*/360 for live loads, *L*/240 for total loads.

b. Design load assumptions:
Roof/ceiling dead load is 12 psf.
Attic live load is 10 psf.

c. Building width is in the direction of horizontal framing members supported by the header.

TABLE 603.6(16)
BACK-TO-BACK HEADER SPANS
Headers Supporting Roof and Ceiling Only (50 ksi steel)[a, b]

MEMBER DESIGNATION	GROUND SNOW LOAD (50 psf)					GROUND SNOW LOAD (70 psf)				
	Building width[c] (feet)					Building width[c] (feet)				
	24	28	32	36	40	24	28	32	36	40
2-350S162-33	2′-3″	—	—	—	—	—	—	—	—	—
2-350S162-43	3′-8″	3′-3″	2′-10″	2′-6″	2′-2″	2′-8″	2′-3″	—	—	—
2-350S162-54	4′-9″	4′-4″	4′-0″	3′-8″	3′-8″	3′-10″	3′-5″	3′-1″	2′-9″	2′-5″
2-350S162-68	5′-7″	5′-4″	5′-2″	4′-11″	4′-7″	5′-1″	4′-8″	4′-3″	3′-11″	3′-8″
2-350S162-97	6′-2″	5′-11″	5′-8″	5′-6″	5′-4″	5′-8″	5′-5″	5′-3″	5′-0″	4′-11″
2-550S162-33	3′-6″	2′-10″	2′-3″	—	—	2′-0″	—	—	—	—
2-550S162-43	5′-5″	4′-10″	4′-4″	3′-11″	3′-6″	4′-2″	3′-8″	3′-2″	2′-8″	2′-3″
2-550S162-54	7′-2″	6′-6″	6′-0″	5′-7″	5′-2″	5′-10″	5′-3″	4′-10″	4′-5″	4′-0″
2-550S162-68	8′-0″	7′-8″	7′-3″	6′-11″	6′-6″	7′-2″	6′-7″	6′-1″	5′-8″	5′-4″
2-550S162-97	8′-11″	8′-6″	8′-2″	7′-11″	7′-8″	8′-1″	7′-9″	7′-6″	7′-2″	6′-11″
2-800S162-33	2′-8″	2′-4″	2′-1″	1′-11″	—	2′-0″	—	—	—	—
2-800S162-43	5′-10″	5′-2″	4′-7″	4′-2″	3′-10″	4′-5″	3′-11″	3′-6″	3′-2″	2′-9″
2-800S162-54	8′-4″	7′-8″	7′-1″	6′-7″	6′-1″	6′-10″	6′-3″	5′-8″	5′-2″	4′-9″
2-800S162-68	9′-9″	9′-2″	8′-8″	8′-3″	7′-10″	8′-6″	7′-11″	7′-4″	6′-10″	6′-5″
2-800S162-97	12′-1″	11′-7″	11′-2″	10′-8″	10′-2″	11′-0″	10′-4″	9′-9″	9′-3″	8′-10″
2-1000S162-43	4′-8″	4′-1″	2′-8″	3′-4″	3′-0″	3′-6″	10′-1″	2′-9″	2′-6″	2′-3″
2-1000S162-54	9′-3″	8′-2″	7′-3″	6′-7″	6′-0″	7′-0″	6′-2″	5′-6″	5′-0″	4′-6″
2-1000S162-68	11′-1″	10′-5″	9′-10″	9′-4″	8′-11″	9′-8″	9′-1″	8′-5″	7′-10″	7′-4″
2-1000S162-97	13′-9″	12′-11″	12′-2″	11′-7″	11′-1″	11′-11″	11′-3″	10′-7″	10′-1″	9′-7″
2-1200S162-54	7′-8″	6′-9″	6′-1″	5′-6″	5′-0″	5′-10″	5′-1″	4′-7″	4′-1″	3′-9″
2-1200S162-68	12′-3″	11′-6″	10′-11″	10′-4″	9′-11″	10′-8″	10′-0″	9′-2″	8′-4″	7′-7″
2-1200S162-97	15′-4″	14′-5″	13′-7″	12′-11″	12′-4″	13′-4″	12′-6″	11′-10″	11′-3″	10′-9″

For SI: 1 inch = 25.4 mm, 1 foot = 304.8 mm, 1 pound per square foot = 0.0479kPa, 1 pound per square inch = 6.895kPa.

a. Deflection criterion: *L*/360 for live loads, *L*/240 for total loads.

b. Design load assumptions:
Roof/ceiling dead load is 12 psf.
Attic live load is 10 psf.

c. Building width is in the direction of horizontal framing members supported by the header.

TABLE 603.6(17)
BACK-TO-BACK HEADER SPANS
Headers Supporting One Floor, Roof and Ceiling (33 ksi steel)[a, b]

MEMBER DESIGNATION	GROUND SNOW LOAD (20 psf)					GROUND SNOW LOAD (30 psf)				
	Building width[c] (feet)					Building width[c] (feet)				
	24	28	32	36	40	24	28	32	36	40
2-350S162-33	—	—	—	—	—	—	—	—	—	—
2-350S162-43	2′-2″	—	—	—	—	2′-1″	—	—	—	—
2-350S162-54	3′-3″	2′-9″	2′-5″	2′-0″	—	3′-2″	2′-9″	2′-4″	—	—
2-350S162-68	4′-4″	3′-8″	3′-3″	2′-11″	2′-8″	4′-0″	3′-7″	3′-2″	2′-11″	2′-7″
2-350S162-97	5′-2″	4′-9″	4′-4″	4′-1″	3′-9″	5′-1″	4′-8″	4′-4″	4′-0″	3′-9″
2-550S162-33	—	—	—	—	—	—	—	—	—	—
2-550S162-43	3′-6″	2′-10″	2′-3″	—	—	3′-5″	2′-9″	2′-2″	—	—
2-550S162-54	4′-9″	4′-2″	3′-9″	3′-3″	2′-10″	4′-8″	4′-1″	3′-8″	3′-2″	2′-9″
2-550S162-68	5′-10″	5′-3″	4′-10″	4′-5″	4′-1″	5′-9″	5′-3″	4′-9″	4′-4″	4′-0″
2-550S162-97	7′-4″	6′-9″	6′-4″	5′-11″	5′-6″	7′-3″	6′-9″	6′-3″	5′-10″	5′-5″
2-800S162-33	—	—	—	—	—	—	—	—	—	—
2-800S162-43	4′-4″	3′-8″	2′-11″	2′-3″	—	4′-3″	3′-6″	2′-10″	2′-1″	—
2-800S162-54	6′-1″	5′-5″	4′-10″	4′-4″	3′-10″	6′-0″	5′-4″	4′-9″	4′-3″	3′-9″
2-800S162-68	7′-8″	7′-0″	6′-5″	5′-11″	5′-5″	7′-7″	6′-11″	6′-4″	5′-10″	5′-4″
2-800S162-97	9′-10″	9′-1″	8′-5″	7′-11″	7′-5″	9′-8″	8′-11″	8′-4″	7′-10″	7′-4″
2-1000S162-43	4′-4″	3′-9″	3′-4″	2′-8″	—	4′-3″	3′-8″	3′-3″	2′-6″	—
2-1000S162-54	6′-11″	6′-2″	5′-6″	5′-0″	4′-5″	6′-10″	6′-1″	5′-5″	4′-10″	4′-4″
2-1000S162-68	8′-10″	8′-1″	7′-5″	6′-10″	6′-4″	8′-8″	7′-11″	7′-3″	6′-8″	6′-2″
2-1000S162-97	11′-3″	10′-7″	9′-11″	9′-5″	8′-10″	11′-2″	10′-5″	9′-10″	9′-3″	8′-9″
2-1200S162-54	7′-1″	6′-2″	5′-6″	5′-0″	4′-6″	6′-11″	6′-1″	5′-5″	4′-10″	4′-5″
2-1200S162-68	9′-10″	9′-0″	8′-3″	7′-7″	7′-0″	9′-8″	8′-10″	8′-111	7′-6″	6′-11″
2-1200S162-97	12′-4″	11′-7″	10′-11″	10′-4″	9′-10″	12′-3″	11′-5″	10′-9″	10′-3″	9′-9″

For SI: 1 inch = 25.4 mm, 1 foot = 304.8 mm, 1 pound per square foot = 0.0479kPa, 1 pound per square inch = 6.895kPa.

a. Deflection criterion: *L*/360 for live loads, *L*/240 for total loads.

b. Design load assumptions:
Second floor dead load is 10 psf.
Roof/ceiling dead load is 12 psf.
Second floor live load is 30 psf.
Attic live load is 10 psf.

c. Building width is in the direction of horizontal framing members supported by the header.

TABLE 603.6(18)
BACK-TO-BACK HEADER SPANS
Headers Supporting One Floor, Roof and Ceiling (50 ksi steel)[a, b]

MEMBER DESIGNATION	GROUND SNOW LOAD (20 psf)					GROUND SNOW LOAD (30 psf)				
	Building width[c] (feet)					Building width[c] (feet)				
	24	28	32	36	40	24	28	32	36	40
2-350S162-33	—	—	—	—	—	—	—	—	—	—
2-350S162-43	3′-4″	2′-11″	2′-6″	2′-2″	—	3′-3″	2′-10″	2′-5″	2′-1″	—
2-350S162-54	4′-6″	4′-1″	3′-8″	3′-4″	3′-0″	4′-5″	4′-0″	3′-7″	3′-3″	2′-11″
2-350S162-68	5′-0″	4′-9″	4′-7″	4′-5″	4′-3″	4′-11″	4′-8″	4′-6″	4′-4″	4′-2″
2-350S162-97	5′-6″	5′-3″	5′-1″	4′-11″	4′-9″	5′-5″	5′-2″	5′-0″	4′-10″	4′-8″
2-550S162-33	3′-1″	2′-5″	—	—	—	3′-0″	2′-3″	—	—	—
2-550S162-43	5′-1″	4′-6″	4′-0″	3′-6″	3′-1″	4′-11″	4′-5″	3′-11″	3′-5″	3′-0″
2-550S162-54	6′-8″	6′-2″	5′-7″	5′-2″	4′-9″	6′-6″	6′-0″	5′-6″	5′-1″	4′-8″
2-550S162-68	7′-2″	6′-10″	6′-7″	6′-4″	6′-1″	7′-0″	6′-9″	6′-6″	6′-3″	6′-0″
2-550S162-97	7′-11″	7′-7″	7′-3″	7′-0″	6′-10″	7′-9″	7′-5″	7′-2″	6′-11″	6′-9″
2-800S162-33	2′-5″	2′-2″	1′-11″	—	—	2′-5″	2′-1″	1′-10″	—	—
2-800S162-43	5′-5″	4′-9″	4′-3″	3′-9″	3′-5″	5′-3″	4′-8″	4′-1″	3′-9″	3′-5″
2-800S162-54	7′-11″	7′-2″	6′-7″	6′-1″	5′-7″	7′-9″	7′-1″	6′-6″	6′-0″	5′-6″
2-800S162-68	9′-5″	8′-9″	8′-3″	7′-9″	7′-4″	9′-3″	8′-8″	8′-2″	7′-8″	7′-3″
2-800S162-97	10′-9″	10′-3″	9′-11″	9′-7″	9′-3″	10′-7″	10′-1″	9′-9″	9′-5″	9′-1″
2-1000S162-43	4′-4″	3′-9″	3′-4″	3′-0″	2′-9″	4′-3″	3′-8″	3′-3″	2′-11″	2′-8″
2-1000S162-54	8′-6″	7′-5″	6′-8″	6′-0″	5′-5″	8′-4″	7′-4″	6′-6″	5′-10″	5′-4″
2-1000S162-68	10′-8″	10′-0″	9′-5″	8′-11″	8′-4″	10′-7″	9′-10″	9′-4″	8′-9″	8′-3″
2-1000S162-97	12′-11″	12′-4″	11′-8″	11′-1″	10′-6″	12′-9″	12′-2″	11′-6″	10′-11″	10′-5″
2-1200S162-54	7′-1″	6′-2″	5′-6″	5′-0″	4′-6″	6′-11″	6′-1″	5′-5″	4′-10″	4′-5″
2-1200S162-68	11′-9″	11′-0″	10′-5″	9′-10″	9′-1″	11′-8″	10′-11″	10′-3″	9′-9″	8′-11″
2-1200S162-97	14′-9″	13′-9″	13′-0″	12′-4″	11′-9″	14′-7″	13′-8″	12′-10″	12′-3″	11′-8″

For SI: 1 inch = 25.4 mm, 1 foot = 304.8 mm, 1 pound per square foot = 0.0479kPa, 1 pound per square inch = 6.895kPa.

a. Deflection criterion: *L*/360 for live loads, *L*/240 for total loads.

b. Design load assumptions:
Second floor dead load is 10 psf.
Roof/ceiling dead load is 12 psf.
Second floor live load is 30 psf.
Attic live load is 10 psf.

c. Building width is in the direction of horizontal framing members supported by the header.

TABLE 603.6(19)
BACK-TO-BACK HEADER SPANS
Headers Supporting One Floor, Roof and Ceiling (33 ksi steel)[a, b]

MEMBER DESIGNATION	GROUND SNOW LOAD (50 psf)					GROUND SNOW LOAD (70 psf)				
	Building width[c] (feet)					Building width[c] (feet)				
	24	28	32	36	40	24	28	32	36	40
2-350S162-33	—	—	—	—	—	—	—	—	—	—
2-350S162-43	—	—	—	—	—	—	—	—	—	—
2-350S162-54	2′-4″	—	—	—	—	—	—	—	—	—
2-350S162-68	3′-3″	2′-10″	2′-6″	2′-2″	—	2′-7″	2′-2″	—	—	—
2-350S162-97	4′-4″	4′-0″	3′-8″	3′-4″	3′-1″	3′-9″	3′-4″	3′-1″	2′-9″	2′-6″
2-550S162-33	—	—	—	—	—	—	—	—	—	—
2-550S162-43	2′-2″	—	—	—	—	—	—	—	—	—
2-550S162-54	3′-8″	3′-2″	2′-8″	2′-3″	—	2′-10″	2′-3″	—	—	—
2-550S162-68	4′-9″	4′-4″	3′-11″	3′-6″	3′-2″	4′-0″	3′-6″	3′-1″	2′-9″	2′-4″
2-550S162-97	6′-3″	5′-9″	5′-4″	5′-0″	4′-8″	5′-6″	5′-0″	4′-7″	4′-3″	3′-11″
2-800S162-33	—	—	—	—	—	—	—	—	—	—
2-800S162-43	2′-11″	2′-0″	—	—	—	—	—	—	—	—
2-800S162-54	4′-9″	4′-2″	3′-7″	3′-1″	2′-7″	3′-9″	3′-1″	2′-5″	—	—
2-800S162-68	6′-4″	5′-9″	5′-3″	4′-9″	4′-4″	5′-4″	4′-9″	4′-3″	3′-10″	3′-4″
2-800S162-97	8′-5″	7′-9″	7′-3″	6′-9″	6′-4″	7′-4″	6′-9″	6′-3″	5′-10″	5′-5″
2-1000S162-43	3′-4″	2′-5″	—	—	—	—	—	—	—	—
2-1000S162-54	5′-6″	4′-10″	4′-2″	3′-7″	3′-0″	4′-4″	3′-7″	2′-11″	2′-2″	—
2-1000S162-68	7′-4″	6′-8″	6′-1″	5′-7″	5′-1″	6′-3″	5′-7″	5′-0″	4′-5″	4′-0″
2-1000S162-97	9′-11″	8′-3″	8′-7″	8′-1″	7′-7″	8′-9″	8′-1″	7′-6″	7′-0″	6′-6″
2-1200S162-54	5′-6″	4′-10″	4′-4″	3′-11″	3′-5″	4′-5″	3′-11″	3′-3″	2′-6″	—
2-1200S162-68	8′-2″	7′-5″	6′-9″	6′-3″	5′-8″	6′-11″	6′-3″	5′-7″	5′-0″	4′-6″
2-1200S162-97	10′-10″	10′-2″	9′-8″	9′-2″	8′-7″	9′-9″	9′-2″	8′-6″	7′-11″	7′-5″

For SI: 1 inch = 25.4 mm, 1 foot = 304.8 mm, 1 pound per square foot = 0.0479kPa, 1 pound per square inch = 6.895kPa.

a. Deflection criterion: *L*/360 for live loads, *L*/240 for total loads.

b. Design load assumptions:
Second floor dead load is 10 psf.
Roof/ceiling dead load is 12 psf.
Second floor live load is 30 psf.
Attic live load is 10 psf.

c. Building width is in the direction of horizontal framing members supported by the header.

TABLE 603.6(20)
BACK-TO-BACK HEADER SPANS
Headers Supporting One Floor, Roof and Ceiling (50 ksi steel)[a, b]

MEMBER DESIGNATION	GROUND SNOW LOAD (50 psf)					GROUND SNOW LOAD (70 psf)				
	Building width[c] (feet)					Building width[c] (feet)				
	24	28	32	36	40	24	28	32	36	40
2-350S162-33	—	—	—	—	—	—	—	—	—	—
2-350S162-43	2′-6″	2′-0″	—	—	—	—	—	—	—	—
2-350S162-54	3′-8″	3′-3″	2′-11″	2′-7″	2′-3″	3′-0″	2′-7″	2′-2″	—	—
2-350S162-68	4′-7″	4′-5″	4′-1″	3′-9″	3′-6″	4′-2″	3′-9″	3′-5″	3′-1″	2′-10″
2-350S162-97	5′-1″	4′-10″	4′-8″	4′-6″	4′-5″	4′-10″	4′-7″	4′-5″	4′-3″	4′-1″
2-550S162-33	—	—	—	—	—	—	—	—	—	—
2-550S162-43	3′-11″	3′-5″	2′-11″	2′-5″	—	3′-0″	2′-5″	—	—	—
2-550S162-54	5′-7″	5′-0″	4′-7″	4′-2″	3′-9″	4′-8″	4′-2″	3′-8″	3′-3″	2′-11″
2-550S162-68	6′-7″	6′-4″	5′-11″	5′-6″	5′-1″	6′-0″	5′-6″	5′-0″	4′-7″	4′-3″
2-550S162-97	7′-4″	7′-0″	6′-9″	6′-6″	6′-4″	6′-11″	6′-8″	6′-5″	6′-2″	6′-0″
2-800S162-33	1′-11″	—	—	—	—	—	—	—	—	—
2-800S162-43	4′-2″	3′-8″	3′-4″	3′-0″	2′-6″	3′-5″	3′-0″	2′-4″	—	—
2-800S162-54	6′-7″	5′-11″	5′-5″	4′-11″	4′-6″	5′-6″	4′-11″	4′-5″	3′-11″	3′-6″
2-800S162-68	8′-3″	7′-8″	7′-1″	6′-8″	6′-2″	7′-3″	6′-7″	6′-1″	5′-7″	5′-2″
2-800S162-97	9′-11″	9′-6″	9′-2″	8′-10″	8′-7″	9′-5″	9′-0″	8′-7″	8′-2″	7′-9″
2-1000S162-43	3′-4″	2′-11″	2′-7″	2′-5″	2′-2″	2′-8″	2′-5″	2′-2″	1′-11″	—
2-1000S162-54	6′-7″	5′-10″	5′-3″	4′-9″	4′-4″	5′-4″	4′-9″	4′-3″	3′-10″	3′-6″
2-1000S162-68	9′-4″	8′-9″	8′-1″	7′-7″	7′-1″	8′-3″	7′-7″	6′-11″	6′-5″	5′-11″
2-1000S162-97	11′-7″	10′-11″	10′-4″	9′-10″	9′-5″	10′-5″	9′-10″	9′-3″	8′-10″	8′-5″
2-1200S162-54	5′-6″	4′-10″	4′-4″	3′-11″	3′-7″	4′-5″	3′-11″	3′-6″	3′-2″	2′-11″
2-1200S162-68	10′-4″	9′-8″	8′-8″	7′-11″	7′-2″	8′-11″	7′-11″	7′-1″	6′-5″	5′-10″
2-1200S162-97	12′-11″	12′-2″	11′-6″	11′-0″	10′-6″	11′-8″	11′-0″	10′-5″	9′-10″	9′-5″

For SI: 1 inch = 25.4 mm, 1 foot = 304.8 mm, 1 pound per square foot = 0.0479kPa, 1 pound per square inch = 6.895kPa.

a. Deflection criterion: $L/360$ for live loads, $L/240$ for total loads.

b. Design load assumptions:
Second floor dead load is 10 psf.
Roof/ceiling dead load is 12 psf.
Second floor live load is 30 psf.
Attic live load is 10 psf.

c. Building width is in the direction of horizontal framing members supported by the header.

TABLE 603.6(21)
BACK-TO-BACK HEADER SPANS
Headers Supporting Two Floors, Roof and Ceiling (33 ksi steel)[a, b]

MEMBER DESIGNATION	GROUND SNOW LOAD (20 psf)					GROUND SNOW LOAD (30 psf)				
	Building width[c] (feet)					Building width[c] (feet)				
	24	28	32	36	40	24	28	32	36	40
2-350S162-33	—	—	—	—	—	—	—	—	—	—
2-350S162-43	—	—	—	—	—	—	—	—	—	—
2-350S162-54	—	—	—	—	—	—	—	—	—	—
2-350S162-68	2′-5″	—	—	—	—	2′-4″	—	—	—	—
2-350S162-97	3′-6″	3′-2″	2′-10″	2′-6″	2′-3″	3′-6″	3′-1″	2′-9″	2′-6″	2′-3″
2-550S162-33	—	—	—	—	—	—	—	—	—	—
2-550S162-43	—	—	—	—	—	—	—	—	—	—
2-550S162-54	2′-6″	—	—	—	—	2′-5″	—	—	—	—
2-550S162-68	3′-9″	3′-3″	2′-9″	2′-4″	—	3′-8″	3′-2″	2′-9″	2′-4″	—
2-550S162-97	5′-3″	4′-9″	4′-4″	3′-11″	3′-8″	5′-2″	4′-8″	4′-3″	3′-11″	3′-7″
2-800S162-33	—	—	—	—	—	—	—	—	—	—
2-800S162-43	—	—	—	—	—	—	—	—	—	—
2-800S162-54	3′-5″	2′-8″	—	—	—	3′-4″	2′-7″	—	—	—
2-800S162-68	5′-1″	4′-5″	3′-11″	3′-4″	2′-11″	5′-0″	4′-4″	3′-10″	3′-4″	2′-10″
2-800S162-97	7′-0″	6′-5″	5′-11″	5′-5″	5′-0″	7′-0″	6′-4″	5′-10″	5′-5″	5′-0″
2-1000S162-43	—	—	—	—	—	—	—	—	—	—
2-1000S162-54	3′-11″	3′-1″	2′-3″	—	—	3′-10″	3′-0″	2′-2″	—	—
2-1000S162-68	5′-10″	5′-2″	4′-6″	4′-0″	3′-5″	5′-9″	5′-1″	4′-6″	3′-11″	3′-4″
2-1000S162-97	8′-5″	7′-8″	7′-1″	6′-6″	6′-1″	8′-4″	7′-7″	7′-0″	6′-6″	6′-0″
2-1200S162-54	4′-2″	3′-6″	2′-7″	—	—	4′-1″	3′-5″	2′-6″	—	—
2-1200S162-68	6′-6″	5′-9″	5′-1″	4′-6″	3′-11″	6′-6″	5′-8″	5′-0″	4′-5″	3′-10″
2-1200S162-97	9′-5″	8′-8″	8′-0″	7′-5″	6′-11″	9′-5″	8′-7″	7′-11″	7′-4″	6′-10″

For SI: 1 inch = 25.4 mm, 1 foot = 304.8 mm, 1 pound per square foot = 0.0479kPa, 1 pound per square inch = 6.895kPa.

a. Deflection criterion: *L*/360 for live loads, *L*/240 for total loads.

b. Design load assumptions:
Second floor dead load is 10 psf.
Roof/ceiling dead load is 12 psf.
Second floor live load is 40 psf.
Third floor live load is 30 psf.
Attic live load is 10 psf.

c. Building width is in the direction of horizontal framing members supported by the header.

TABLE 603.6(22)
BACK-TO-BACK HEADER SPANS
Headers Supporting Two Floors, Roof and Ceiling (50 ksi steel)[a, b]

MEMBER DESIGNATION	GROUND SNOW LOAD (20 psf)					GROUND SNOW LOAD (30 psf)				
	Building width[c] (feet)					Building width[c] (feet)				
	24	28	32	36	40	24	28	32	36	40
2-350S162-33	—	—	—	—	—	—	—	—	—	—
2-350S162-43	—	—	—	—	—	—	—	—	—	—
2-350S162-54	2′-9″	2′-3″	—	—	—	2′-8″	2′-3″	—	—	—
2-350S162-68	3′-11″	3′-6″	3′-2″	2′-10″	2′-6″	3′-11″	3′-6″	3′-1″	2′-9″	2′-6″
2-350S162-97	4′-9″	4′-6″	4′-4″	4′-1″	3′-10″	4′-8″	4′-6″	4′-4″	4′-1″	3′-9″
2-550S162-33	—	—	—	—	—	—	—	—	—	—
2-550S162-43	2′-9″	2′-0″	—	—	—	2′-8″	—	—	—	—
2-550S162-54	4′-5″	3′-10″	3′-4″	2′-11″	2′-5″	4′-4″	3′-9″	3′-3″	2′-10″	2′-5″
2-550S162-68	5′-8″	5′-2″	4′-8″	4′-3″	3′-11″	5′-8″	5′-1″	4′-8″	4′-3″	3′-10″
2-550S162-97	6′-10″	6′-6″	6′-3″	6′-0″	5′-7″	6′-9″	6′-5″	6′-3″	5′-11″	5′-6″
2-800S162-33	—	—	—	—	—	—	—	—	—	—
2-800S162-43	3′-2″	2′-7″	—	—	—	3′-1″	2′-6″	—	—	—
2-800S162-54	5′-2″	4′-7″	4′-0″	3′-6″	3′-0″	5′-2″	4′-6″	3′-11″	3′-5″	2′-11″
2-800S162-68	6′-11″	6′-3″	5′-8″	5′-2″	4′-9″	6′-10″	6′-2″	5′-7″	5′-2″	4′-8″
2-800S162-97	9′-3″	8′-8″	8′-3″	7′-9″	7′-4″	9′-2″	8′-8″	8′-2″	7′-9″	7′-4″
2-1000S162-43	2′-6″	2′-2″	2′-0″	—	—	2′-6″	2′-2″	1′-11″	—	—
2-1000S162-54	5′-0″	4′-4″	3′-11″	3′-6″	3′-2″	4′-11″	4′-4″	3′-10″	3′-6″	3′-2″
2-1000S162-68	7′-10″	7′-2″	6′-6″	5′-11″	5′-6″	7′-9″	7′-1″	6′-5″	5′-11″	5′-5″
2-1000S162-97	10′-1″	9′-5″	8′-11″	8′-6″	8′-0″	10′-0″	9′-5″	8′-10″	8′-5″	7′-11″
2-1200S162-54	—	—	—	—	—	—	—	—	—	—
2-1200S162-68	7′-4″	6′-8″	6′-1″	5′-6″	5′-1″	7′-3″	6′-7″	6′-0″	5′-6″	5′-0″
2-1200S162-97	9′-5″	8′-8″	8′-1″	7′-6″	7′-1″	9′-4″	8′-8″	8′-0″	7′-6″	7′-0″

For SI: 1 inch = 25.4 mm, 1 foot = 304.8 mm, 1 pound per square foot = 0.0479kPa, 1 pound per square inch = 6.895kPa.

a. Deflection criterion: *L*/360 for live loads, *L*/240 for total loads.

b. Design load assumptions:
Second floor dead load is 10 psf.
Roof/ceiling dead load is 12 psf.
Second floor live load is 40 psf.
Third floor live load is 30 psf.
Attic live load is 10 psf.

c. Building width is in the direction of horizontal framing members supported by the header.

TABLE 603.6(23)
BACK-TO-BACK HEADER SPANS
Headers Supporting Two Floors, Roof and ceiling (33 ksi steel)[a, b]

MEMBER DESIGNATION	GROUND SNOW LOAD (50 psf)					GROUND SNOW LOAD (70 psf)				
	Building width[c] (feet)					Building width[c] (feet)				
	24	28	32	36	40	24	28	32	36	40
2-350S162-33	—	—	—	—	—	—	—	—	—	—
2-350S162-43	—	—	—	—	—	—	—	—	—	—
2-350S162-54	—	—	—	—	—	—	—	—	—	—
2-350S162-68	2′-2″	—	—	—	—	—	—	—	—	—
2-350S162-97	3′-3″	3′-0″	2′-8″	2′-4″	2′-1″	3′-1″	2′-9″	2′-6″	2′-2″	—
2-550S162-33	—	—	—	—	—	—	—	—	—	—
2-550S162-43	—	—	—	—	—	—	—	—	—	—
2-550S162-54	2′-2″	—	—	—	—	—	—	—	—	—
2-550S162-68	3′-6″	3′-0″	2′-6″	2′-1″	—	3′-2″	2′-9″	2′-3″	—	—
2-550S162-97	5′-0″	4′-6″	4′-1″	3′-9″	3′-5″	4′-8″	4′-3″	3′-11″	3′-7″	3′-3″
2-800S162-33	—	—	—	—	—	—	—	—	—	—
2-800S162-43	—	—	—	—	—	—	—	—	—	—
2-800S162-54	3′-0″	2′-3″	—	—	—	2′-7″	—	—	—	—
2-800S162-68	4′-9″	4′-2″	3′-7″	3′-1″	2′-7″	4′-5″	3′-10″	3′-3″	2′-9″	2′-3″
2-800S162-97	6′-9″	6′-1″	5′-7″	5′-2″	4′-9″	6′-4″	5′-10″	5′-4″	4′-11″	4′-7″
2-1000S162-43	—	—	—	—	—	—	—	—	—	—
2-1000S162-54	3′-6″	2′-8″	—	—	—	3′-1″	2′-2″	—	—	—
2-1000S162-68	5′-6″	4′-10″	4′-2″	3′-7″	3′-1″	5′-1″	4′-6″	3′-10″	3′-4″	2′-9″
2-1000S162-97	8′-0″	7′-4″	6′-9″	6′-3″	5′-9″	7′-7″	7′-0″	6′-5″	5′-11″	5′-6″
2-1200S162-54	3′-11″	3′-0″	2′-0″	—	—	3′-5″	2′-6″	—	—	—
2-1200S162-68	6′-2″	5′-5″	4′-9″	4′-1″	3′-6″	5′-9″	5′-0″	4′-4″	3′-9″	3′-2″
2-1200S162-97	9′-1″	8′-4″	7′-8″	7′-1″	6′-7″	8′-8″	7′-11″	7′-4″	6′-9″	6′-3″

For SI: 1 inch = 25.4 mm, 1 foot = 304.8 mm, 1 pound per square foot = 0.0479kPa, 1 pound per square inch = 6.895kPa.

a. Deflection criterion: *L*/360 for live loads, *L*/240 for total loads.

b. Design load assumptions:
Second floor dead load is 10 psf.
Roof/ceiling dead load is 12 psf.
Second floor live load is 40 psf.
Third floor live load is 30 psf.
Attic live load is 10 psf.

c. Building width is in the direction of horizontal framing members supported by the header.

TABLE 603.6(24)
BACK-TO-BACK HEADER SPANS
Headers Supporting Two Floors, Roof and Ceiling (50 ksi steel)[a, b]

MEMBER DESIGNATION	GROUND SNOW LOAD (50 psf)					GROUND SNOW LOAD (70 psf)				
	Building width[c] (feet)					Building width[c] (feet)				
	24	28	32	36	40	24	28	32	36	40
2-350S162-33	—	—	—	—	—	—	—	—	—	—
2-350S162-43	—	—	—	—	—	—	—	—	—	—
2-350S162-54	2′-6″	2′-1″	—	—	—	2′-3″	—	—	—	—
2-350S162-68	3′-9″	3′-4″	2′-11″	2′-7″	2′-4″	3′-6″	3′-1″	2′-9″	2′-5″	2′-2″
2-350S162-97	4′-6″	4′-4″	4′-2″	3′-11″	3′-8″	4′-4″	4′-2″	4′-0″	3′-9″	3′-6″
2-550S162-33	—	—	—	—	—	—	—	—	—	—
2-550S162-43	2′-5″	—	—	—	—	—	—	—	—	—
2-550S162-54	4′-1″	3′-7″	3′-1″	2′-7″	2′-2″	3′-10″	3′-3″	2′-10″	2′-4″	—
2-550S162-68	5′-5″	4′-11″	4′-5″	4′-0″	3′-8″	5′-1″	4′-7″	4′-2″	3′-10″	3′-5″
2-550S162-97	6′-5″	6′-2″	5′-11″	5′-9″	5′-4″	6′-3″	6′-0″	5′-9″	5′-6″	5′-2″
2-800S162-33	—	—	—	—	—	—	—	—	—	—
2-800S162-43	2′-11″	2′-2″	—	—	—	2′-6″	—	—	—	—
2-800S162-54	4′-11″	4′-3″	3′-8″	3′-2″	2′-8″	4′-6″	3′-11″	3′-5″	2′-11″	2′-4″
2-800S162-68	6′-7″	5′-11″	5′-4″	4′-11″	4′-6″	6′-2″	5′-7″	5′-1″	4′-8″	4′-3″
2-800S162-97	8′-9″	8′-5″	7′-11″	7′-6″	7′-0″	8′-5″	8′-1″	7′-9″	7′-3″	6′-10″
2-1000S162-43	2′-4″	2′-1″	—	—	—	2′-2″	1′-11″	—	—	—
2-1000S162-54	4′-8″	4′-1″	3′-8″	3′-3″	3′-0″	4′-4″	3′-10″	3′-5″	3′-1″	2′-9″
2-1000S162-68	7′-6″	6′-9″	6′-2″	5′-8″	5′-2″	7′-1″	6′-5″	5′-10″	5′-4″	4′-11″
2-1000S162-97	9′-9″	9′-2″	8′-7″	8′-2″	7′-8″	9′-5″	8′-10″	8′-5″	7′-11″	7′-5″
2-1200S162-54	—	—	—	—	—	—	—	—	—	—
2-1200S162-68	7′-0″	6′-4″	5′-9″	5′-3″	4′-9″	6′-7″	6′-0″	5′-5″	5′-0″	4′-6″
2-1200S162-97	9′-1″	8′-4″	7′-9″	7′-3″	6′-9″	8′-8″	8′-0″	7′-6″	7′-0″	6′-7″

For SI: 1 inch = 25.4 mm, 1 foot = 304.8 mm, 1 pound per square foot = 0.0479kPa, 1 pound per square inch = 6.895kPa.

a. Deflection criterion: *L*/360 for live loads, *L*/240 for total loads.

b. Design load assumptions:
Second floor dead load is 10 psf.
Roof/ceiling dead load is 12 psf.
Second floor live load is 40 psf.
Third floor live load is 30 psf.
Attic live load is 10 psf.

c. Building width is in the direction of horizontal framing members supported by the header.

TABLE 603.7(1)
TOTAL NUMBER OF JACK AND KING STUDS REQUIRED AT EACH END OF AN OPENING

SIZE OF OPENING (feet-inches)	24 O.C. STUD SPACING		16 O.C. STUD SPACING	
	No. of jack studs	No. of king studs	No. of jack studs	No. of king studs
Up to 3′-6″	1	1	1	1
> 3′-6″ to 5′-0″	1	2	1	2
> 5′-0″ to 5′-6″	1	2	2	2
> 5′-6″ to 8′-0″	1	2	2	2
> 8′-0″ to 10′-6″	2	2	2	3
> 10′-6″ to 12′-0″	2	2	3	3
> 12′-0″ to 13′-0″	2	3	3	3
> 13′-0″ to 14′-0″	2	3	3	4
> 14′-0″ to 16′-0″	2	3	3	4
> 16′-0″ to 18′-0″	3	3	4	4

For SI: 1 inch = 25.4 mm, 1 foot = 304.8 mm.

TABLE 603.7(2)
HEADER TO KING STUD CONNECTION REQUIREMENTS[a, b, c, d]

HEADER SPAN (feet)	BASIC WIND SPEED (mph), EXPOSURE		
	85 B or Seismic Design Categories A, B, C, D_0, D_1 and D_2	85 C or less than 110 B	Less than 110 C
≤ 4′	4-No. 8 screws	4-No. 8 screws	6-No. 8 screws
> 4′ to 8′	4-No. 8 screws	4-No. 8 screws	8-No. 8 screws
> 8′ to 12′	4-No. 8 screws	6-No. 8 screws	10-No. 8 screws
> 12′to 16′	4-No. 8 screws	8-No. 8 screws	12-No. 8 screws

For SI: 1 inch = 25.4 mm, 1 foot = 304.8 mm, 1 mile per hour = 0.447 m/s, 1 pound = 4.448 N.

a. All screw sizes shown are minimum.

b. For headers located on the first floor of a two-story building or the first or second floor of a three-story building, the total number of screws is permitted to be reduced by 2 screws, but the total number of screws shall be no less than 4.

c. For roof slopes of 6:12 or greater, the required number of screws may be reduced by half, but the total number of screws shall be no less than four.

d. Screws can be replaced by an uplift connector which has a capacity of the number of screws multiplied by 164 pounds (e.g., 12-No. 8 screws can be replaced by an uplift connector whose capacity exceeds 12 × 164 pounds = 1,968 pounds).

TABLE 603.8
HEAD AND SILL TRACK SPAN
F y = 33 ksi

BASIC WIND SPEED (mph)		ALLOWABLE HEAD AND SILL TRACK SPAN[a,b,c] (ft-in.)					
EXPOSURE		TRACK DESIGNATION					
B	C	350T125-33	350T125-43	350T125-54	550T125-33	550T125-43	550T125-54
85	—	5′-0″	5′-7″	6′-2″	5′-10″	6′-8″	7′-0″
90	—	4′-10″	5′-5″	6′-0″	5′-8″	6′-3″	6′-10″
100	85	4′-6″	5′-1″	5′-8″	5′-4″	5′-11″	6′-5″
110	90	4′-2″	4′-9″	5′-4″	5′-1″	5′-7″	6′-1″
120	100	3′-11″	4′-6″	5′-0″	4′-10″	5′-4″	5′-10″
130	110	3′-8″	4′-2″	4′-9″	4′-1″	5′-1″	5′-7″
140	120	3′-7″	4′-1″	4′-7″	3′-6″	4′-11″	5′-5″
150	130	3′-5″	3′-10″	4′-4″	2′-11″	4′-7″	5′-2″
—	140	3′-1″	3′-6″	4′-1″	2′-3″	4′-0″	4′-10″
—	150	2′-9″	3′-4″	3′-10″	2′-0″	3′-7″	4′-7″

For SI: 1 inch = 25.4 mm, 1 foot = 304.8 mm, 1 mile per hour = 0.447 m/s.
a. Deflection limit: *L*/240.
b. Head and sill track spans are based on components and cladding wind speeds and 48 inch tributary span.
c. For openings less than 4 feet in height that have both a head track and sill track, the above spans are permitted to be multiplied by 1.75. For openings less than or equal to 6 feet in height that have both a head track and a sill track, the above spans are permitted to be multiplied by a factor of 1.5.

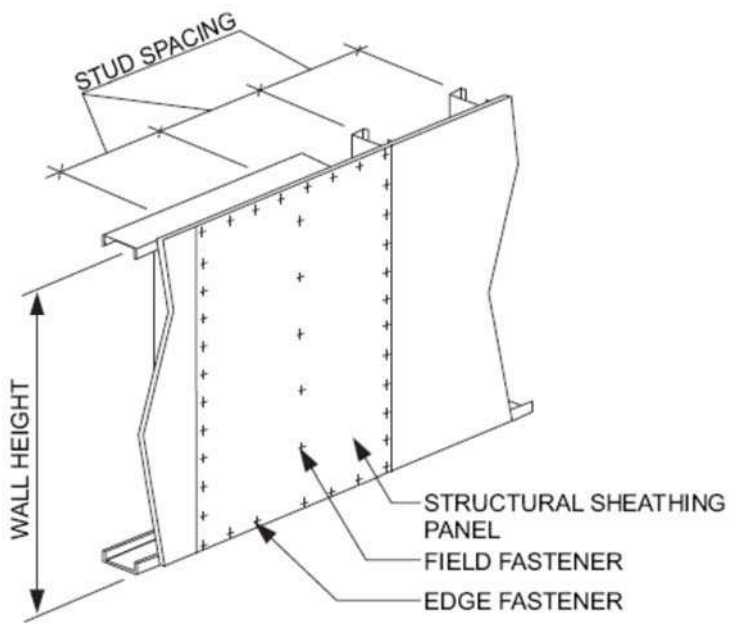

FIGURE 603.9
STRUCTURAL SHEATHING FASTENING PATTERN

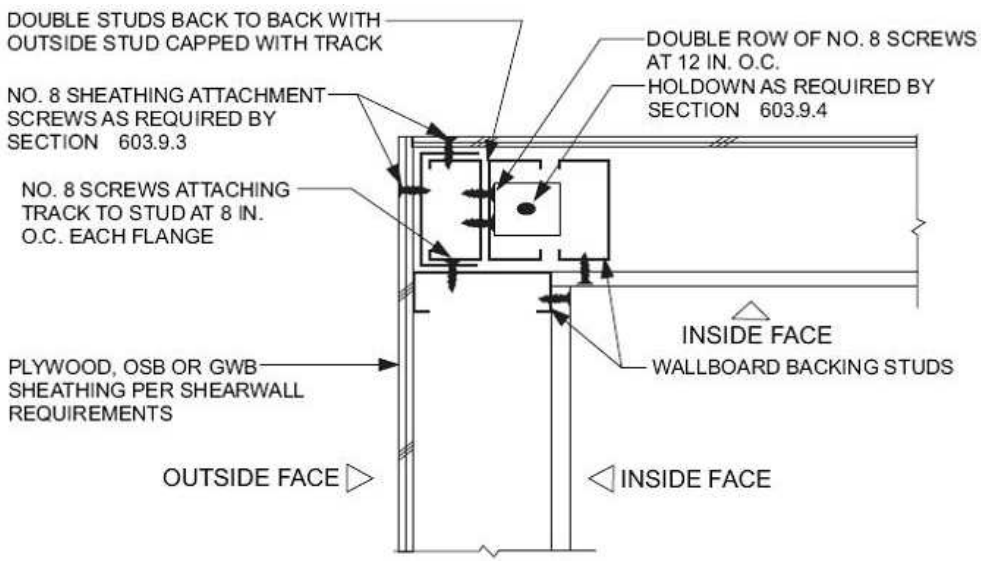

For SI: 1 inch = 25.4 mm.

FIGURE 603.9.2
CORNER STUD HOLD DOWN DETAIL

TABLE 603.9.2(1)
MINIMUM PERCENTAGE OF FULL HEIGHT STRUCTURAL SHEATHING ON EXTERIOR WALLS[a,b]

WALL SUPPORTING	ROOF SLOPE	BASIC WIND SPEED AND EXPOSURE (mph)					
		85 B	90 B	100 B / 85 C	< 110B / 90 C	100 C	< 110 C
Roof and ceiling only (One story or top floor of two or three story building)	3:12	8	9	9	12	16	20
	6:12	12	13	15	20	26	35
	9:12	21	23	25	30	50	58
	12:12	30	33	35	40	66	75
One story, roof and ceiling (First floor of a two-story building or second floor of a three story building)	3:12	24	27	30	35	50	66
	6:12	25	28	30	40	58	74
	9:12	35	38	40	55	74	91
	12:12	40	45	50	65	100	115
Two story, roof and ceiling (First floor of a three story building)	3:12	40	45	51	58	84	112
	6:12	38	43	45	60	90	113
	9:12	49	53	55	80	98	124
	12:12	50	57	65	90	134	155

For SI: 1 mile per hour = 0.447 m/s.

a. Linear interpolation is permitted.

b. For hip-roofed homes the minimum percentage of full height sheathing, based upon wind, is permitted to be multiplied by a factor of 0.95 for roof slopes not exceeding 7:12 and a factor of 0.9 for roof slopes greater than 7:12.

TABLE 603.9.2(2)
FULL HEIGHT SHEATHING LENGTH ADJUSTMENT FACTORS

PLAN ASPECT RATIO	LENGTH ADJUSTMENT FACTORS	
	Short wall	Long wall
1:1	1.0	1.0
1.5:1	1.5	0.67
2:1	2.0	0.50
3:1	3.0	0.33
4:1	4.0	0.25

SECTION 604
WOOD STRUCTURAL PANELS

604.1 Identification and grade. Wood structural panels shall conform to DOC PS 1 or DOC PS 2 or, when manufactured in Canada, CSA O437 or CSA O325. All panels shall be identified by a grade mark or certificate of inspection issued by an approved agency.

604.2 Allowable spans. The maximum allowable spans for wood structural panel wall sheathing shall not exceed the values set forth in Table 602.3(3).

604.3 Installation. Wood structural panel wall sheathing shall be attached to framing in accordance with Table 602.3(1) or Table 602.3(3). Wood structural panels marked Exposure 1 or Exterior are considered water-repellent sheathing under the code.

SECTION 605
PARTICLEBOARD

605.1 Identification and grade. Particleboard shall conform to ANSI A208.1 and shall be so identified by a grade mark or certificate of inspection issued by an approved agency. Particleboard shall comply with the grades specified in Table 602.3(4).

SECTION 606
GENERAL MASONRY CONSTRUCTION

606.1 General. Masonry construction shall be designed and constructed in accordance with the provisions of this section or in accordance with the provisions of TMS 402/ACI 530/ASCE 5.

606.1.1 Professional registration not required. When the empirical design provisions of *TMS 402/ACI 530/ASCE 5* Chapter 5 or the provisions of this section are used to design masonry, project drawings, typical details and specifications are not required to bear the seal of the architect or engineer responsible for design, unless otherwise required by the state law of the jurisdiction having authority.

606.2 Thickness of masonry. The nominal thickness of masonry walls shall conform to the requirements of Sections 606.2.1 through 606.2.4.

606.2.1 Minimum thickness. The minimum thickness of masonry bearing walls more than one story high shall be 8 inches (203 mm). Solid masonry walls of one-story dwellings and garages shall not be less than 6 inches (152 mm) in thickness when not greater than 9 feet (2743 mm) in height, provided that when gable construction is used, an additional 6 feet (1829 mm) is permitted to the peak of the gable. Masonry walls shall be laterally supported in either the horizontal or vertical direction at intervals as required by Section 606.9.

606.2.2 Rubble stone masonry wall. The minimum thickness of rough, random or coursed rubble stone masonry walls shall be 16 inches (406 mm).

606.2.3 Change in thickness. Where walls of masonry of hollow units or masonry-bonded hollow walls are decreased in thickness, a course of solid masonry shall be constructed between the wall below and the thinner wall above, or special units or construction shall be used to transmit the loads from face shells or wythes above to those below.

606.2.4 Parapet walls. Unreinforced solid masonry parapet walls shall not be less than 8 inches (203 mm) thick and their height shall not exceed four times their thickness. Unreinforced hollow unit masonry parapet walls shall be not less than 8 inches (203 mm) thick, and their height shall not exceed three times their thickness. Masonry parapet walls in areas subject to wind loads of 30 pounds per square foot (1.44 kPa) located in Seismic Design Category D_0, D_1 or D_2, or on townhouses in Seismic Design Category C shall be reinforced in accordance with Section 606.12.

606.3 Corbeled masonry. Corbeled masonry shall be in accordance with Sections 606.3.1 through 606.3.3.

606.3.1 Units. Solid masonry units or masonry units filled with mortar or grout shall be used for corbeling.

606.3.2 Corbel projection. The maximum projection of one unit shall not exceed one-half the height of the unit or one-third the thickness at right angles to the wall. The maximum corbeled projection beyond the face of the wall shall not exceed:

1. One-half of the wall thickness for multiwythe walls bonded by mortar or grout and wall ties or masonry headers, or

2. One-half the wythe thickness for single wythe walls, masonry-bonded hollow walls, multiwythe walls with open collar joints and veneer walls.

606.3.3 Corbeled masonry supporting floor or roof-framing members. When corbeled masonry is used to support floor or roof-framing members, the top course of the corbel shall be a header course or the top course bed joint shall have ties to the vertical wall.

606.4 Support conditions. Bearing and support conditions shall be in accordance with Sections 606.4.1 and 606.4.2.

606.4.1 Bearing on support. Each masonry wythe shall be supported by at least two-thirds of the wythe thickness.

606.4.2 Support at foundation. Cavity wall or masonry veneer construction may be supported on an 8-inch (203 mm) foundation wall, provided the 8-inch (203 mm) wall is corbeled to the width of the wall system above with masonry constructed of solid masonry units or masonry units filled with mortar or grout. The total horizontal projection of the corbel shall not exceed 2 inches (51 mm) with individual corbels projecting not more than one-third the thickness of the unit or one-half the height of the unit. The hollow space behind the corbeled masonry shall be filled with mortar or grout.

606.5 Allowable stresses. Allowable compressive stresses in masonry shall not exceed the values prescribed in Table 606.5. In determining the stresses in masonry, the effects of all loads and conditions of loading and the influence of all forces affecting the design and strength of the several parts shall be taken into account.

606.5.1 Combined units. In walls or other structural members composed of different kinds or grades of units, materials or mortars, the maximum stress shall not exceed the allowable stress for the weakest of the combination of units, materials and mortars of which the member is composed. The net thickness of

any facing unit that is used to resist stress shall not be less than 1.5 inches (38 mm).

606.6 Piers. The unsupported height of masonry piers shall not exceed ten times their least dimension. When structural clay tile or hollow concrete masonry units are used for isolated piers to support beams and girders, the cellular spaces shall be filled solidly with concrete or Type M or S mortar, except that unfilled hollow piers may be used if their unsupported height is not more than four times their least dimension. Where hollow masonry units are solidly filled with concrete or Type M, S or N mortar, the allowable compressive stress shall be permitted to be increased as provided in Table 606.5.

606.6.1 Pier cap. Hollow piers shall be capped with 4 inches (102 mm) of solid masonry or concrete or shall have cavities of the top course filled with concrete or grout or other approved methods.

606.7 Chases. Chases and recesses in masonry walls shall not be deeper than one-third the wall thickness, and the maximum length of a horizontal chase or horizontal projection shall not exceed 4 feet (1219 mm), and shall have at least 8 inches (203 mm) of masonry in back of the chases and recesses and between adjacent chases or recesses and the jambs of openings. Chases and recesses in masonry walls shall be designed and constructed so as not to reduce the required strength or required fire resistance of the wall and in no case shall a chase or recess be permitted within the required area of a pier. Masonry directly above chases or recesses wider than 12 inches (305 mm) shall be supported on noncombustible lintels.

TABLE 606.5
ALLOWABLE COMPRESSIVE STRESSES FOR EMPIRICAL DESIGN OF MASONRY

CONSTRUCTION; COMPRESSIVE STRENGTH OF UNIT, GROSS AREA	ALLOWABLE COMPRESSIVE STRESSES[a] GROSS CROSS-SECTIONAL AREA[b]	
	Type M or S mortar	Type N mortar
Solid masonry of brick and other solid units of clay or shale; sand-lime or concrete brick:		
8,000+ psi	350	300
4,500 psi	225	200
2,500 psi	160	140
1,500 psi	115	100
Grouted[c] masonry, of clay or shale; sand-lime or concrete:		
4,500+ psi	225	200
2,500 psi	160	140
1,500 psi	115	100
Solid masonry of solid concrete masonry units:		
3,000+ psi	225	200
2,000 psi	160	140
1,200 psi	115	100
Masonry of hollow load-bearing units:		
2,000+ psi	140	120
1,500 psi	115	100
1,000 psi	75	70
700 psi	60	55
Hollow walls (cavity or masonry bonded[d]) solid units:		
2,500+ psi	160	140
1,500 psi	115	100
Hollow units	75	70
Stone ashlar masonry:		
Granite	720	640
Limestone or marble	450	400
Sandstone or cast stone	360	320
Rubble stone masonry:		
Coarse, rough or random	120	100

For SI: 1 pound per square inch = 6.895 kPa.

a. Linear interpolation shall be used for determining allowable stresses for masonry units having compressive strengths that are intermediate between those given in the table.

b. Gross cross-sectional area shall be calculated on the actual rather than nominal dimensions.

c. See Section 608.

d. Where floor and roof loads are carried upon one wythe, the gross cross-sectional area is that of the wythe under load; if both wythes are loaded, the gross cross-sectional area is that of the wall minus the area of the cavity between the wythes. Walls bonded with metal ties shall be considered as cavity walls unless the collar joints are filled with mortar or grout.

606.8 Stack bond. In unreinforced masonry where masonry units are laid in stack bond, longitudinal reinforcement consisting of not less than two continuous wires each with a minimum aggregate cross-sectional area of 0.017 square inch (11 mm^2) shall be provided in horizontal bed joints spaced not more than 16 inches (406 mm) on center vertically.

606.9 Lateral support. Masonry walls shall be laterally supported in either the horizontal or the vertical direction. The maximum spacing between lateral supports shall not exceed the distances in Table 606.9. Lateral support shall be provided by cross walls, pilasters, buttresses or structural frame members when the limiting distance is taken horizontally, or by floors or roofs when the limiting distance is taken vertically.

TABLE 606.9
SPACING OF LATERAL SUPPORT FOR MASONRY WALLS

CONSTRUCTION	MAXIMUM WALL LENGTH TO THICKNESS OR WALL HEIGHT TO THICKNESS[a,b]
Bearing walls:	
Solid or solid grouted	20
All other	18
Nonbearing walls:	
Exterior	18
Interior	36

For SI: 1 foot = 304.8 mm.

a. Except for cavity walls and cantilevered walls, the thickness of a wall shall be its nominal thickness measured perpendicular to the face of the wall. For cavity walls, the thickness shall be determined as the sum of the nominal thicknesses of the individual wythes. For cantilever walls, except for parapets, the ratio of height to nominal thickness shall not exceed 6 for solid masonry, or 4 for hollow masonry. For parapets, see Section 606.2.4.

b. An additional unsupported height of 6 feet is permitted for gable end walls.

606.9.1 Horizontal lateral support. Lateral support in the horizontal direction provided by intersecting masonry walls shall be provided by one of the methods in Section 606.9.1.1 or Section 606.9.1.2.

606.9.1.1 Bonding pattern. Fifty percent of the units at the intersection shall be laid in an overlapping masonry bonding pattern, with alternate units having a bearing of not less than 3 inches (76 mm) on the unit below.

606.9.1.2 Metal reinforcement. Interior nonloadbearing walls shall be anchored at their intersections, at vertical intervals of not more than 16 inches (406 mm) with joint reinforcement of at least 9 gage [0.148 in. (4mm)], or ¼ inch (6 mm) galvanized mesh hardware cloth. Intersecting

masonry walls, other than interior nonloadbearing walls, shall be anchored at vertical intervals of not more than 8 inches (203 mm) with joint reinforcement of at least 9 gage and shall extend at least 30 inches (762 mm) in each direction at the intersection. Other metal ties, joint reinforcement or anchors, if used, shall be spaced to provide equivalent area of anchorage to that required by this section.

606.9.2 Vertical lateral support. Vertical lateral support of masonry walls in Seismic Design Category A, B or C shall be provided in accordance with one of the methods in Section 606.9.2.1 or Section 606.9.2.2.

606.9.2.1 Roof structures. Masonry walls shall be anchored to roof structures with metal strap anchors spaced in accordance with the manufacturer's instructions, ½ inch (13 mm) bolts spaced not more than 6 feet (1829 mm) on center, or other approved anchors. Anchors shall be embedded at least 16 inches (406 mm) into the masonry, or be hooked or welded to bond beam reinforcement placed not less than 6 inches (152 mm) from the top of the wall.

606.9.2.2 Floor diaphragms. Masonry walls shall be anchored to floor diaphragm framing by metal strap anchors spaced in accordance with the manufacturer's instructions, ½-inch-diameter (13 mm) bolts spaced at intervals not to exceed 6 feet (1829 mm) and installed as shown in Figure 606.11(1), or by other approved methods.

606.10 Lintels. Masonry over openings shall be supported by steel lintels, reinforced concrete or masonry lintels or masonry arches, designed to support load imposed.

606.11 Anchorage. Masonry walls shall be anchored to floor and roof systems in accordance with the details shown in Figure 606.11(1), 606.11(2) or 606.11(3). Footings may be considered as points of lateral support.

606.12 Seismic requirements. The seismic requirements of this section shall apply to the design of masonry and the construction of masonry building elements located in Seismic Design Category D_0, D_1 or D_2. Townhouses in Seismic Design Category C shall comply with the requirements of Section 606.12.2. These requirements shall not apply to glass unit masonry conforming to Section 610 or masonry veneer conforming to Section 703.7.

606.12.1 General. Masonry structures and masonry elements shall comply with the requirements of Sections 606.12.2 through 606.12.4 based on the seismic design category established in Table 301.2(1). Masonry structures and masonry elements shall comply with the requirements of Section 606.12 and Figures 606.11(1), 606.11(2) and 606.11(3) or shall be designed in accordance with *TMS 402/ACI 530/ASCE 5.*

606.12.1.1 Floor and roof diaphragm construction. Floor and roof diaphragms shall be constructed of wood structural panels attached to wood framing in accordance with Table 602.3(1) or to cold-formed steel floor framing in accordance with Table 505.3.1(2) or to cold-formed steel roof framing in accordance with Table 804.3. Additionally, sheathing panel edges perpendicular to framing members shall be backed by blocking, and sheathing shall be connected to the blocking with fasteners at the edge spacing. For Seismic Design Categories C, D_0, D_1 and D_2, where the width-to-thickness dimension of the diaphragm exceeds 2-to-1, edge spacing of fasteners shall be 4 inches (102 mm) on center.

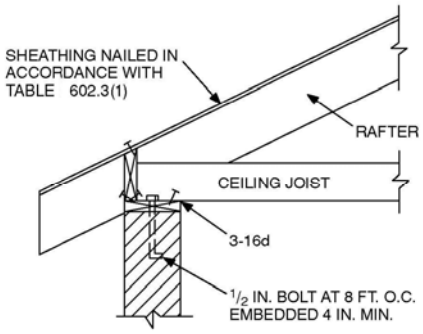

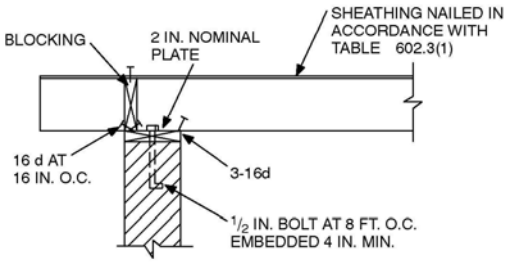

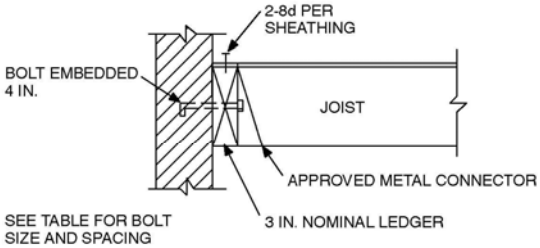

LEDGER BOLT SIZE AND SPACING

JOIST SPAN	BOLT SIZE AND SPACING	
	ROOF	FLOOR
10 FT.	1/2 AT 2 FT. 6 IN. 7/8 AT 3 FT. 6 IN.	1/2 AT 2 FT. 0 IN. 7/8 AT 2 FT. 9 IN.
10–15 FT.	1/2 AT 1 FT. 9 IN. 7/8 AT 2 FT. 6 IN.	1/2 AT 1 FT. 4 IN. 7/8 AT 2 FT. 0 IN.
15-20 FT.	1/2 AT 1 FT. 3 IN. 7/8 AT 2 FT. 0 IN.	1/2 AT 1 FT. 0 IN. 7/8 AT 1 FT. 6 IN.

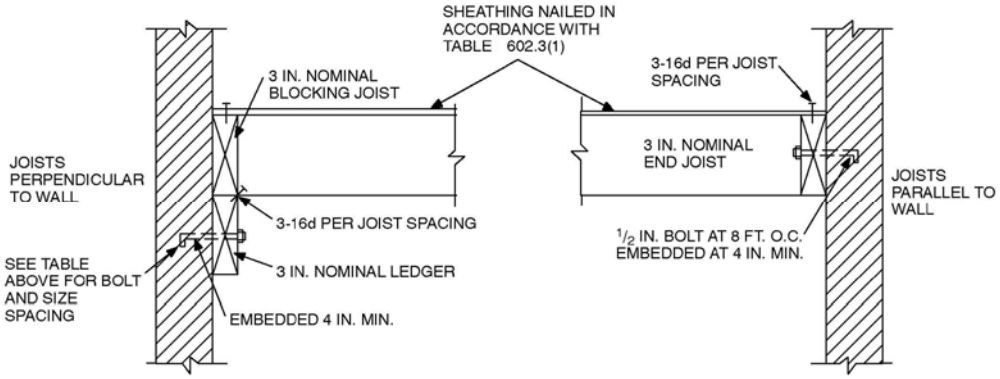

NOTE: Where bolts are located in hollow masonry, the cells in the courses receiving the bolt shall be grouted solid.
For SI: 1 inch = 25.4 mm, 1 foot = 304.8 mm, 1 pound per square foot = 0.0.479kPa.

FIGURE 606.11(1)
ANCHORAGE REQUIREMENTS FOR MASONRY WALLS LOCATED IN SEISMIC DESIGN CATEGORY A, B OR C AND WHERE WIND LOADS ARE LESS THAN 30 PSF

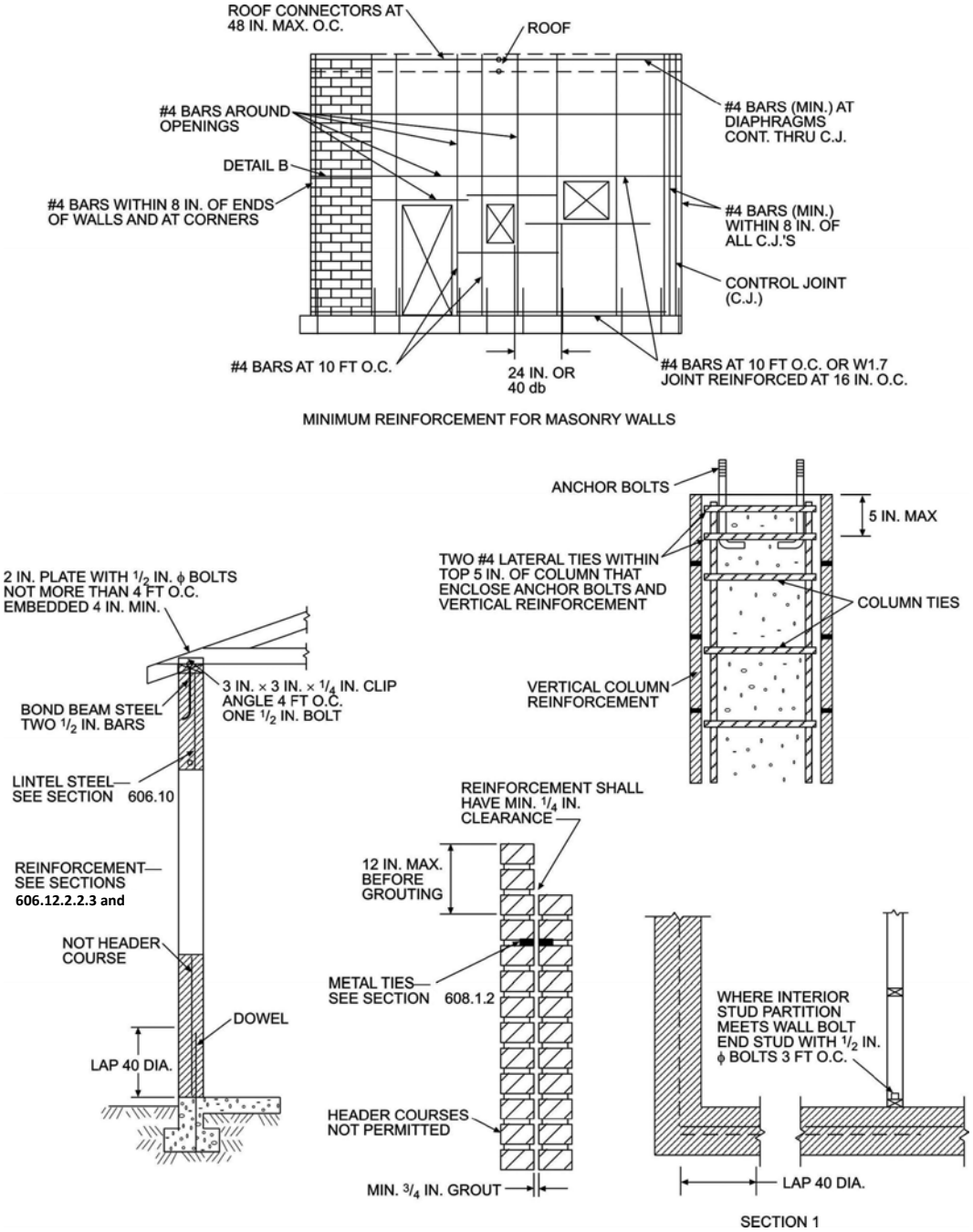

For SI: 1 inch = 25.4 mm, 1 foot = 304.8 mm.

FIGURE 606.11(2)
REQUIREMENTS FOR REINFORCED GROUTED MASONRY CONSTRUCTION IN SEISMIC DESIGN CATEGORY C

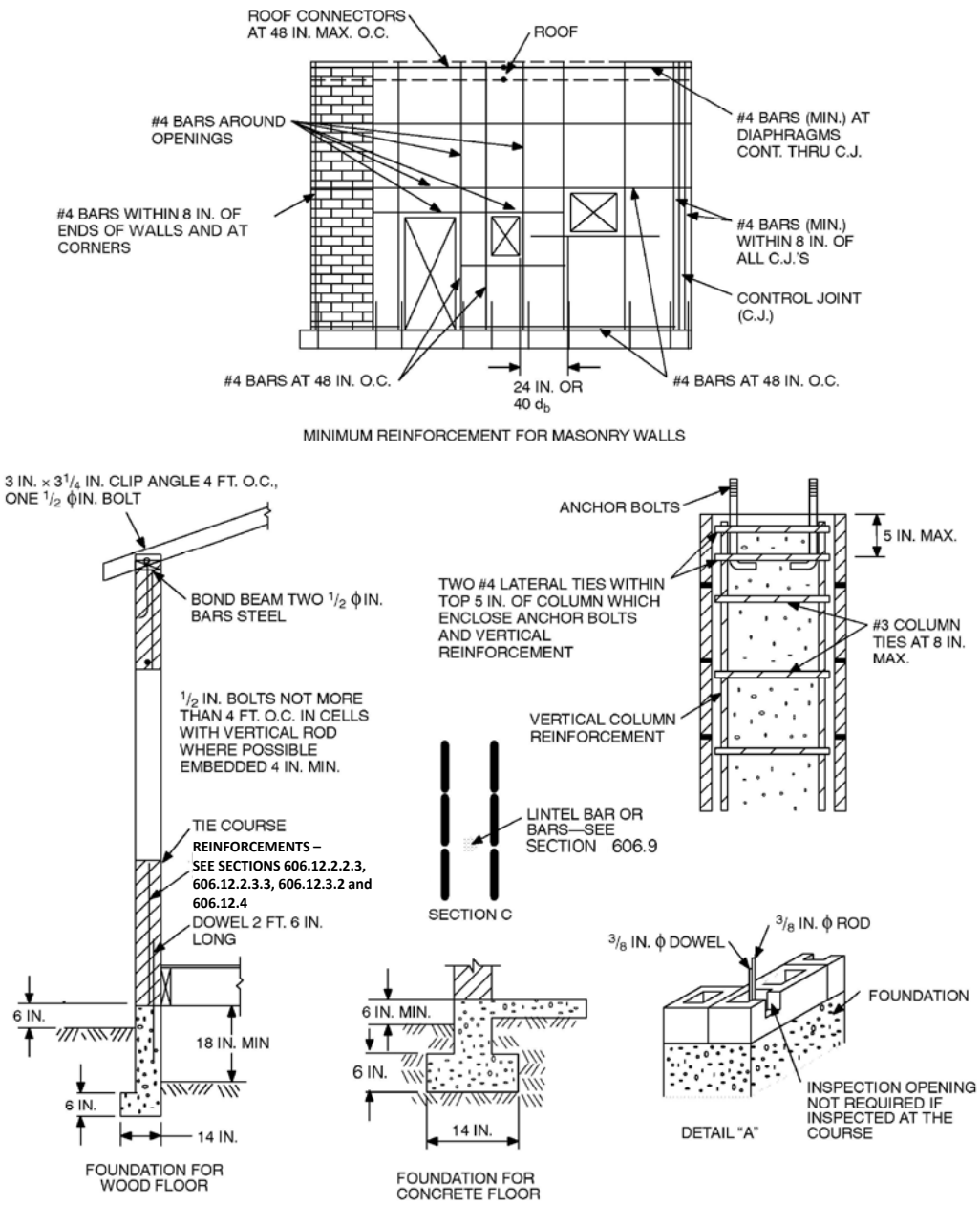

NOTE: A full bed joint must be provided. All cells containing vertical bars are to be filled to the top of wall and provide inspection opening as shown on detail "A." Horizontal bars are to be laid as shown on detail "B." Lintel bars are to be laid as shown on Section C.
For SI: 1 inch = 25.4 mm, 1 foot = 304.8 mm.

FIGURE 606.11(3)
REQUIREMENTS FOR REINFORCED MASONRY CONSTRUCTION IN SEISMIC DESIGN CATEGORY D_0, D_1, OR D_2

606.12.2 Seismic Design Category C. Townhouses located in Seismic Design Category C shall comply with the requirements of this section.

606.12.2.1 Minimum length of wall without openings. Table 606.12.2.1 shall be used to determine the minimum required solid wall length without openings at each masonry exterior wall. The provided percentage of solid wall length shall include only those wall segments that are 3 feet (914 mm) or longer. The maximum clear distance between wall segments included in determining the solid wall length shall not exceed 18 feet (5486 mm). Shear wall segments required to meet the minimum wall length shall be in accordance with Section 606.12.2.2.3.

606.12.2.2 Design of elements not part of the lateral force-resisting system.

606.12.2.2.1 Load-bearing frames or columns. Elements not part of the lateral-force-resisting system shall be analyzed to determine their effect on the response of the system. The frames or columns shall be adequate for vertical load carrying capacity and induced moment caused by the design story drift.

606.12.2.2.2 Masonry partition walls. Masonry partition walls, masonry screen walls and other masonry elements that are not designed to resist vertical or lateral loads, other than those induced by their own weight, shall be isolated from the structure so that vertical and lateral forces are not imparted to these elements. Isolation joints and connectors between these elements and the structure shall be designed to accommodate the design story drift.

606.12.2.2.3 Reinforcement requirements for masonry elements. Masonry elements listed in Section 606.12.2.2.2 shall be reinforced in either the horizontal or vertical direction as shown in Figure 606.11(2) and in accordance with the following:

1. Horizontal reinforcement. Horizontal joint reinforcement shall consist of at least two longitudinal W1.7 wires spaced not more than 16 inches (406 mm) for walls greater than 4 inches (102 mm) in width and at least one longitudinal W1.7 wire spaced not more than 16 inches (406 mm) for walls not exceeding 4 inches (102 mm) in width; or at least one No. 4 bar spaced not more than 48 inches (1219 mm). Where two longitudinal wires of joint

reinforcement are used, the space between these wires shall be the widest that the mortar joint will accommodate. Horizontal reinforcement shall be provided within 16 inches (406 mm) of the top and bottom of these masonry elements.

2. Vertical reinforcement. Vertical reinforcement shall consist of at least one No. 4 bar spaced not more than 48 inches (1219 mm). Vertical reinforcement shall be located within 16 inches (406 mm) of the ends of masonry walls.

606.12.2.3 Design of elements part of the lateral-force-resisting system.

606.12.2.3.1 Connections to masonry shear walls. Connectors shall be provided to transfer forces between masonry walls and horizontal elements in accordance with the requirements of *Section 1.7.4 of TMS 402/ACI 530/ASCE 5*. Connectors shall be designed to transfer horizontal design forces acting either perpendicular or parallel to the wall, but not less than 200 pounds per linear foot (2919 N/m) of wall. The maximum spacing between connectors shall be 4 feet (1219 mm). Such anchorage mechanisms shall not induce tension stresses perpendicular to grain in ledgers or nailers.

606.12.2.3.2 Connections to masonry columns. Connectors shall be provided to transfer forces between masonry columns and horizontal elements in accordance with the requirements of *Section 1.7.4 of TMS 402/ACI 530/ASCE 5.* Where anchor bolts are used to connect horizontal elements to the tops of columns, the bolts shall be placed within lateral ties. Lateral ties shall enclose both the vertical bars in the column and the anchor bolts. There shall be a minimum of two No. 4 lateral ties provided in the top 5 inches (127 mm) of the column.

606.12.2.3.3 Minimum reinforcement requirements for masonry shear walls. Vertical reinforcement of at least one No. 4 bar shall be provided at corners, within 16 inches (406 mm) of each side of openings, within 8 inches (203 mm) of each side of movement joints, within 8 inches (203 mm) of the ends of walls, and at a maximum spacing of 10 feet (3048 mm).

Horizontal joint reinforcement shall consist of at least two wires of W1.7 spaced not more than 16 inches (406 mm); or bond beam reinforcement of at least one No. 4 bar spaced not more than 10 feet

(3048 mm) shall be provided. Horizontal reinforcement shall also be provided at the bottom and top of wall openings and shall extend not less than 24 inches (610 mm) nor less than 40 bar diameters past the opening; continuously at structurally connected roof and floor levels; and within 16 inches (406 mm) of the top of walls.

TABLE 606.12.2.1
MINIMUM SOLID WALL LENGTH ALONG EXTERIOR WALL LINES

SESIMIC DESIGN CATEGORY	MINIMUM SOLID WALL LENGTH (percent)[a]		
	One Story or Top Story of Two Story	Wall Supporting Light-framed Second Story and Roof	Wall Supporting Masonry Second Story and Roof
Townhouses in C	20	25	35
D_0 or D_1	25	NP	NP
D_2	30	NP	NP

NP = Not permitted , except with design in accordance with the *Ohio Building Code*.
a. For all walls, the minimum required length of solid walls shall be based on the table percent multiplied by the dimension, parallel to the wall direction under consideration, of a rectangle inscribing the overall building plan.

606.12.3 Seismic Design Category D_0 or D_1. Structures in Seismic Design Category D_0 or D_1 shall comply with the requirements of Seismic Design Category C and the additional requirements of this section.

606.12.3.1 Design requirements. Masonry elements other than those covered by Section 606.12.2.2.2 shall be designed in accordance with the requirements of Chapter 1 and Sections 2.1 and 2.3 of *Section 1.7.4 of* TMS 402/ACI 530/ASCE 5 and shall meet the minimum reinforcement requirements contained in Sections 606.12.3.2 and 606.12.3.2.1.

Exception: Masonry walls limited to one story in height and 9 feet (2743 mm) between lateral supports need not be designed provided they comply with the minimum reinforcement requirements of Sections 606.12.3.2 and 606.12.3.2.1.

606.12.3.2 Minimum reinforcement requirements for masonry walls. Masonry walls other than those covered by Section 606.12.2.2.3 shall be reinforced in both the vertical and horizontal direction. The sum of the cross-sectional area of horizontal and vertical reinforcement shall be at least 0.002 times the gross cross-sectional area of the wall, and the minimum cross-sectional area in each direction shall be not less than 0.0007 times the gross cross-sectional area of the wall. Reinforcement shall be uniformly distributed. Table 606.12.3.2 shows the minimum reinforcing bar sizes required for varying thicknesses of masonry walls. The maximum spacing

of reinforcement shall be 48 inches (1219 mm) provided that the walls are solid grouted and constructed of hollow open-end units, hollow units laid with full head joints or two wythes of solid units. The maximum spacing of reinforcement shall be 24 inches (610 mm) for all other masonry.

606.12.3.2.1 Shear wall reinforcement requirements. The maximum spacing of vertical and horizontal reinforcement shall be the smaller of one-third the length of the shear wall, one-third the height of the shear wall, or 48 inches (1219 mm). The minimum cross-sectional area of vertical reinforcement shall be one-third of the required shear reinforcement. Shear reinforcement shall be anchored around vertical reinforcing bars with a standard hook.

606.12.3.3 Minimum reinforcement for masonry columns. Lateral ties in masonry columns shall be spaced not more than 8 inches (203 mm) on center and shall be at least $^{3}/_{8}$ inch (9.5 mm) diameter. Lateral ties shall be embedded in grout.

606.12.3.4 Material restrictions. Type N mortar or masonry cement shall not be used as part of the lateral-force-resisting system.

606.12.3.5 Lateral tie anchorage. Standard hooks for lateral tie anchorage shall be either a 135-degree (2.4 rad) standard hook or a 180-degree (3.2 rad) standard hook.

606.12.4 Seismic Design Category D_2. All structures in Seismic Design Category D_2 shall comply with the requirements of Seismic Design Category D_1 and to the additional requirements of this section.

606.12.4.1 Design of elements not part of the lateral-force-resisting system. Stack bond masonry that is not part of the lateral-force-resisting system shall have a horizontal cross-sectional area of reinforcement of at least 0.0015 times the gross cross-sectional area of masonry. Table 606.12.4.1 shows minimum reinforcing bar sizes for masonry walls. The maximum spacing of horizontal reinforcement shall be 24 inches (610 mm). These elements shall be solidly grouted and shall be constructed of hollow open-end units or two wythes of solid units.

TABLE 606.12.3.2
MINIMUM DISTRIBUTED WALL REINFORCEMENT FOR BUILDING ASSIGNED TO SEISMIC DESIGN CATEGORY D_0 or D_1

NOMINAL WALL THICKNESS (inches)	MINIMUM SUM OF THE VERTICAL AND HORIZONTAL REINFORCEMENT AREAS[a] (square inches per foot)	MINIMUM REINFORCEMENT AS DISTRIBUTED IN BOTH HORIZONTAL AND VERTICAL DIRECTIONS[b] (square inches per foot)	MINIMUM BAR SIZE FOR REINFORCEMENT SPACED AT 48 INCHES
6	0.135	0.047	#4
8	0.183	0.064	#5
10	0.231	0.081	#6
12	0.279	0.098	#6

For SI: 1 inch = 25.4 mm, 1 foot = 304.8 mm, 1 square inch per foot = 2064 mm^2/m.
a. Based on the minimum reinforcing ratio of 0.002 times the gross cross-sectional area of the wall.
b. Based on the minimum reinforcing ratio each direction of 0.0007 times the gross cross-sectional area of the wall.

TABLE 606.12.4.1
MINIMUM REINFORCING FOR STACKED BONDED MASONRY WALLS IN SEISMIC DESIGN CATEGORY D_2

NOMINAL WALL THICKNESS (inches)	MINIMUM BAR SIZE SPACED AT 24 INCHES
6	#4
8	#5
10	#5
12	#6

For SI: 1 inch = 25.4 mm.

606.12.4.2 Design of elements part of the lateral-force-resisting system. Stack bond masonry that is part of the lateral-force-resisting system shall have a horizontal cross-sectional area of reinforcement of at least 0.0025 times the gross cross-sectional area of masonry. Table 606.12.4.2 shows minimum reinforcing bar sizes for masonry walls. The maximum spacing of horizontal reinforcement shall be 16 inches (406 mm). These elements shall be solidly grouted and shall be constructed of hollow open-end units or two wythes of solid units.

TABLE 606.12.4.2
MINIMUM REINFORCING FOR STACKED BONDED MASONRY WALLS IN SEISMIC DESIGN CATEGORY D_2

NOMINAL WALL THICKNESS (inches)	MINIMUM BAR SIZE SPACED AT 16 INCHES
6	#4
8	#5
10	#5
12	#6

For SI: 1 inch = 25.4 mm.

606.13 Protection for reinforcement. Bars shall be completely embedded in mortar or grout. Joint reinforcement embedded in horizontal mortar joints shall not have less than $^{5}/_{8}$-inch (15.9 mm) mortar coverage from the exposed face. All other reinforcement shall have a minimum coverage of one bar diameter over all bars, but not less than ¾ inch (19 mm), except where exposed to weather or soil, in which case the minimum coverage shall be 2 inches (51 mm).

606.14 Beam supports. Beams, girders or other concentrated loads supported by a wall or column shall have a bearing of at least 3 inches (76 mm) in length measured parallel to the beam upon solid masonry not less than 4 inches (102 mm) in thickness, or upon a metal bearing plate of adequate design and dimensions to distribute the load safely, or upon a continuous reinforced masonry member projecting not less than 4 inches (102 mm) from the face of the wall.

606.14.1 Joist bearing. Joists shall have a bearing of not less than 1½ inches (38 mm), except as provided in Section 606.14, and shall be supported in accordance with Figure 606.11(1).

606.15 Metal accessories. Joint reinforcement, anchors, ties and wire fabric shall conform to the following: ASTM A 82 for wire anchors and ties; ASTM A 36 for plate, headed and bent-bar anchors; ASTM A 510 for corrugated sheet metal anchors and ties; ASTM A 951 for joint reinforcement; ASTM B 227 for copper-clad steel wire ties; or ASTM A 167 for stainless steel hardware.

606.15.1 Corrosion protection. Minimum corrosion protection of joint reinforcement, anchor ties and wire fabric for use in masonry wall construction shall conform to Table 606.15.1.

TABLE 606.15.1
MINIMUM CORROSION PROTECTION

MASONRY METAL ACCESSORY	STANDARD
Joint reinforcement, interior walls	ASTM A 641, Class 1
Wire ties or anchors in exterior walls completely embedded in mortar or grout	ASTM A 641, Class 3
Wire ties or anchors in exterior walls not completely embedded in mortar or grout	ASTM A 153, Class B-2
Joint reinforcement in exterior walls or interior walls exposed to moist environment	ASTM A 153, Class B-2
Sheet metal ties or anchors exposed to weather	ASTM A 153, Class B-2
Sheet metal ties or anchors completely embedded in mortar or grout	ASTM A 653, Coating Designation G60
Stainless steel hardware for any exposure	ASTM A 167, Type 304

SECTION 607
UNIT MASONRY

607.1 Mortar. Mortar for use in masonry construction shall comply with ASTM C 270. The type of mortar shall be in accordance with Sections 607.1.1, 607.1.2 and 607.1.3 and shall meet the proportion specifications of Table 607.1 or the property specifications of ASTM C 270.

607.1.1 Foundation walls. Masonry foundation walls constructed as set forth in Tables 404.1.1(1) through 404.1.1(4) and mortar shall be Type M or S.

607.1.2 Masonry in Seismic Design Categories A, B and C. Mortar for masonry serving as the lateral-force-resisting system in Seismic Design Categories A, B and C shall be Type M, S or N mortar.

607.1.3 Masonry in Seismic Design Categories D_0, D_1 and D_2. Mortar for masonry serving as the lateral-force-resisting system in Seismic Design Categories D_0, D_1 and D_2 shall be Type M or S portland cement-lime or mortar cement mortar.

607.2 Placing mortar and masonry units.

607.2.1 Bed and head joints. Unless otherwise required or indicated on the project drawings, head and bed joints shall be $^3/_8$ inch (10 mm) thick, except that the thickness of the bed joint of the starting course placed over foundations shall not be less than ¼ inch (7 mm) and not more than ¾ inch (19 mm).

607.2.1.1 Mortar joint thickness tolerance. Mortar joint thickness for load-bearing masonry shall be within the following tolerances from the specified dimensions:

1. Bed joint: + $^1/_8$ inch (3 mm).
2. Head joint: -¼ inch (7 mm), + $^3/_8$ inch (10 mm).
3. Collarjoints: -¼ inch(7mm),+ $^3/_8$ inch(10mm).

TABLE 607.1
MORTAR PROPORTIONS[a, b]

PROPORTIONS BY VOLUME (cementitious materials)										
MORTAR	**TYPE**	**Portland cement or blended cement**	**Mortar cement**			**Masonry cement**			**Hydrated lime[c] or lime putty**	**Aggregate ratio (measured in damp, loose conditions)**
			M	**S**	**N**	**M**	**S**	**N**		
Cement-lime	M	1	—	—	—	—	—	—	¼	Not less than 2¼ and not more than 3 times the sum of separate volumes of lime, if used, and cement
	S	1	—	—	—	—	—	—	over ¼ to ½	
	N	1	—	—	—	—	—	—	over ½ to 1¼	
	O	1	—	—	—	—	—	—	over 1¼ to 2½	
Mortar cement	M	1	—	—	1	—	—	—	—	
	M	—	1	—	—	—	—	—		
	S	½	—	—	1	—	—	—		
	S	—	—	1	—	—	—	—		
	N	—	—	—	1	—	—	—		
	O	—	—	—	1	—	—	—		
Masonry cement	M	1				—	—	1	—	
	M	—				1	—	—		
	S	½				—	—	1		
	S	—				—	1	—		
	N	—				—	—	1		
	O	—				—	—	1		

For SI: 1 cubic foot = 0.0283 m^3, 1 pound = 0.454 kg.

a. For the purpose of these specifications, the weight of 1 cubic foot of the respective materials shall be considered to be as follows:

Portland Cement	94 pounds	Masonry Cement	Weight printed on bag
Mortar Cement	Weight printed on bag	Hydrated Lime	40 pounds
Lime Putty (Quicklime)	80 pounds	Sand, damp and loose	80 pounds of dry sand

b. Two air-entraining materials shall not be combined in mortar.

c. Hydrated lime conforming to the requirements of ASTM C270

607.2.2 Masonry unit placement. The mortar shall be sufficiently plastic and units shall be placed with sufficient pressure to extrude mortar from the joint and produce a tight joint. Deep furrowing of bed joints that produces voids shall not be permitted. Any units disturbed to the extent that initial bond is broken after initial placement shall be removed and relaid in fresh mortar. Surfaces to be in contact with mortar shall be clean and free of deleterious materials.

607.2.2.1 Solid masonry. Solid masonry units shall be laid with full head and bed joints and all interior vertical joints that are designed to receive mortar shall be filled.

607.2.2.2 Hollow masonry. For hollow masonry units, head and bed joints shall be filled solidly with mortar for a distance in from the face of the unit not less than the thickness of the face shell.

607.3 Installation of wall ties. The installation of wall ties shall be as follows:

1. The ends of wall ties shall be embedded in mortar joints. Wall tie ends shall engage outer face shells of hollow units by at least ½ inch (13 mm). Wire wall ties shall be embedded at least 1½ inches (38 mm) into the mortar bed of solid masonry units or solid grouted hollow units.

2. Wall ties shall not be bent after being embedded in grout or mortar.

SECTION 608
MULTIPLE WYTHE MASONRY

608.1 General. The facing and backing of multiple wythe masonry walls shall be bonded in accordance with Section 608.1.1, 608.1.2 or 608.1.3. In cavity walls, neither the facing nor the backing shall be less than 3 inches (76 mm) nominal in thickness and the cavity shall not be more than 4 inches (102 mm) nominal in width. The backing shall be at least as thick as the facing.

Exception: Cavities shall be permitted to exceed the 4-inch (102 mm) nominal dimension provided tie size and tie spacing have been established by calculation.

608.1.1 Bonding with masonry headers. Bonding with solid or hollow masonry headers shall comply with Sections 608.1.1.1 and 608.1.1.2.

608.1.1.1 Solid units. Where the facing and backing (adjacent wythes) of solid masonry construction are bonded by means of masonry headers, no less than 4 percent of the wall surface of each face shall be composed of headers extending not less than 3 inches (76 mm) into the backing. The distance between adjacent full-length headers shall not exceed 24 inches (610 mm) either vertically or horizontally. In walls in which a single header does not extend through the wall, headers from the opposite sides shall overlap at least 3 inches (76 mm), or headers from opposite sides shall be covered with another header course overlapping the header below at least 3 inches (76 mm).

608.1.1.2 Hollow units. Where two or more hollow units are used to make up the thickness of a wall, the stretcher courses shall be bonded at vertical intervals not exceeding 34 inches (864 mm) by lapping at least 3 inches (76 mm) over the unit below, or by lapping at vertical intervals not exceeding

17 inches (432 mm) with units that are at least 50 percent thicker than the units below.

608.1.2 Bonding with wall ties or joint reinforcement. Bonding with wall ties or joint reinforcement shall comply with Sections 608.1.2.1 through 608.1.2.3.

608.1.2.1 Bonding with wall ties. Bonding with wall ties, except as required by Section 610, where the facing and backing (adjacent wythes) of masonry walls are bonded with $^{3}/_{16}$-inch-diameter (5 mm) wall ties embedded in the horizontal mortar joints, there shall be at least one metal tie for each 4.5 square feet (0.418 m^2)of wall area. Ties in alternate courses shall be staggered. The maximum vertical distance between ties shall not exceed 24 inches (610 mm), and the maximum horizontal distance shall not exceed 36 inches (914 mm). Rods or ties bent to rectangular shape shall be used with hollow masonry units laid with the cells vertical. In other walls, the ends of ties shall be bent to 90-degree (0.79 rad) angles to provide hooks no less than 2 inches (51 mm) long. Additional bonding ties shall be provided at all openings, spaced not more than 3 feet (914 mm) apart around the perimeter and within 12 inches (305 mm) of the opening.

608.1.2.2 Bonding with adjustable wall ties. Where the facing and backing (adjacent wythes) of masonry are bonded with adjustable wall ties, there shall be at least one tie for each 2.67 square feet (0.248 m^2) of wall area. Neither the vertical nor the horizontal spacing of the adjustable wall ties shall exceed 24 inches (610 mm). The maximum vertical offset of bed joints from one wythe to the other shall be 1.25 inches (32 mm). The maximum clearance between connecting parts of the ties shall be $^{1}/_{16}$ inch (2 mm). When pintle legs are used, ties shall have at least two $^{3}/_{16}$-inch-diameter (5 mm) legs.

608.1.2.3 Bonding with prefabricated joint reinforcement. Where the facing and backing (adjacent wythes) of masonry are bonded with prefabricated joint reinforcement, there shall be at least one cross wire serving as a tie for each 2.67 square feet (0.248 m^2) of wall area. The vertical spacing of the joint reinforcement shall not exceed 16 inches (406 mm). Cross wires on prefabricated joint reinforcement shall not be smaller than No. 9 gage. The longitudinal wires shall be embedded in the mortar.

608.1.3 Bonding with natural or cast stone. Bonding with natural and cast stone shall conform to Sections 608.1.3.1 and 608.1.3.2.

608.1.3.1 Ashlar masonry. In ashlar masonry, bonder units, uniformly distributed, shall be provided to the extent of not less than 10 percent of the wall area. Such bonder units shall extend not less than 4 inches (102 mm) into the backing wall.

608.1.3.2 Rubble stone masonry. Rubble stone masonry 24 inches (610 mm) or less in thickness shall have bonder units with a maximum spacing of 3 feet (914 mm) vertically and 3 feet (914 mm) horizontally, and if the masonry is of greater thickness than 24 inches (610 mm), shall have one bonder unit for each 6 square feet (0.557 m^2) of wall surface on both sides.

608.2 Masonry bonding pattern. Masonry laid in running and stack bond shall conform to Sections 608.2.1 and 608.2.2.

608.2.1 Masonry laid in running bond. In each wythe of masonry laid in running bond, head joints in successive courses shall be offset by not less than one-fourth the unit length, or the masonry walls shall be reinforced longitudinally as required in Section 608.2.2.

608.2.2 Masonry laid in stack bond. Where unit masonry is laid with less head joint offset than in Section 608.2.1, the minimum area of horizontal reinforcement placed in mortar bed joints or in bond beams spaced not more than 48 inches (1219 mm) apart, shall be 0.0007 times the vertical cross-sectional area of the wall.

SECTION 609
GROUTED MASONRY

609.1 General. Grouted multiple-wythe masonry is a form of construction in which the space between the wythes is solidly filled with grout. It is not necessary for the cores of masonry units to be filled with grout. Grouted hollow unit masonry is a form of construction in which certain cells of hollow units are continuously filled with grout.

609.1.1 Grout. Grout shall consist of cementitious material and aggregate in accordance with ASTM C 476 and the proportion specifications of Table 609.1.1. Type M or Type S mortar to which sufficient water has been added to produce pouring consistency can be used as grout.

609.1.2 Grouting requirements. Maximum pour heights and the minimum dimensions of spaces provided for grout placement shall conform to Table

609.1.2. If the work is stopped for one hour or longer, the horizontal construction joints shall be formed by stopping all tiers at the same elevation and with the grout 1 inch (25 mm) below the top.

609.1.3 Grout space (cleaning). Provision shall be made for cleaning grout space. Mortar projections that project more than 0.5 inch (13 mm) into grout space and any other foreign matter shall be removed from grout space prior to inspection and grouting.

609.1.4 Grout placement. Grout shall be a plastic mix suitable for pumping without segregation of the constituents and shall be mixed thoroughly. Grout shall be placed by pumping or by an approved alternate method and shall be placed before any initial set occurs and in no case more than 1½ hours after water has been added. Grouting shall be done in a continuous pour, in lifts not exceeding 5 feet (1524 mm). It shall be consolidated by puddling or mechanical vibrating during placing and reconsolidated after excess moisture has been absorbed but before plasticity is lost.

609.1.4.1 Grout pumped through aluminum pipes. Grout shall not be pumped through aluminum pipes.

609.1.5 Cleanouts. Where required by the building official, cleanouts shall be provided as specified in this section. The cleanouts shall be sealed before grouting and after inspection.

609.1.5.1 Grouted multiple-wythe masonry. Cleanouts shall be provided at the bottom course of the exterior wythe at each pour of grout where such pour exceeds 5 feet (1524 mm) in height.

609.1.5.2 Grouted hollow unit masonry. Cleanouts shall be provided at the bottom course of each cell to be grouted at each pour of grout, where such pour exceeds 4 feet (1219 mm) in height.

609.2 Grouted multiple-wythe masonry. Grouted multiple-wythe masonry shall conform to all the requirements specified in Section 609.1 and the requirements of this section.

609.2.1 Bonding of backup wythe. Where all interior vertical spaces are filled with grout in multiple-wythe construction, masonry headers shall not be permitted. Metal wall ties shall be used in accordance with Section 608.1.2 to prevent spreading of the wythes and to maintain the vertical alignment of the

wall. Wall ties shall be installed in accordance with Section 608.1.2 when the backup wythe in multiple-wythe construction is fully grouted.

609.2.2 Grout spaces. Fine grout shall be used when interior vertical space to receive grout does not exceed 2 inches (51 mm) in thickness. Interior vertical spaces exceeding 2 inches (51 mm) in thickness shall use coarse or fine grout.

609.2.3 Grout barriers. Vertical grout barriers or dams shall be built of solid masonry across the grout space the entire height of the wall to control the flow of the grout horizontally. Grout barriers shall not be more than 25 feet (7620 mm) apart. The grouting of any section of a wall between control barriers shall be completed in one day with no interruptions greater than one hour.

609.3 Reinforced grouted multiple-wythe masonry. Reinforced grouted multiple-wythe masonry shall conform to all the requirements specified in Sections 609.1 and 609.2 and the requirements of this section.

609.3.1 Construction. The thickness of grout or mortar between masonry units and reinforcement shall not be less than ¼ inch (7 mm), except that ¼-inch (7 mm) bars may be laid in horizontal mortar joints at least ½ inch (13 mm) thick, and steel wire reinforcement may be laid in horizontal mortar joints at least twice the thickness of the wire diameter.

TABLE 609.1.1
GROUT PROPORTIONS BY VOLUME FOR MASONRY CONSTRUCTION

TYPE	PORTLAND CEMENT OR BLENDED CEMENT SLAG CEMENT	HYDRATED LIME OR LIME PUTTY	AGGREGATE MEASURED IN A DAMP, LOOSE CONDITION	
			Fine	Coarse
Fine	1	0 to 1/10	2¼ to 3 times the sum of the volume of the cementitious materials	—
Coarse	1	0 to 1/10	2¼ to 3 times the sum of the volume of the cementitious materials	1 to 2 times the sum of the volumes of the cementitious materials

TABLE 609.1.2
GROUT SPACE DIMENSIONS AND POUR HEIGHTS

GROUT TYPE	GROUT POUR MAXIMUM HEIGHT (feet)	MINIMUM WIDTH OF GROUT SPACES[a,b] (inches)	MINIMUM GROUT[b,c] SPACE DIMENSIONS FOR GROUTING CELLS OF HOLLOW UNITS (inches x inches)
Fine	1	0.75	1.5 × 2
	5	2	2 × 3
	12	2.5	2.5 × 3
	24	3	3 × 3

Coarse	1	1.5	1.5 × 3
	5	2	2.5 × 3
	12	2.5	3 × 3
	24	3	3 × 4

For SI: 1 inch = 25.4 mm, 1 foot = 304.8 mm.
a. For grouting between masonry wythes.
b. Grout space dimension is the clear dimension between any masonry protrusion and shall be increased by the horizontal projection of the diameters of the horizontal bars within the cross section of the grout space.
c. Area of vertical reinforcement shall not exceed 6 percent of the area of the grout space.

609.4 Reinforced hollow unit masonry. Reinforced hollow unit masonry shall conform to all the requirements of Section 609.1 and the requirements of this section.

609.4.1 Construction. Requirements for construction shall be as follows:

1. Reinforced hollow-unit masonry shall be built to preserve the unobstructed vertical continuity of the cells to be filled. Walls and cross webs forming cells to be filled shall be full-bedded in mortar to prevent leakage of grout. Head and end joints shall be solidly filled with mortar for a distance in from the face of the wall or unit not less than the thickness of the longitudinal face shells. Bond shall be provided by lapping units in successive vertical courses.

2. Cells to be filled shall have vertical alignment sufficient to maintain a clear, unobstructed continuous vertical cell of dimensions prescribed in Table 609.1.2.

3. Vertical reinforcement shall be held in position at top and bottom and at intervals not exceeding 200 diameters of the reinforcement.

4. Cells containing reinforcement shall be filled solidly with grout. Grout shall be poured in lifts of 8-foot (2438 mm) maximum height. When a total grout pour exceeds 8 feet (2438 mm) in height, the grout shall be placed in lifts not exceeding 5 feet (1524 mm) and special inspection during grouting shall be required.

5. Horizontal steel shall be fully embedded by grout in an uninterrupted pour.

SECTION 610
GLASS UNIT MASONRY

610.1 General. Panels of glass unit masonry located in load-bearing and nonload-bearing exterior and interior walls shall be constructed in accordance with this section.

610.2 Materials. Hollow glass units shall be partially evacuated and have a minimum average glass face thickness of $^{3}/_{16}$ inch (5 mm). The surface of units in contact with mortar shall be treated with a polyvinyl butyral coating or latex-based paint. The use of reclaimed units is prohibited.

610.3 Units. Hollow or solid glass block units shall be standard or thin units.

610.3.1 Standard units. The specified thickness of standard units shall be at least $3^{7}/_{8}$ inches (98 mm).

610.3.2 Thin units. The specified thickness of thin units shall be at least $3^{1}/_{8}$ inches (79 mm) for hollow units and at least 3 inches (76 mm) for solid units.

610.4 Isolated panels. Isolated panels of glass unit masonry shall conform to the requirements of this section.

610.4.1 Exterior standard-unit panels. The maximum area of each individual standard-unit panel shall be 144 square feet (13.4 m^2) when the design wind pressure is 20 psf (958 Pa). The maximum area of such panels subjected to design wind pressures other than 20 psf (958 Pa) shall be in accordance with Figure 610.4.1. The maximum panel dimension between structural supports shall be 25 feet (7620 mm) in width or 20 feet (6096 mm) in height.

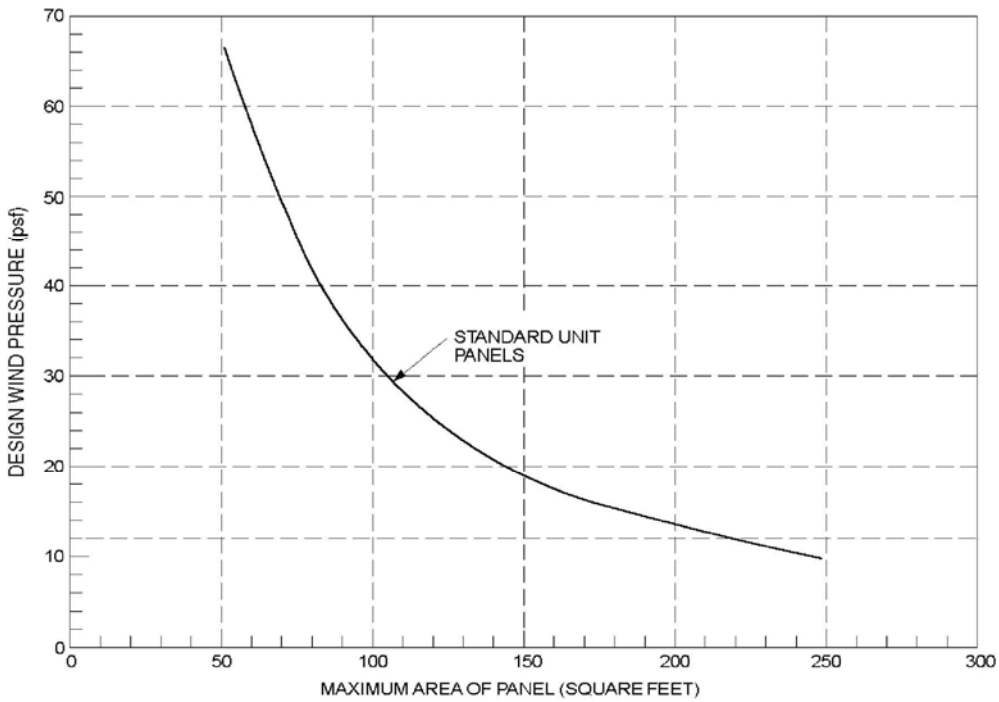

For SI: 1 square foot=0.0929m^2, 1 pound per square foot = 0.0479 kPa.

FIGURE 610.4.1
GLASS UNIT MASONRY DESIGN WIND LOAD RESISTANCE

610.4.2 Exterior thin-unit panels. The maximum area of each individual thin-unit panel shall be 85 square feet (7.9 m^2). The maximum dimension between structural supports shall be 15 feet (4572 mm) in width or 10 feet (3048 mm) in height. Thin units shall not be used in applications where the design wind pressure as stated in Table 301.2(1) exceeds 20 psf (958 Pa).

610.4.3 Interior panels. The maximum area of each individual standard-unit panel shall be 250 square feet (23.2 m^2). The maximum area of each thin-unit panel shall be 150 square feet (13.9 m^2). The maximum dimension between structural supports shall be 25 feet (7620 mm) in width or 20 feet (6096 mm) in height.

610.4.4 Curved panels. The width of curved panels shall conform to the requirements of Sections 610.4.1, 610.4.2 and 610.4.3, except additional

structural supports shall be provided at locations where a curved section joins a straight section, and at inflection points in multicurved walls.

610.5 Panel support. Glass unit masonry panels shall conform to the support requirements of this section.

610.5.1 Deflection. The maximum total deflection of structural members that support glass unit masonry shall not exceed $^{1}/_{600}$.

610.5.2 Lateral support. Glass unit masonry panels shall be laterally supported along the top and sides of the panel. Lateral supports for glass unit masonry panels shall be designed to resist a minimum of 200 pounds per lineal feet (2918 N/m) of panel, or the actual applied loads, whichever is greater. Except for single unit panels, lateral support shall be provided by panel anchors along the top and sides spaced a maximum of 16 inches (406 mm) on center or by channel-type restraints. Single unit panels shall be supported by channel-type restraints.

Exceptions:

1. Lateral support is not required at the top of panels that are one unit wide.

2. Lateral support is not required at the sides of panels that are one unit high.

610.5.2.1 Panel anchor restraints. Panel anchors shall be spaced a maximum of 16 inches (406 mm) on center in both jambs and across the head. Panel anchors shall be embedded a minimum of 12 inches (305 mm) and shall be provided with two fasteners so as to resist the loads specified in Section 610.5.2.

610.5.2.2 Channel-type restraints. Glass unit masonry panels shall be recessed at least 1 inch (25 mm) within channels and chases. Channel-type restraints shall be oversized to accommodate expansion material in the opening, packing and sealant between the framing restraints, and the glass unit masonry perimeter units.

610.6 Sills. Before bedding of glass units, the sill area shall be covered with a water base asphaltic emulsion coating. The coating shall be a minimum of $^{1}/_{8}$ inch (3 mm) thick.

610.7 Expansion joints. Glass unit masonry panels shall be provided with expansion joints along the top and sides at all structural supports. Expansion joints shall be a minimum of $^{3}/_{8}$ inch (10 mm) in thickness and shall have sufficient thickness to accommodate displacements of the supporting structure. Expansion joints shall be entirely free of mortar and other debris and shall be filled with resilient material.

610.8 Mortar. Glass unit masonry shall be laid with Type S or N mortar. Mortar shall not be retempered after initial set. Mortar unused within 1½ hours after initial mixing shall be discarded.

610.9 Reinforcement. Glass unit masonry panels shall have horizontal joint reinforcement spaced a maximum of 16 inches (406 mm) on center located in the mortar bed joint. Horizontal joint reinforcement shall extend the entire length of the panel but shall not extend across expansion joints. Longitudinal wires shall be lapped a minimum of 6 inches (152 mm) at splices. Joint reinforcement shall be placed in the bed joint immediately below and above openings in the panel. The reinforcement shall have not less than two parallel longitudinal wires of size W1.7 or greater, and have welded cross wires of size W1.7 or greater.

610.10 Placement. Glass units shall be placed so head and bed joints are filled solidly. Mortar shall not be furrowed. Head and bed joints of glass unit masonry shall be ¼ inch (6.4 mm) thick, except that vertical joint thickness of radial panels shall not be less than $^{1}/_{8}$ inch (3 mm) or greater than $^{5}/_{8}$ inch (16 mm). The bed joint thickness tolerance shall be minus $^{1}/_{16}$ inch (1.6 mm) and plus $^{1}/_{8}$ inch (3 mm). The head joint thickness tolerance shall be plus or minus $^{1}/_{8}$ inch (3 mm).

SECTION 611
EXTERIOR CONCRETE
WALL CONSTRUCTION

611.1 General. Exterior concrete walls shall be designed and constructed in accordance with the provisions of this section or in accordance with the provisions of PCA 100 or ACI 318.

611.1.1 Interior construction. These provisions are based on the assumption that interior walls and partitions, both load-bearing and nonload-bearing, floors and roof/ceiling assemblies are constructed of light-framed construction complying with the limitations of this code and the additional limitations of Section 611.2. Design and construction of light-framed assemblies shall be in accordance with the applicable provisions of this code. Where second-story

exterior walls are of light-framed construction, they shall be designed and constructed as required by this code.

Aspects of concrete construction not specifically addressed by this code, including interior concrete walls, shall comply with ACI 318.

611.1.2 Other concrete walls. Exterior concrete walls constructed in accordance with this code shall comply with the shapes and minimum concrete cross-sectional dimensions of Table 611.3. Other types of forming systems resulting in concrete walls not in compliance with this section shall be designed in accordance with ACI 318.

611.2 Applicability limits. The provisions of this section shall apply to the construction of exterior concrete walls for buildings not greater than 60 feet (18 288 mm) in plan dimensions, floors with clear spans not greater than 32 feet (9754 mm) and roofs with clear spans not greater than 40 feet (12 192 mm). Buildings shall not exceed 35 feet (10 668 mm) in mean roof height or two stories in height above-grade. Floor/ceiling dead loads shall not exceed 10 pounds per square foot (479 Pa), roof/ceiling dead loads shall not exceed 15 pounds per square foot (718 Pa) and attic live loads shall not exceed 20 pounds per square foot (958 Pa). Roof overhangs shall not exceed 2 feet (610 mm) of horizontal projection beyond the exterior wall and the dead load of the overhangs shall not exceed 8 pounds per square foot (383 Pa).

Walls constructed in accordance with the provisions of this section shall be limited to buildings subjected to a maximum design wind speed of 130 miles per hour (58 m/s) Exposure B, 110 miles per hour (49 m/s) Exposure C and 100 miles per hour (45 m/s) Exposure D. Walls constructed in accordance with the provisions of this section shall be limited to detached one-*,* and two- *and three*-family dwellings and townhouses assigned to Seismic Design Category A or B, and detached one-*,* and two- *and three*-family dwellings assigned to Seismic Design Category C.

Buildings that are not within the scope of this section shall be designed in accordance with PCA 100 or ACI 318.

611.3 Concrete wall systems. Concrete walls constructed in accordance with these provisions shall comply with the shapes and minimum concrete cross-sectional dimensions of Table 611.3.

611.3.1 Flat wall systems. Flat concrete wall systems shall comply with Table 611.3 and Figure 611.3(1) and have a minimum nominal thickness of 4 inches (102 mm).

611.3.2 Waffle-grid wall systems. Waffle-grid wall systems shall comply with Table 611.3 and Figure 611.3(2). and shall have a minimum nominal thickness of 6 inches (152 mm) for the horizontal and vertical concrete members (cores). The core and web dimensions shall comply with Table 611.3. The maximum weight of waffle-grid walls shall comply with Table 611.3.

611.3.3 Screen-grid wall systems. Screen-grid wall systems shall comply with Table 611.3 and Figure 611.3(3) and shall have a minimum nominal thickness of 6 inches (152 mm) for the horizontal and vertical concrete members (cores). The core dimensions shall comply with Table 611.3. The maximum weight of screen-grid walls shall comply with Table 611.3.

611.4 Stay-in-place forms. Stay-in-place concrete forms shall comply with this section.

611.4.1 Surface burning characteristics. The flame spread index and smoke-developed index of forming material, other than foam plastic, left exposed on the interior shall comply with Section 302.9. The surface burning surfaces characteristics of foam plastic used in insulating concrete forms shall comply with Section 316.3.

TABLE 611.3
DIMENSIONAL REQUIREMENTS FOR WALLS[a,b]

WALL TYPE AND NOMINAL THICKNESS	MAXIMUM WALL WEIGHT[c] (psf)	MINIMUM WIDTH, W, OF VERTICAL CORES (inches)	MINIMUM THICKNESS, T, OF VERTICAL CORES (inches)	MAXIMUM SPACING OF VERTICAL CORES (inches)	MAXIMUM SPACING OF HORIZONTAL CORES (inches)	MINIMUM WEB THICKNESS (inches)
4″ Flat[d]	50	N/A	N/A	N/A	N/A	N/A
6″ Flat[d]	75	N/A	N/A	N/A	N/A	N/A
8″ Flat[d]	100	N/A	N/A	N/A	N/A	N/A
10″ Flat[d]	125	N/A	N/A	N/A	N/A	N/A
6″ Waffle-grid	56	8[e]	5.5[e]	12	16	2
8″ Waffle-grid	76	8[f]	8[f]	12	16	2
6″ Screen-grid	53	6.25[g]	6.25[g]	12	12	N/A

For SI: 1 inch = 25.4 mm; 1 pound per square foot = 0.0479kPa, 1 pound per cubic foot = 2402.77 kg/m^3, 1 square inch = 645.16 mm^2.

a. Width "W," thickness "T," spacing and web thickness, refer to Figures 611.3(2) and 611.3(3).

b. N/A indicates not applicable.

c. Wall weight is based on a unit weight of concrete of 150 pcf. For flat walls the weight is based on the nominal thickness. The tabulated values do not include any allowance for interior and exterior finishes.

d. Nominal wall thickness. The actual as-built thickness of a flat wall shall not be more than ½-inch less or more than ¼-inch more than the nominal dimension indicated.

e. Vertical core is assumed to be elliptical-shaped. Another shape core is permitted provided the minimum thickness is 5 inches, the moment of inertia, I, about the centerline of the wall (ignoring the web) is not less than 65 in^4, and the area, A, is not less than 31.25 in^2. The width used to calculate A and I shall not exceed 8 inches.

f. Vertical core is assumed to be circular. Another shape core is permitted provided the minimum thickness is 7 inches, the moment of inertia, I, about the centerline of the wall (ignoring the web) is not less than 200 in^4, and the area, A, is not less than 49 in^2. The width used to calculate A and I shall not exceed 8 inches.

g. Vertical core is assumed to be circular. Another shape core is permitted provided the minimum thickness is 5.5 inches, the moment of inertia, I, about the centerline of the wall is not less than 76 in^4, and the area, A, is not less than 30.25 in^2. The width used to calculate A and I shall not exceed 6.25 inches.

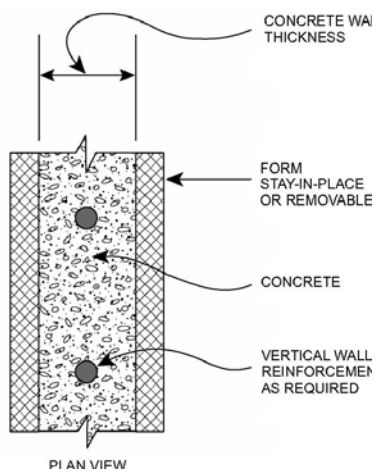

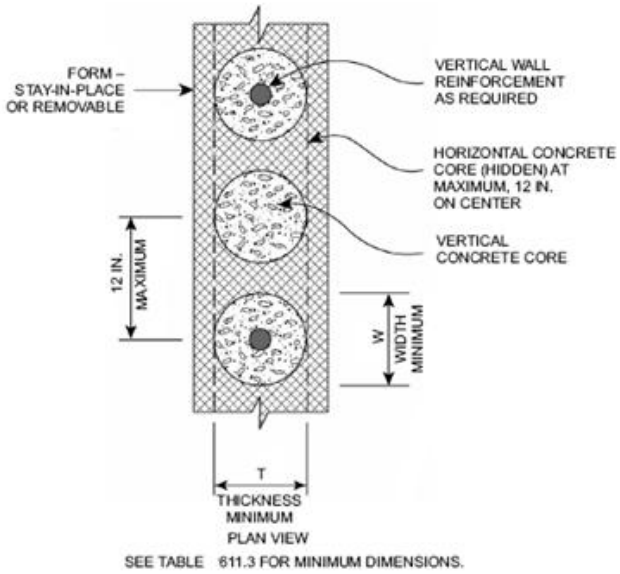

SEE TABLE 611.3 FOR MINIMUM DIMENSIONS

For SI: 1 inch = 25.4 mm.

FIGURE 611.3(1)
FLAT WALL SYSTEM

FIGURE 611.3(2)
WAFFLE-GRID WALL SYSTEM

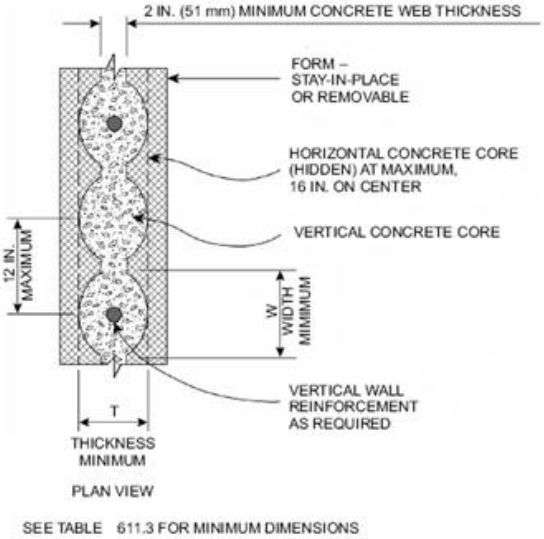

For SI: 1 inch = 25.4 mm.

FIGURE 611.3(3)
SCREEN-GRID WALL SYSTEM

611.4.2 Interior covering. Stay-in-place forms constructed of rigid foam plastic shall be protected on the interior of the building as required by Sections 316.4 and 702.3.4. Where gypsum board is used to protect the foam plastic, it shall be installed with a mechanical fastening system. Use of adhesives is permitted in addition to mechanical fasteners.

611.4.3 Exterior wall covering. Stay-in-place forms constructed of rigid foam plastics shall be protected from sunlight and physical damage by the application of an approved exterior wall covering complying with this code. Exterior of other stay-in-place forming systems shall be protected in accordance with this code.

Requirements for installation of masonry veneer, stucco and other finishes on the exterior of concrete walls and other construction details not covered in this section shall comply with the requirements of this code

611.5 Materials. Materials used in the construction of concrete walls shall comply with this section.

611.5.1 Concrete and materials for concrete. Materials used in concrete, and the concrete itself, shall conform to requirements of this section, or ACI 318.

611.5.1.1 Concrete mixing and delivery. Mixing and delivery of concrete shall comply with ASTM C 94 or ASTM C 685.

611.5.1.2 Maximum aggregate size. The nominal maximum size of coarse aggregate shall not exceed one-fifth the narrowest distance between sides of forms, or three-fourths the clear spacing between reinforcing bars or between a bar and the side of the form.

Exception: When approved, these limitations shall not apply where removable forms are used and workability and methods of consolidation permit concrete to be placed without honeycombs or voids.

611.5.1.3 Proportioning and slump of concrete. Proportions of materials for concrete shall be established to provide workability and consistency to permit concrete to be worked readily into forms and around reinforcement under conditions of placement to be employed, without segregation or excessive bleeding. Slump of concrete placed in removable forms shall not exceed 6 inches (152 mm).

Exception: When approved, the slump is permitted to exceed 6 inches (152 mm) for concrete mixtures that are resistant to segregation, and are in accordance with the form manufacturer's recommendations.

Slump of concrete placed in stay-in-place forms shall exceed 6 inches (152 mm). Slump of concrete shall be determined in accordance with ASTM C 143.

611.5.1.4 Compressive strength. The minimum specified compressive strength of concrete, *f'*, shall comply with Section 402.2 and shall be not less than 2,500 pounds per square inch (17.2 MPa) at 28 days.

611.5.1.5 Consolidation of concrete. Concrete shall be consolidated by suitable means during placement and shall be worked around embedded items and reinforcement and into corners of forms. Where stay-in-place forms are used, concrete shall be consolidated by internal vibration.

Exception: When approved, self-consolidating concrete mixtures with slumps equal to or greater than 8 inches (203 mm) that are specifically designed for placement without internal vibration need not be internally vibrated.

611.5.2 Steel reinforcement and anchor bolts.

611.5.2.1 Steel reinforcement. Steel reinforcement shall comply with ASTM A 615, A 706, or A 996. ASTM A 996 bars produced from rail steel shall be Type R.

611.5.2.2 Anchor bolts. Anchor bolts for use with connection details in accordance with Figures 611.9(1) through 611.9(12) shall be bolts with heads complying with ASTM A 307 or ASTM F 1554. ASTM A 307 bolts shall be Grade A (i.e., with heads). ASTM F 1554 bolts shall be Grade 36 minimum. Instead of bolts with heads, it is permissible to use rods with threads on both ends fabricated from steel complying with ASTM A 36. The threaded end of the rod to be embedded in the concrete shall be provided with a hex or square nut.

611.5.2.3 Sheet steel angles and tension tie straps. Angles and tension tie straps for use with connection details in accordance with Figures 611.9(1) through 611.9(12) shall be fabricated from sheet steel complying with ASTM A 653 SS, ASTM A 792 SS, or ASTM A 875 SS. The steel shall be

minimum Grade 33 unless a higher grade is required by the applicable figure.

611.5.3 Form materials and form ties. Forms shall be made of wood, steel, aluminum, plastic, a composite of cement and foam insulation, a composite of cement and wood chips, or other approved material suitable for supporting and containing concrete. Forms shall provide sufficient strength to contain concrete during the concrete placement operation.

Form ties shall be steel, solid plastic, foam plastic, a composite of cement and wood chips, a composite of cement and foam plastic, or other suitable material capable of resisting the forces created by fluid pressure of fresh concrete.

611.5.4 Reinforcement installation details.

611.5.4.1 Support and cover. Reinforcement shall be secured in the proper location in the forms with tie wire or other bar support system such that displacement will not occur during the concrete placement operation. Steel reinforcement in concrete cast against the earth shall have a minimum cover of 3 inches (76 mm). Minimum cover for reinforcement in concrete cast in removable forms that will be exposed to the earth or weather shall be 1½ inches (38 mm) for No. 5 bars and smaller, and 2 inches (50 mm) for No. 6 bars and larger. For concrete cast in removable forms that will not be exposed to the earth or weather, and for concrete cast in stay-in-place forms, minimum cover shall be ¾ inch (19 mm). The minus tolerance for cover shall not exceed the smaller of one-third the required cover and $^{3}/_{8}$ inch (10 mm). See Section 611.5.4.4 for cover requirements for hooks of bars developed in tension.

611.5.4.2 Location of reinforcement in walls. For location of reinforcement in foundation walls and above-grade walls, see Sections 404.1.2.3.7.2 and 611.6.5, respectively.

611.5.4.3 Lap splices. Vertical and horizontal wall reinforcement required by Sections 611.6 and 611.7 shall be the longest lengths practical. Where splices are necessary in reinforcement, the length of lap splices shall be in accordance with Table 611.5.4(1) and Figure 611.5.4 (1). The maximum gap between noncontact parallel bars at a lap splice shall not exceed the smaller of one-fifth the required lap length and 6 inches (152 mm). See Figure 611.5.4(1).

611.5.4.4 Development of bars in tension. Where bars are required to be developed in tension by other provisions of this code, development lengths and cover for hooks and bar extensions shall comply with Table 611.5.4(1) and Figure 611.5.4 (2). The development lengths shown in Table 611.5.4(1) also apply to bundled bars in lintels installed in accordance with Section 611.8.2.2.

611.5.4.5 Standard hooks. Where reinforcement is required by this code to terminate with a standard hook, the hook shall comply with Figure 611.5.4(3).

611.5.4.6 Webs of waffle-grid walls. Reinforcement, including stirrups, shall not be placed in webs of waffle-grid walls, including lintels. Webs are permitted to have form ties.

611.5.4.7 Alternate grade of reinforcement and spacing. Where tables in Sections 404.1.2 and 611.6 specify vertical wall reinforcement based on minimum bar size and maximum spacing, which are based on Grade 60 (420 MPa) steel reinforcement, different size bars and/or bars made from a different grade of steel are permitted provided an equivalent area of steel per linear foot of wall is provided. Use of Table 611.5.4(2) is permitted to determine the maximum bar spacing for different bar sizes than specified in the tables and/or bars made from a different grade of steel. Bars shall not be spaced less than one-half the wall thickness, or more than 48 inches (1219 mm) on center.

611.5.5 Construction joints in walls. Construction joints shall be made and located to not impair the strength of the wall. Construction joints in plain concrete walls, including walls required to have not less than No. 4 bars at 48 inches (1219 mm) on center by Section 611.6, shall be located at points of lateral support, and a minimum of one No. 4 bar shall extend across the construction joint at a spacing not to exceed 24 inches (610 mm) on center. Construction joint reinforcement shall have a minimum of 12 inches (305 mm) embedment on both sides of the joint. Construction joints in reinforced concrete walls shall be located in the middle third of the span between lateral supports, or located and constructed as required for joints in plain concrete walls.

Exception: Vertical wall reinforcement required by this code is permitted to be used in lieu of construction joint reinforcement, provided the spacing does not exceed 24 inches (610 mm), or the combination of wall

reinforcement and No. 4 bars described above does not exceed 24 inches (610 mm).

611.6 Above-grade wall requirements.

611.6.1 General. The minimum thickness of load-bearing and nonload-bearing above-grade walls and reinforcement shall be as set forth in the appropriate table in this section based on the type of wall form to be used. Where the wall or building is not within the limitations of Section 611.2, design is required by the tables in this section, or the wall is not within the scope of the tables in this section, the wall shall be designed in accordance with ACI 318.

Above-grade concrete walls shall be constructed in accordance with this section and Figure 611.6(1), 611.6(2), 611.6(3), or 611.6(4). Above-grade concrete walls that are continuous with stem walls and not laterally supported by the slab-on-ground shall be designed and constructed in accordance with this section. Concrete walls shall be supported on continuous foundation walls or slabs-on-ground that are monolithic with the footing in accordance with Section 403. The minimum length of solid wall without openings shall be in accordance with Section 611.7. Reinforcement around openings, including lintels, shall be in accordance with Section 611.8. Lateral support for above-grade walls in the out-of-plane direction shall be provided by connections to the floor framing system, if applicable, and to ceiling and roof framing systems in accordance with Section 611.9. The wall thickness shall be equal to or greater than the thickness of the wall in the story above.

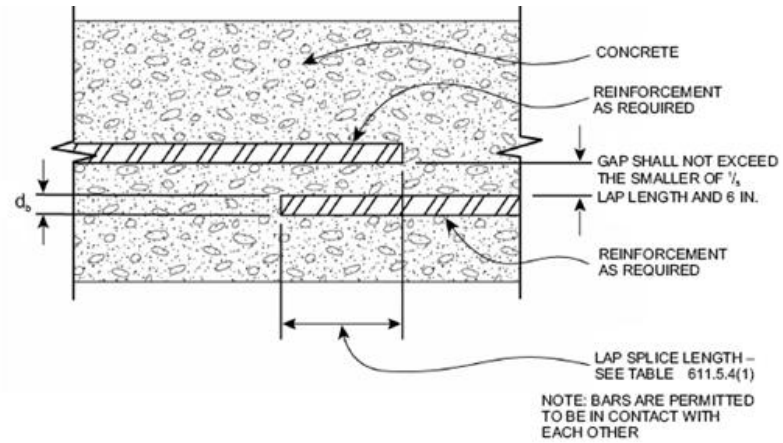

For SI: 1 inch = 25.4 mm.

FIGURE 611.5.4(1)
LAP SPLICES

TABLE 611.5.4(1)
LAP SPLICE AND TENSION DEVELOPMENT LENGTHS

	BAR SIZE NO.	YIELD STRENGTH OF STEEL, f_y - psi (MPa)	
		40,000 (280)	60,000 (420)
		Splice length or tension development length (inches)	
Lap splice length–tension	4	20	30
	5	25	38
	6	30	45
Tension development length for straight bar	4	15	23
	5	19	28
	6	23	34
Tension development length for: a. 90-degree and 180-degree standard hooks with not less than 2½ inches of side cover perpendicular to plane of hook, and b. 90-degree standard hooks with not less than 2 inches of cover on the bar extension beyond the hook.	4	6	9
	5	7	11
	6	8	13
Tension development length for bar with 90-degree or 180-degree standard hook having less cover than required above.	4	8	12
	5	10	15
	6	12	18

For SI: 1 inch = 25.4 mm, 1 degree = 0.0175 rad.

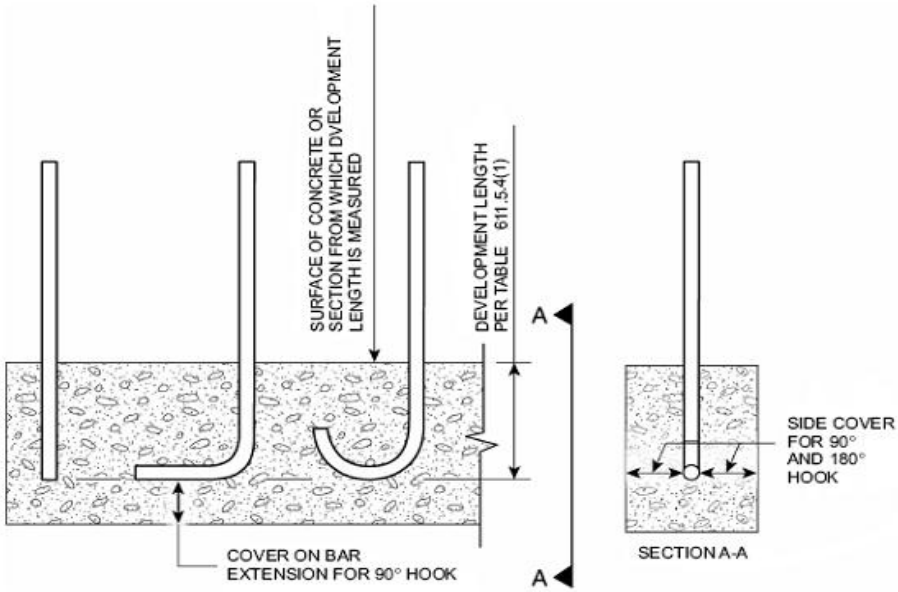

For SI: 1 degree = 0.0175 rad.

FIGURE 611.5.4(2)
DEVELOPMENT LENGTH AND COVER FOR HOOKS AND BAR EXTENSION

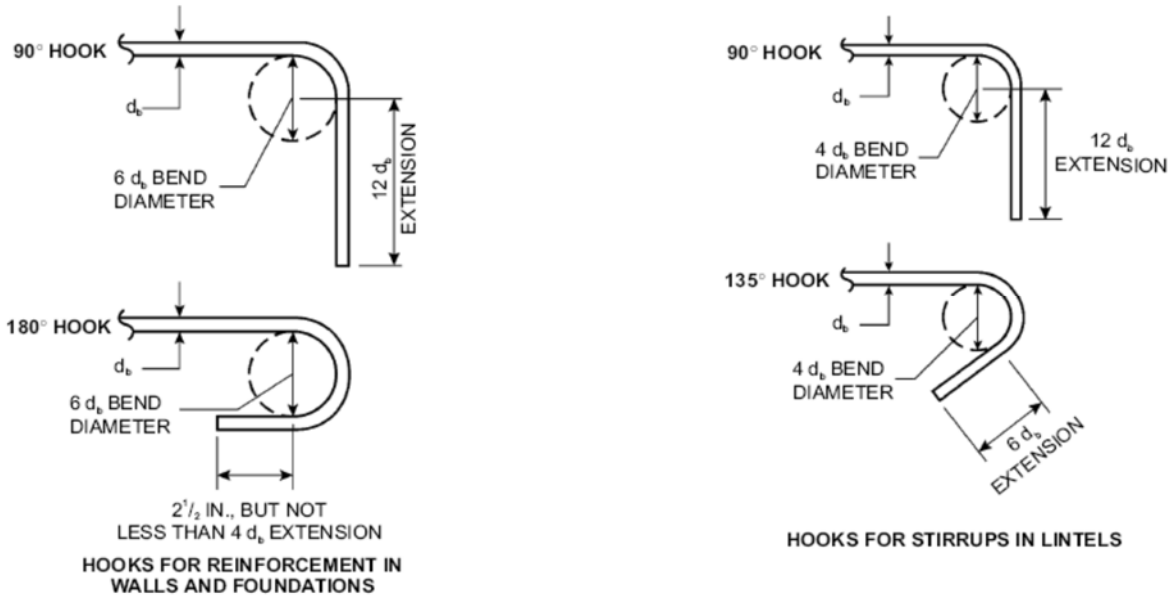

For SI: 1 inch = 25.4 mm, 1 degree = 0.0175 rad.

FIGURE 611.5.4(3)
STANDARD HOOKS

TABLE 611.5.4(2)
MAXIMUM SPACING FOR ALTERNATE BAR SIZE AND/OR ALTERNATE GRADE OF STEEL[a, b, c]

BAR SPACING FROM APPLICABLE TABLE IN SECTION 611.6 (inches)	BAR SIZE FROM APPLICABLE TABLE IN SECTION 611.6														
	#4					#5					#6				
	Alternate bar size and/or alternate grade of steel desired														
	Grade 60		Grade 40			Grade 60		Grade 40			Grade 60		Grade 40		
	#5	#6	#4	#5	#6	#4	#6	#4	#5	#6	#4	#5	#4	#5	#6
	Maximum spacing for alternate bar size and/or alternate grade of steel (inches)														
8	12	18	5	8	12	5	11	3	5	8	4	6	2	4	5
9	14	20	6	9	13	6	13	4	6	9	4	6	3	4	6
10	16	22	7	10	15	6	14	4	7	9	5	7	3	5	7
11	17	24	7	11	16	7	16	5	7	10	5	8	3	5	7
12	19	26	8	12	18	8	17	5	8	11	5	8	4	6	8
13	20	29	9	13	19	8	18	6	9	12	6	9	4	6	9
14	22	31	9	14	21	9	20	6	9	13	6	10	4	7	9
15	23	33	10	16	22	10	21	6	10	14	7	11	5	7	10
16	25	35	11	17	23	10	23	7	11	15	7	11	5	8	11
17	26	37	11	18	25	11	24	7	11	16	8	12	5	8	11
18	28	40	12	19	26	12	26	8	12	17	8	13	5	8	12
19	29	42	13	20	28	12	27	8	13	18	9	13	6	9	13

20	31	44	13	21	29	13	28	9	13	19	9	14	6	9	13
21	33	46	14	22	31	14	30	9	14	20	10	15	6	10	14
22	34	48	15	23	32	14	31	9	15	21	10	16	7	10	15
23	36	48	15	24	34	15	33	10	15	22	10	16	7	11	15
24	37	48	16	25	35	15	34	10	16	23	11	17	7	11	16
25	39	48	17	26	37	16	35	11	17	24	11	18	8	12	17
26	40	48	17	27	38	17	37	11	17	25	12	18	8	12	17
27	42	48	18	28	40	17	38	12	18	26	12	19	8	13	18
28	43	48	19	29	41	18	40	12	19	26	13	20	8	13	19
29	45	48	19	30	43	19	41	12	19	27	13	20	9	14	19
30	47	48	20	31	44	19	43	13	20	28	14	21	9	14	20
31	48	48	21	32	45	20	44	13	21	29	14	22	9	15	21
32	48	48	21	33	47	21	45	14	21	30	15	23	10	15	21
33	48	48	22	34	48	21	47	14	22	31	15	23	10	16	22
34	48	48	23	35	48	22	48	15	23	32	15	24	10	16	23
35	48	48	23	36	48	23	48	15	23	33	16	25	11	16	23
36	48	48	24	37	48	23	48	15	24	34	16	25	11	17	24
37	48	48	25	38	48	24	48	16	25	35	17	26	11	17	25
38	48	48	25	39	48	25	48	16	25	36	17	27	12	18	25
39	48	48	26	40	48	25	48	17	26	37	18	27	12	18	26
40	48	48	27	41	48	26	48	17	27	38	18	28	12	19	27
41	48	48	27	42	48	26	48	18	27	39	19	29	12	19	27
42	48	48	28	43	48	27	48	18	28	40	19	30	13	20	28
43	48	48	29	44	48	28	48	18	29	41	20	30	13	20	29
44	48	48	29	45	48	28	48	19	29	42	20	31	13	21	29
45	48	48	30	47	48	29	48	19	30	43	20	32	14	21	30
46	48	48	31	48	48	30	48	20	31	44	21	32	14	22	31
47	48	48	31	48	48	30	48	20	31	44	21	33	14	22	31
48	48	48	32	48	48	31	48	21	32	45	22	34	15	23	32

For SI: 1 inch = 25.4 mm.

a. This table is for use with tables in Section 611.6 that specify the minimum bar size and maximum spacing of vertical wall reinforcement for foundation walls and above-grade walls. Reinforcement specified in tables in Section 611.6 is based on Grade 60 (420 MPa) steel reinforcement.

b. Bar spacing shall not exceed 48 inches on center and shall not be less than one-half the nominal wall thickness.

c. For Grade 50 (350 MPa) steel bars (ASTM A 996, Type R), use spacing for Grade 40 (280 MPa) bars or interpolate between Grade 40 (280 MPa) and Grade 60 (420 MPa).

611.6.2 Wall reinforcement for wind. Vertical wall reinforcement for resistance to out-of-plane wind forces shall be determined from Table 611.6(1), 611.6(2), 611.6(3) or 611.6(4). Also, see Sections 611.7.2.2.2 and 611.7.2.2.3. There shall be a vertical bar at all corners of exterior walls. Unless more horizontal reinforcement is required by Section 611.7.2.2.1, the minimum horizontal reinforcement shall be four No. 4 bars [Grade 40 (280 MPa)] placed

as follows: top bar within 12 inches (305 mm) of the top of the wall, bottom bar within 12 inches (305 mm) of the finish floor, and one bar each at approximately one-third and two-thirds of the wall height.

611.6.3 Continuity of wall reinforcement between stories. Vertical reinforcement required by this section shall be continuous between elements providing lateral support for the wall. Reinforcement in the wall of the story above shall be continuous with the reinforcement in the wall of the story below, or the foundation wall, if applicable. Lap splices, where required, shall comply with Section 611.5.4.3 and Figure 611.5.4(1). Where the above-grade wall is supported by a monolithic slab-on-ground and footing, dowel bars with a size and spacing to match the vertical above-grade concrete wall reinforcement shall be embedded in the monolithic slab-on-ground and footing the distance required to develop the dowel bar in tension in accordance with Section 611.5.4.4 and Figure 611.5.4(2) and lap-spliced with the above-grade wall reinforcement in accordance with Section 611.5.4.3 and Figure 611.5.4(1).

Exception: Where reinforcement in the wall above cannot be made continuous with the reinforcement in the wall below, the bottom of the reinforcement in the wall above shall be terminated in accordance with one of the following:

1. Extend below the top of the floor the distance required to develop the bar in tension in accordance with Section 611.5.4.4 and Figure 611.5.4(2).

2. Lap-spliced in accordance with Section 611.5.4.3 and Figure 611.5.4(1) with a dowel bar that extends into the wall below the distance required to develop the bar in tension in accordance with Section 611.5.4.4 and Figure 611.5.4(2).

Where a construction joint in the wall is located below the level of the floor and less than the distance required to develop the bar in tension, the distance required to develop the bar in tension shall be measured from the top of the concrete below the joint. See Section 611.5.5.

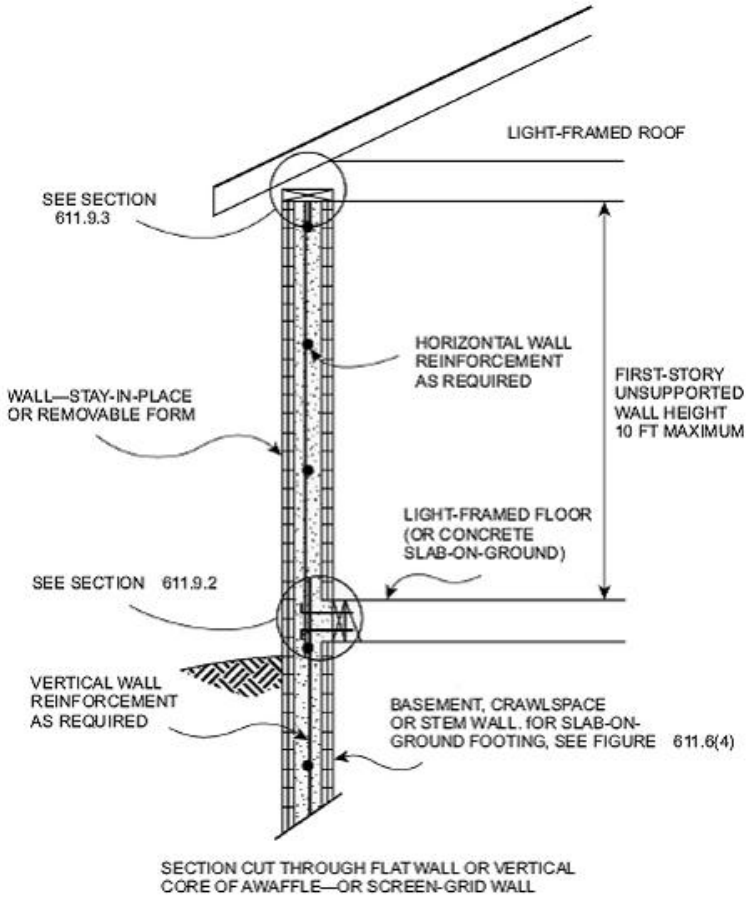

For SI: 1 foot = 304.8 mm.

FIGURE 611.6(1)
ABOVE-GRADE CONCRETE WALL CONSTRUCTION ONE

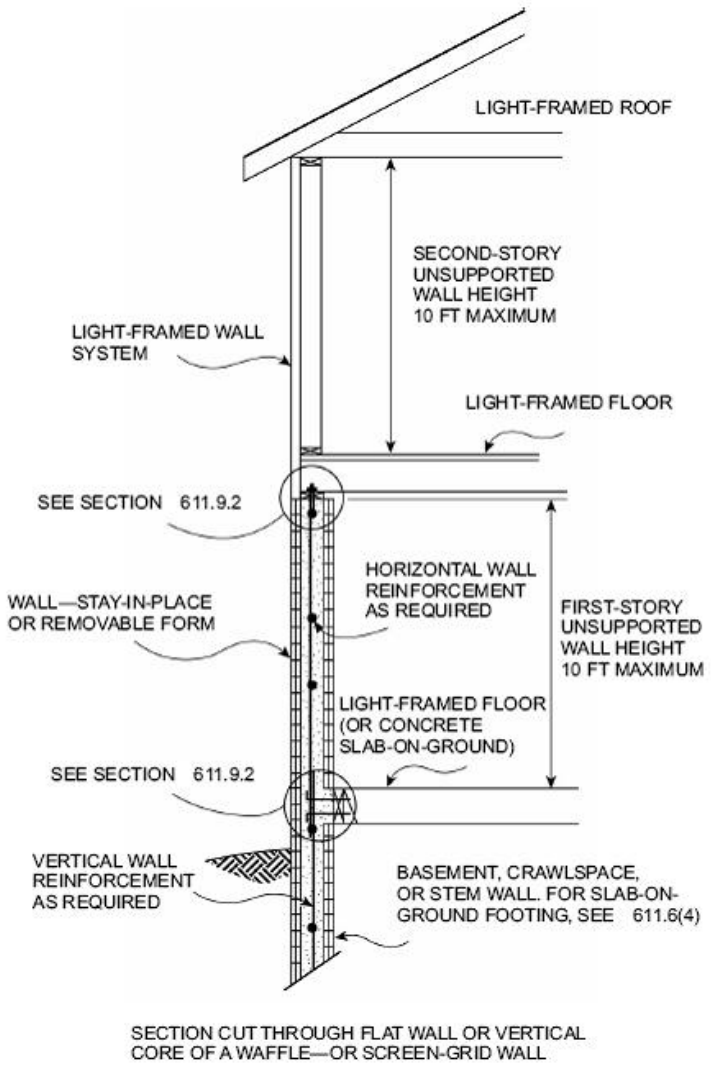

For SI: 1 foot = 304.8 mm.

FIGURE 611.6(2)
ABOVE-GRADE CONCRETE WALL CONSTRUCTION CONCRETE FIRST-STORY AND LIGHT-FRAMED SECOND-STORY

611.6.4 Termination of reinforcement. Where indicated in items 1 through 3 below, vertical wall reinforcement in the top-most story with concrete walls shall be terminated with a 90-degree (1.57 rad) standard hook complying with Section 611.5.4.5 and Figure 611.5.4(3).

1. Vertical bars adjacent to door and window openings required by Section 611.8.1.2.

2. Vertical bars at the ends of required solid wall segments. See Section 611.7.2.2.2.

3. Vertical bars (other than end bars – see item 2) used as shear reinforcement in required solid wall segments where the reduction factor for design strength, R3, used is based on the wall having horizontal and vertical shear reinforcement. See Section 611.7.2.2.3.

The bar extension of the hook shall be oriented parallel to the horizontal wall reinforcement and be within 4 inches (102 mm) of the top of the wall.

Horizontal reinforcement shall be continuous around the building corners by bending one of the bars and lap-splicing it with the bar in the other wall in accordance with Section 611.5.4.3 and Figure 611.5.4(1).

Exception: In lieu of bending horizontal reinforcement at corners, separate bent reinforcing bars shall be permitted provided that the bent bar is lap-spliced with the horizontal reinforcement in both walls in accordance with Section 611.5.4.3 and Figure 611.5.4(1).

In required solid wall segments where the reduction factor for design strength, R3, is based on the wall having horizontal and vertical shear reinforcement in accordance with Section 611.7.2.2.1, horizontal wall reinforcement shall be terminated with a standard hook complying with Section 611.5.4.5 and Figure 611.5.4(3) or in a lap-splice, except at corners where the reinforcement shall be continuous as required above.

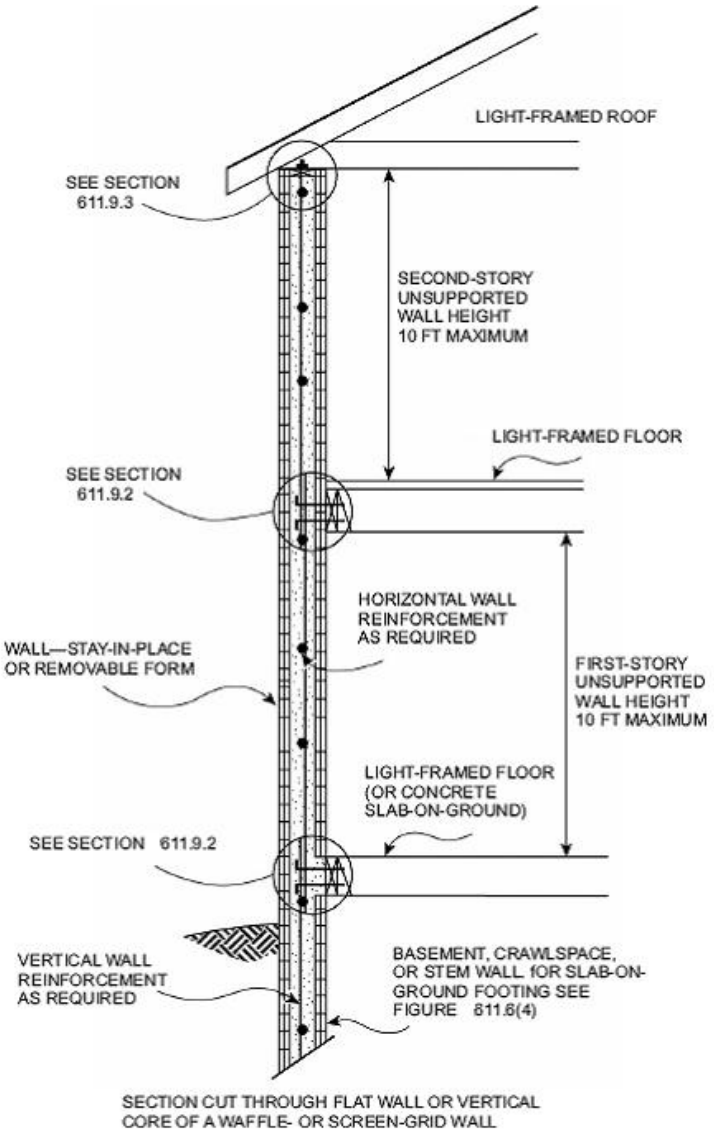

For SI: 1 foot = 304.8 mm.

FIGURE 611.6(3)
ABOVE-GRADE CONCRETE WALL CONSTRUCTION TWO-STORY

611.6.5 Location of reinforcement in wall. Except for vertical reinforcement at the ends of required solid wall segments, which shall be located as required by Section 611.7.2.2.2, the location of the vertical reinforcement shall not vary from the center of the wall by more than the greater of 10 percent of the wall

thickness and $^{3}/_{8}$-inch (10 mm). Horizontal and vertical reinforcement shall be located to provide not less than the minimum cover required by Section 611.5.4.1.

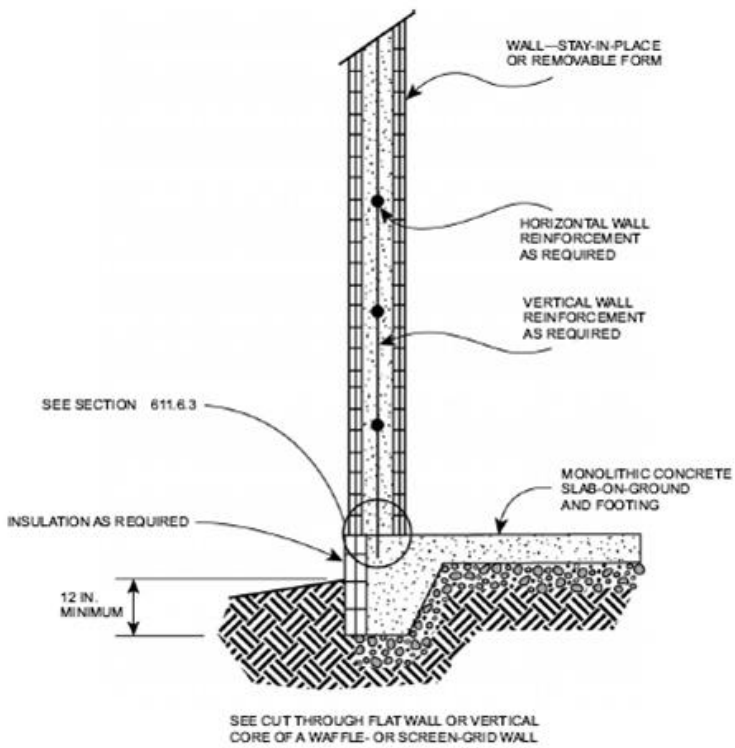

For SI: 1 inch = 25.4 mm.

FIGURE 611.6(4)
ABOVE-GRADE CONCRETE WALL SUPPORTED ON MONOLITHIC SLAB-ON GROUND FOOTING

TABLE 611.6(1)
MINIMUM VERTICAL REINFORCEMENT FOR FLAT ABOVE-GRADE WALLS[a, b, c, d, e]

MAXIMUM WIND SPEED (mph)			MAXIMUM UNSUPPORTED WALL HEIGHT PER STORY (feet)	MINIMUM VERTICAL REINFORCEMENT—BAR SIZE AND SPACING (inches)[f, g]							
				Nominal[h] wall thickness (inches)							
Exposure Category				4		6		8		10	
B	C	D		Top[i]	Side[i]	Top[i]	Side[i]	Top[i]	Side[i]	Top[i]	Side[i]
85	—	—	8	4@48	4@48	4@48	4@48	4@48	4@48	4@48	4@48
			9	4@48	4@43	4@48	4@48	4@48	4@48	4@48	4@48
			10	4@47	4@36	4@48	4@48	4@48	4@48	4@48	4@48
90	—	—	8	4@48	4@47	4@48	4@48	4@48	4@48	4@48	4@48
			9	4@48	4@39	4@48	4@48	4@48	4@48	4@48	4@48
			10	4@42	4@34	4@48	4@48	4@48	4@48	4@48	4@48
100	85	—	8	4@48	4@40	4@48	4@48	4@48	4@48	4@48	4@48
			9	4@42	4@34	4@48	4@48	4@48	4@48	4@48	4@48
			10	4@34	4@34	4@48	4@48	4@48	4@48	4@48	4@48
110	90	85	8	4@44	4@34	4@48	4@48	4@48	4@48	4@48	4@48
			9	4@34	4@34	4@48	4@48	4@48	4@48	4@48	4@48
			10	4@34	4@31	4@48	4@37	4@48	4@48	4@48	4@48
120	100	90	8	4@36	4@34	4@48	4@48	4@48	4@48	4@48	4@48
			9	4@34	4@32	4@48	4@38	4@48	4@48	4@48	4@48
			10	4@30	4@27	4@48	5@48	4@48	4@48	4@48	4@48
130	110	100	8	4@34	4@34	4@48	4@48	4@48	4@48	4@48	4@48
			9	4@32	4@28	4@48	4@33	4@48	4@48	4@48	4@48
			10	4@26	4@23	4@48	5@43	4@48	4@48	4@48	4@48

For SI:1 inch = 25.4 mm; 1 foot = 304.8 mm; 1 mile per hour = 0.447 m/s, 1 pound per square inch = 1.895kPa.

a. Table is based on ASCE 7 components and cladding wind pressures for an enclosed building using a mean roof height of 35 ft, interior wall area 4, an effective wind area of 10 ft^2, and topographic factor, K_{zt}, and importance factor, I, equal to 1.0.

b. Table is based on concrete with a minimum specified compressive strength of 2,500 psi.

c. See Section 611.6.5 for location of reinforcement in wall.

d. Deflection criterion is $L/240$, where L is the unsupported height of the wall in inches.

e. Interpolation is not permitted.

f. Where No.4 reinforcing bars at a spacing of 48 inches are specified in the table, use of bars with a minimum yield strength of 40,000 psi or 60,000 psi is permitted.

g. Other than for No. 4 bars spaced at 48 inches on center, table values are based on reinforcing bars with a minimum yield strength of 60,000 psi. Vertical reinforcement with a yield strength of less than 60,000 psi and/or bars of a different size than specified in the table are permitted in accordance with Section 611.5.4.7 and Table 611.5.4(2).

h. See Table 611.3 for tolerances on nominal thicknesses.

i. Top means gravity load from roof and/or floor construction bears on top of wall. Side means gravity load from floor construction is transferred to wall from a wood ledger or cold-formed steel track bolted to side of wall. Where floor framing members span parallel to the wall, use of the top bearing condition is permitted.

TABLE 611.6(2)
MINIMUM VERTICAL REINFORCEMENT FOR WAFFLE-GRID ABOVE-GRADE WALLS[a, b, c, d, e]

MAXIMUM WIND SPEED (mph)			MAXIMUM UNSUPPORTED WALL HEIGHT PER STORY (feet)	MINIMUM VERTICAL REINFORCEMENT—BAR SIZE AND SPACING (inches)[f, g]			
				Nominal[h] wall thickness (inches)			
Exposure Category				6		8	
B	C	D		Top[i]	Side[i]	Top[i]	Side[i]
85	—	—	8	4@48	4@36, 5@48	4@48	4@48
			9	4@48	4@30, 5@47	4@48	4@45
			10	4@48	4@26, 5@40	4@48	4@39
90	—	—	8	4@48	4@33, 5@48	4@48	4@48
			9	4@48	4@28, 5@43	4@48	4@42
			10	4@31, 5@48	4@24, 5@37	4@48	4@36
100	85	—	8	4@48	4@28, 5@44	4@48	4@43
			9	4@31, 5@48	4@24, 5@37	4@48	4@36
			10	4@25, 5@39	4@24, 5@37	4@48	4@31, 5@48
110	90	85	8	4@33, 5@48	4@25, 5@38	4@48	4@38
			9	4@26, 5@40	4@24, 5@37	4@48	4@31, 5@48
			10	4@24, 5@37	4@23, 5@35	4@48	4@27, 5@41
120	100	90	8	4@27, 5@42	4@24, 5@37	4@48	4@33, 5@48
			9	4@24, 5@37	4@23, 5@36	4@48	4@27, 5@43
			10	4@23, 5@35	4@19, 5@30	4@48	4@23, 5@36
130	110	100	8	4@24, 5@37	4@24, 5@37	4@48	4@29, 5@45
			9	4@24, 5@37	4@20, 5@32	4@48	4@24, 5@37
			10	4@19, 5@30	4@17, 5@26	4@23, 5@36	4@20, 5@31

For SI: 1 inch = 25.4 mm;1 foot = 304.8 mm; 1 mile per hour = 0.447 m/s, 1 pound per square inch = 6.895kPa.

a. Table is based on ASCE 7 components and cladding wind pressures for an enclosed building using a mean roof height of 35 ft (10 668 mm), interior wall area 4,an effective wind area of 10 ft^2 (0.9 m^2), and topographic factor, K_{zt}, and importance factor, I, equal to 1.0.

b. Table is based on concrete with a minimum specified compressive strength of 2,500 psi (17.2 MPa).

c. See Section 611.6.5 for location of reinforcement in wall.

d. Deflection criterion is $L/240$, where L is the unsupported height of the wall in inches.

e. Interpolation is not permitted.

f. Where No.4 reinforcing bars at a spacing of 48 inches are specified in the table, use of bars with a minimum yield strength of 40,000 psi or 60,000 psi is permitted.

g. Other than for No. 4 bars spaced at 48 inches on center, table values are based on reinforcing bars with a minimum yield strength of 60,000 psi. Maximum spacings shown are the values calculated for the specified bar size. Where the bar used is Grade 60 (420 MPa) and the size specified in the table, the actual spacing in the wall shall not exceed a whole-number multiple of 12 inches (i.e., 12, 24, 36 and 48) that is less than or equal to the tabulated spacing. Vertical reinforcement with a yield strength of less than 60,000 psi and/or bars of a different size than specified in the table are permitted in accordance with Section 611.5.4.7and Table 611.5.4(2).

h. See Table 611.3 for minimum core dimensions and maximum spacing of horizontal and vertical cores.

i. Top means gravity load from roof and/or floor construction bears on top of wall. Side means gravity load from floor construction is transferred to wall from a wood ledger or cold-formed steel track bolted to side of wall. Where floor framing members span parallel to the wall, the top bearing condition is permitted to be used.

TABLE 611.6(3)
MINIMUM VERTICAL REINFORCEMENT FOR 6-INCH SCREEN-GRID ABOVE-GRADE WALLS[a, b, c, d, e]

MAXIMUM WIND SPEED (mph)			MAXIMUM UNSUPPORTED WALL HEIGHT PER STORY (feet)	MINIMUM VERTICAL REINFORCEMENT—BAR SIZE AND SPACING (inches)[f, g]	
				Nominal[h] wall thickness (inches)	
Exposure Category				6	
B	C	D		Top[i]	Side[i]
85	—	—	8	4@48	4@34, 5@48
			9	4@48	4@29, 5@45
			10	4@48	4@25, 5@39
90	—	—	8	4@48	4@31, 5@48
			9	4@48	4@27, 5@41
			10	4@30, 5@47	4@23, 5@35
100	85	—	8	4@48	4@27, 5@42
			9	4@30, 5@47	4@23, 5@35
			10	4@24, 5@38	4@22, 5@34
110	90	85	8	4@48	4@24, 5@37
			9	4@25, 5@38	4@22, 5@34
			10	4@22, 5@34	4@22, 5@34
120	100	90	8	4@26, 5@41	4@22, 5@34
			9	4@22, 5@34	4@22, 5@34
			10	4@22, 6@34	4@19, 5@26
130	110	100	8	4@22, 5@35	4@22, 5@34
			9	4@22, 5@34	4@20, 5@30
			10	4@19, 5@29	4@16, 5@25

For SI: 1 inch = 25.4 mm; 1 foot = 304.8 mm; 1 mph = 0.447 m/s, pound per square inch = 6.895kPa.

a. Table is based on ASCE 7 components and cladding wind pressures for an enclosed building using a mean roof height of 35 ft, interior wall area 4, an effective wind area of 10 ft^2, and topographic factor, K_{zt}, and importance factor, I, equal to 1.0.

b. Table is based on concrete with a minimum specified compressive strength of 2,500 psi.

c. See Section 611.6.5 for location of reinforcement in wall.

d. Deflection criterion is $L/240$, where L is the unsupported height of the wall in inches.

e. Interpolation is not permitted.

f. Where No.4 reinforcing bars at a spacing of 48 inches are specified in the table, use of bars with a minimum yield strength of 40,000 psi or 60,000 psi is permitted.

g. Other than for No. 4 bars spaced at 48 inches on center, table values are based on reinforcing bars with a minimum yield strength of 60,000 psi (420 MPa). Maximum spacings shown are the values calculated for the specified bar size. Where the bar used is Grade 60 and the size specified in the table, the actual spacing in the wall shall not exceed a whole-number multiple of 12 inches (i.e., 12, 24, 36 and 48) that is less than or equal to the tabulated spacing. Vertical reinforcement with a yield strength of less than 60,000 psi and/or bars of a different size than specified in the table are permitted in accordance with Section 611.5.4.7 and Table 611.5.4(2).

h. See Table 611.3 for minimum core dimensions and maximum spacing of horizontal and vertical cores.

i. Top means gravity load from roof and/or floor construction bears on top of wall. Side means gravity load from floor construction is transferred to wall from a wood ledger or cold-formed steel track bolted to side of wall. Where floor framing members span parallel to the wall, use of the top bearing condition is permitted.

TABLE 611.6(4)
MINIMUM VERTICAL REINFORCEMENT FOR FLAT, WAFFLE- AND SCREEN-GRID ABOVE-GRADE WALLS DESIGNED CONTINUOUS WITH FOUNDATION STEM WALLS[a, b, c, d, e, k, l]

MAXIMUM WIND SPEED (mph)			HEIGHT OF STEM WALLh, [i] (feet)	MAXIMUM DESIGN LATERAL SOIL LOAD (psf/ft)	MAXIMUM UNSUPPORTED HEIGHT OF ABOVEGRADE WALL (feet)	MINIMUM VERTICAL REINFORCEMENT—BAR SIZE AND SPACING (inches)[f, g]						
						Wall type and nominal thickness[j] (inches)						
Exposure Category						Flat				Waffle		Screen
B	C	D				4	6	8	10	6	8	6
85	—	—	3	30	8	4@33	4@39	4@48	4@48	4@24	4@28	4@22
					10	4@26	5@48	4@41	4@48	4@19	4@22	4@18
				60	10	4@21	5@40	5@48	4@44	4@16	4@19	4@15
			6	30	10	DR	5@22	6@35	6@43	DR	4@11	DR
				60	10	DR	DR	6@26	6@28	DR	DR	DR
90	—	—	3	30	8	4@30	4@36	4@48	4@48	4@22	4@26	4@21
					10	4@24	5@44	4@38	4@48	4@17	4@21	4@17
				60	10	4@20	5@37	4@48	4@41	4@15	4@18	4@14
			6	30	10	DR	5@21	6@35	6@41	DR	4@10	DR
				60	10	DR	DR	6@26	6@28	DR	DR	DR
100	85	—	3	30	8	4@26	5@48	4@42	4@48	4@19	4@23	4@18
					10	4@20	5@37	4@33	4@41	4@15	4@18	4@14
			6	60	10	4@17	5@34	5@44	4@36	4@13	4@17	4@12
				30	10	DR	5@20	6@35	6@38	DR	4@9	DR
				60	10	DR	DR	6@24	6@28	DR	DR	DR
110	90	85	3	30	8	4@22	5@42	4@37	4@46	4@16	4@20	4@16
					10	4@17	5@34	5@44	4@35	4@12	4@17	4@12
				60	10	4@15	5@34	5@39	5@48	4@11	4@17	4@11
			6	30	10	DR	5@18	6@35	6@35	DR	4@9	DR
				60	10	DR	DR	6@23	6@28	DR	DR	DR
120	100	90	3	30	8	4@19	5@37	5@48	4@40	4@14	4@17	4@14
					10	4@14	5@34	5@38	5@48	4@11	4@17	4@10
				60	10	4@13	5@33	6@48	5@43	4@10	4@16	4@9
			6	30	10	DR	5@16	6@33	6@32	DR	4@8	DR
				60	10	DR	DR	6@22	6@28	DR	DR	DR
130	110	100	3	30	8	4@17	5@34	5@44	4@36	4@12	4@17	4@10
					10	DR	5@32	6@47	5@42	4@9	4@15	DR
				60	10	DR	5@29	6@43	5@39	DR	4@14	DR
			6	30	10	DR	5@15	6@30	6@29	DR	4@7	DR
				60	10	DR	DR	6@21	6@27	DR	DR	DR

For SI: 1 inch = 25.4 mm; 1 foot = 304.8 mm; 1 mile per hour = 0.447 m/s; 1 pound per square foot per foot = 0.1571kPa/m.

a. Table is based on ASCE 7 components and cladding wind pressures for an enclosed building using a mean roof height of 35 ft (10 668 mm), interior wall area 4,an effective wind area of 10 ft^2, and topographic factor, K_{zt}, and importance factor, I, equal to 1.0.

b. Table is based on concrete with a minimum specified compressive strength of 2,500 psi.

c. See Section 611.6.5 for location of reinforcement in wall.

d. Deflection criterion is *L*/240, where L is the height of the wall in inches from the exterior finish ground level to the top of the above-grade wall.
e. Interpolation is not permitted. For intermediate values of basic wind speed, heights of stem wall and above-grade wall, and design lateral soil load, use next higher value.
f. Where No.4 reinforcing bars at a spacing of 48 inches are specified in the table, use of bars with a minimum yield strength of 40,000 psi or 60,000 psi is permitted.
g. Other than for No. 4 bars spaced at 48 inches on center, table values are based on reinforcing bars with a minimum yield strength of 60,000 psi. Maximum spacings shown are the values calculated for the specified bar size. In waffle and screen-grid walls where the bar used is Grade 60 and the size specified in the table, the actual spacing in the wall shall not exceed a whole-number multiple of 12 inches (i.e., 12, 24, 36 and 48) that is less than or equal to the tabulated spacing. Vertical reinforcement with a yield strength of less than 60,000 psi and/or bars of a different size than specified in the table are permitted in accordance with Section 611.5.4.7 and Table 611.5.4(2).
h. Height of stem wall is the distance from the exterior finish ground level to the top of the slab-on-ground.
i. Where the distance from the exterior finish ground level to the top of the slab-on-ground is equal to or greater than 4 feet, the stem wall shall be laterally supported at the top and bottom before backfilling. Where the wall is designed and constructed to be continuous with the above-grade wall, temporary supports bracing the top of the stem wall shall remain in place until the above-grade wall is laterally supported at the top by floor or roof construction.
j. See Table 611.3 for tolerances on nominal thicknesses, and minimum core dimensions and maximum spacing of horizontal and vertical cores for waffle-and screen-grid walls.
k. Tabulated values are applicable to construction where gravity loads bear on top of wall, and conditions where gravity loads from floor construction are transferred to wall from a wood ledger or cold-formed steel track bolted to side of wall. See Tables 611.6(1), 611.6(2) and 611.6(3).
l. DR indicates design required.

611.7 Solid walls for resistance to lateral forces.

611.7.1 Length of solid wall. Each exterior wall line in each story shall have a total length of solid wall required by Section 611.7.1.1. A solid wall is a section of flat, waffle-grid or screen-grid wall, extending the full story height without openings or penetrations, except those permitted by Section 611.7.2. Solid wall segments that contribute to the total length of solid wall shall comply with Section 611.7.2.

611.7.1.1 Length of solid wall for wind. All buildings shall have solid walls in each exterior endwall line (the side of a building that is parallel to the span of the roof or floor framing) and sidewall line (the side of a building that is perpendicular to the span of the roof or floor framing) to resist lateral in-plane wind forces. The site-appropriate basic wind speed and exposure category shall be used in Tables 611.7(1A) through (1C) to determine the unreduced total length, UR, of solid wall required in each exterior endwall line and sidewall line. For buildings with a mean roof height of less than 35 feet (10 668 mm), the unreduced values determined from Tables 611.7(1A) though (1C) is permitted by multiplying by the applicable factor, R1, from Table 611.7(2); however, reduced values shall not be less than the minimum values in Tables 611.7(1A) through (1C). Where the floor-to-ceiling height

of a story is less than 10 feet (3048 mm), the unreduced values determined from Tables 611.7(1A) through (C), including minimum values, is permitted to be reduced by multiplying by the applicable factor, R2, from Table 611.7(3). To account for different design strengths than assumed in determining the values in Tables 611.7(1A) through (1C), the unreduced lengths determined from Tables 611.7(1A) through (1C), including minimum values, are permitted to be reduced by multiplying by the applicable factor, R3, from Table 611.7(4). The reductions permitted by Tables 611.7(2), 611.7(3) and 611.7(4) are cumulative.

The total length of solid wall segments, TL, in a wall line that comply with the minimum length requirements of Section 611.7.2.1 [see Figure 611.7(1)] shall be equal to or greater than the product of the unreduced length of solid wall from Tables 611.7(1A) through (1C), UR and the applicable reduction factors, if any, from Tables 611.7(2), 611.7(3) and 611.7(4) as indicated by Equation 611-1.

$TL \geq R_1 \bullet R_2 \bullet R_3 \bullet UR$ **(Equation 611-1)**

Where

TL = total length of solid wall segments in a wall line that comply with Section 611.7.2.1 [see Figure 611.7(1)], and

R1 = 1.0 or reduction factor for mean roof height from Table 611.7(2),

R2 = 1.0 or reduction factor for floor-to-ceiling wall height from Table 611.7(3),

R3 = 1.0 or reduction factor for design strength from Table 611.7(4), and

UR = unreduced length of solid wall from Tables 611.7(1A) through (1C).

The total length of solid wall in a wall line, *TL*, shall not be less than that provided by two solid wall segments complying with the minimum length requirements of Section 611.7.2.1.

To facilitate determining the required wall thickness, wall type, number and grade of vertical bars at the each end of each solid wall segment, and whether shear reinforcement is required, use of Equation 611-2 is permitted.

$$R_3 \leq \frac{TL}{R_1 \bullet R_2 \bullet R_3 \bullet UR}$$ **Equation 611-2)**

After determining the maximum permitted value of the reduction factor for design strength, R_3, in accordance with Equation 611-2, select a wall type from Table 611.7(4) with R_3 less than or equal to the value calculated.

611.7.2 Solid wall segments. Solid wall segments that contribute to the required length of solid wall shall comply with this section. Reinforcement shall be provided in accordance with Section 611.7.2.2 and Table 611.7(4). Solid wall segments shall extend the full story-height without openings, other than openings for the utilities and other building services passing through the wall. In flat walls and waffle-grid walls, such openings shall have an area of less than 30 square inches (19 355 mm2) with no dimension exceeding 6¼ inches (159 mm), and shall not be located within 6 inches (152 mm) of the side edges of the solid wall segment. In screen-grid walls, such openings shall be located in the portion of the solid wall segment between horizontal and vertical cores of concrete and opening size and location are not restricted provided no concrete is removed.

611.7.2.1 Minimum length of solid wall segment and maximum spacing. Only solid wall segments equal to or greater than 24 inches (610 mm) in length shall be included in the total length of solid wall required by Section 611.7.1. In addition, no more than two solid wall segments equal to or greater than 24 inches (610 mm) in length and less than 48 inches (1219 mm) in length shall be included in the required total length of solid wall. The maximum clear opening width shall be 18 feet (5486 mm). See Figure 611.7(1).

611.7.2.2 Reinforcement in solid wall segments.

611.7.2.2.1 Horizontal shear reinforcement. Where reduction factors for design strength, R_3, from Table 611.7(4) based on horizontal and vertical shear reinforcement being provided are used, solid wall segments shall have horizontal reinforcement consisting of minimum No. 4 bars. Horizontal shear reinforcement shall be the same grade of steel required for the vertical reinforcement at the ends of solid wall segments by Section 611.7.2.2.2.

The spacing of horizontal reinforcement shall not exceed the smaller of one-half the length of the solid wall segment, minus 2 inches (51 mm),

and 18 inches (457 mm). Horizontal shear reinforcement shall terminate in accordance with Section 611.6.4.

611.7.2.2.2 Vertical reinforcement. Vertical reinforcement applicable to the reduction factor(s) for design strength, R_3, from Table 611.7(4) that is used, shall be located at each end of each solid wall segment in accordance with the applicable detail in Figure 611.7(2). The No. 4 vertical bar required on each side of an opening by Section 611.8.1.2 is permitted to be used as reinforcement at the ends of solid wall segments where installed in accordance with the applicable detail in Figure 611.7(2). There shall be not less than two No. 4 bars at each end of solid wall segments located as required by the applicable detail in Figure 611.7(2). One of the bars at each end of solid wall segments shall be deemed to meet the requirements for vertical wall reinforcement required by Section 611.6.

The vertical wall reinforcement at each end of each solid wall segment shall be developed below the bottom of the adjacent wall opening [see Figure 611.7(3)] by one of the following methods:

1. Where the wall height below the bottom of the adjacent opening is equal to or greater than 22 inches (559 mm) for No. 4 or 28 inches (711 mm) for No. 5 vertical wall reinforcement, reinforcement around openings in accordance with Section 611.8.1 shall be sufficient, or

2. Where the wall height below the bottom of the adjacent opening is less than required by Item 1 above, the vertical wall reinforcement adjacent to the opening shall extend into the footing far enough to develop the bar in tension in accordance with Section 611.5.4.4 and Figure 611.5.4(2), or shall be lap-spliced with a dowel that is embedded in the footing far enough to develop the dowel-bar in tension.

611.7.2.2.3 Vertical shear reinforcement. Where reduction factors for design strength, R_3, from Table 611.7(4) based on horizontal and vertical shear reinforcement being provided are used, solid wall segments shall have vertical reinforcement consisting of minimum No. 4 bars. Vertical shear reinforcement shall be the same grade of steel required by Section 611.7.2.2.2 for the vertical reinforcement at the ends of solid wall segments. The spacing of vertical reinforcement

throughout the length of the segment shall not exceed the smaller of one third the length of the segment, and 18 inches (457 mm). Vertical shear reinforcement shall be continuous between stories in accordance with Section 611.6.3, and shall terminate in accordance with Section 611.6.4. Vertical shear reinforcement required by this section is permitted to be used for vertical reinforcement required by Table 611.6(1), 611.6(2), 611.6(3) or 611.6(4), whichever is applicable.

611.7.2.3 Solid wall segments at corners. At all interior and exterior corners of exterior walls, a solid wall segment shall extend the full height of each wall story. The segment shall have the length required to develop the horizontal reinforcement above and below the adjacent opening in tension in accordance with Section 611.5.4.4. For an exterior corner, the limiting dimension is measured on the outside of the wall, and for an interior corner the limiting dimension is measured on the inside of the wall. See Section 611.8.1. The length of a segment contributing to the required length of solid wall shall comply with Section 611.7.2.1.

The end of a solid wall segment complying with the minimum length requirements of Section 611.7.2.1 shall be located no more than 6 feet (1829 mm) from each corner.

TABLE 611.7(1A)
UNREDUCED LENGTH, *UR*, OF SOLID WALL REQUIRED IN EACH EXTERIOR ENDWALL FOR WIND PERPENDICULAR TO RIDGE ONE STORY OR TOP STORY OF TWO-STORY[a,c,d,e,f,g]

SIDEWALL LENGTH (feet)	ENDWALL LENGTH (feet)	ROOF SLOPE	UNREDUCED LENGTH, *UR*, OF SOLID WALL REQUIRED IN ENDWALLS FOR WIND PERPENDICULAR TO RIDGE (feet)						
			Basic Wind Speed (mph) Exposure						
			85B	90B	100B	110B	120B	130B	Minimum[b]
					85C	90C	100C	110C	
						85D	90D	100D	
15	15	< 1:12	0.90	1.01	1.25	1.51	1.80	2.11	0.98
		5:12	1.25	1.40	1.73	2.09	2.49	2.92	1.43
		7:12	1.75	1.96	2.43	2.93	3.49	4.10	1.64
		12:12	2.80	3.13	3.87	4.68	5.57	6.54	2.21
	30	< 1:12	0.90	1.01	1.25	1.51	1.80	2.11	1.09
		5:12	1.25	1.40	1.73	2.09	2.49	2.92	2.01
		7:12	2.43	2.73	3.37	4.08	4.85	5.69	2.42
		12:12	4.52	5.07	6.27	7.57	9.01	10.58	3.57
	45	< 1:12	0.90	1.01	1.25	1.51	1.80	2.11	1.21
		5:12	1.25	1.40	1.73	2.09	2.49	2.92	2.59

		7:12	3.12	3.49	4.32	5.22	6.21	7.29	3.21
		12:12	6.25	7.00	8.66	10.47	12.45	14.61	4.93
	60	< 1:12	0.90	1.01	1.25	1.51	1.80	2.11	1.33
		5:12	1.25	1.40	1.73	2.09	2.49	2.92	3.16
		7:12	3.80	4.26	5.26	6.36	7.57	8.89	3.99
		12:12	7.97	8.94	11.05	13.36	15.89	18.65	6.29
30	15	< 1:12	1.61	1.80	2.23	2.70	3.21	3.77	1.93
		5:12	2.24	2.51	3.10	3.74	4.45	5.23	2.75
		7:12	3.15	3.53	4.37	5.28	6.28	7.37	3.12
		12:12	4.90	5.49	6.79	8.21	9.77	11.46	4.14
	30	< 1:12	1.61	1.80	2.23	2.70	3.21	3.77	2.14
		5:12	2.24	2.51	3.10	3.74	4.45	5.23	3.78
		7:12	4.30	4.82	5.96	7.20	8.57	10.05	4.52
		12:12	7.79	8.74	10.80	13.06	15.53	18.23	6.57
	45	< 1:12	1.61	1.80	2.23	2.70	3.21	3.77	2.35
		5:12	2.24	2.51	3.10	3.74	4.45	5.23	4.81
		7:12	5.44	6.10	7.54	9.12	10.85	12.73	5.92
		12:12	10.69	11.98	14.81	17.90	21.30	25.00	9.00
	60	< 1:12	1.61	1.80	2.23	2.70	3.21	3.77	2.56
		5:12	2.24	2.51	3.10	3.74	4.45	5.23	5.84
		7:12	6.59	7.39	9.13	11.04	13.14	15.41	7.32
		12:12	13.58	15.22	18.82	22.75	27.07	31.77	11.43
60	15	< 1:12	2.99	3.35	4.14	5.00	5.95	6.98	3.83
		5:12	4.15	4.65	5.75	6.95	8.27	9.70	5.37
		7:12	5.91	6.63	8.19	9.90	11.78	13.83	6.07
		12:12	9.05	10.14	12.54	15.16	18.03	21.16	8.00
	30	< 1:12	2.99	3.35	4.14	5.00	5.95	6.98	4.23
		5:12	4.15	4.65	5.75	6.95	8.27	9.70	7.31
		7:12	7.97	8.94	11.05	13.36	15.89	18.65	8.71
		12:12	14.25	15.97	19.74	23.86	28.40	33.32	12.57
	45	< 1:12	3.11	3.48	4.30	5.20	6.19	7.26	4.63
		5:12	4.31	4.84	5.98	7.23	8.60	10.09	9.25
		7:12	10.24	11.47	14.19	17.15	20.40	23.84	11.35
		12:12	19.84	22.24	27.49	33.23	39.54	46.40	17.14
	60	< 1:12	3.22	3.61	4.46	5.39	6.42	7.53	5.03
		5:12	4.47	5.01	6.19	7.49	8.91	10.46	11.19

		7:12	12.57	14.09	17.42	21.05	25.05	29.39	13.99
		12:12	25.61	28.70	35.49	42.90	51.04	59.90	21.71

For SI: 1 inch = 25.4 mm; 1 foot = 304.8 mm; 1 mile per hour = 0.447 m/s, 1 pound-force per linear foot = 0.146kN/m, 1 pound per square foot = 47.88 Pa.

a. Tabulated lengths were derived by calculating design wind pressures in accordance with Figure 6-10 of ASCE 7 for a building with a mean roof height of 35 feet (10 668 mm). For wind perpendicular to the ridge, the effects of a 2-foot overhang on each endwall are included. The design pressures were used to calculate forces to be resisted by solid wall segments in each endwall [Table 611.7(1A) or 611.7(1B) or sidewall (Table 611.7(1C)], as appropriate. The forces to be resisted by each wall line were then divided by the default design strength of 840 pounds per linear foot (12.26 kN/m) of length to determine the required solid wall length. The actual mean roof height of the building shall not exceed the least horizontal dimension of the building.

b. Tabulated lengths in the "minimum" column are based on the requirement of Section 6.1.4.1 of ASCE 7 that the main wind-force resisting system be designed for a minimum service level force of 10 psf multiplied by the area of the building projected onto a vertical plane normal to the assumed wind direction. Tabulated lengths in shaded cells are less than the "minimum" value. Where the minimum controls, it is permitted to be reduced in accordance with Notes c, d and e. See Section 611.7.1.1.

c. For buildings with a mean roof height of less than 35 feet, tabulated lengths are permitted to be reduced by multiplying by the appropriate factor, R_1, from Table 611.7(2). The reduced length shall not be less than the "minimum" value shown in the table.

d. Tabulated lengths for "one story or top story of two-story" are based on a floor-to-ceiling height of 10 feet. Tabulated lengths for "first story of two-story" are based on floor-to-ceiling heights of 10 feet each for the first and second story. For floor-to-ceiling heights less than assumed, use the lengths in Table 611.7(1A), (1B) or (1C), or multiply the value in the table by the reduction factor, R_2, from Table 611.7(3).

e. Tabulated lengths are based on the default design shear strength of 840 pounds per linear foot of solid wall segment. The tabulated lengths are permitted to be reduced by multiplying by the applicable reduction factor for design strength, R_3, from Table 611.7(4).

f. The reduction factors, R_1, R_2, and R_3, in Tables 611.7(2), 611.7(3), and 611.7(4), respectively, are permitted to be compounded, subject to the limitations of Note b. However, the minimum number and minimum length of solid walls segments in each wall line shall comply with Sections 611.7.1 and 611.7.2.1, respectively.

g. For intermediate values of sidewall length, endwall length, roof slope and basic wind speed, use the next higher value, or determine by interpolation.

TABLE 611.7(1B)
UNREDUCED LENGTH, *UR*, OF SOLID WALL REQUIRED IN EACH EXTERIOR ENDWALL FOR WIND PERPENDICULAR TO RIDGE FIRST STORY OF TWO-STORY[a,c,d,e,f,g]

SIDEWALL LENGTH (feet)	ENDWALL LENGTH (feet)	ROOF SLOPE	UNREDUCED LENGTH, *UR*, OF SOLID WALL REQUIRED IN ENDWALLS FOR WIND PERPENDICULAR TO RIDGE (feet)						
			Basic Wind Speed (mph) Exposure						
			85B	90B	100B	110B	120B	130B	Minimum[b]
					85C	90C	100C	110C	
						85D	90D	100D	
			Velocity pressure (psf)						
			11.51	12.90	15.95	19.28	22.94	26.92	
15	15	< 1:12	2.60	2.92	3.61	4.36	5.19	6.09	2.59
		5:12	3.61	4.05	5.00	6.05	7.20	8.45	3.05
		7:12	3.77	4.23	5.23	6.32	7.52	8.82	3.26
		12:12	4.81	5.40	6.67	8.06	9.60	11.26	3.83
	30	< 1:12	2.60	2.92	3.61	4.36	5.19	6.09	2.71
		5:12	3.61	4.05	5.00	6.05	7.20	8.45	3.63
		7:12	4.45	4.99	6.17	7.46	8.88	10.42	4.04
		12:12	6.54	7.33	9.06	10.96	13.04	15.30	5.19
	45	< 1:12	2.60	2.92	3.61	4.36	5.19	6.09	2.83
		5:12	3.61	4.05	5.00	6.05	7.20	8.45	4.20
		7:12	5.14	5.76	7.12	8.60	10.24	12.01	4.83
		12:12	8.27	9.27	11.46	13.85	16.48	19.34	6.55
	60	< 1:12	2.60	2.92	3.61	4.36	5.19	6.09	2.95
		5:12	3.61	4.05	5.00	6.05	7.20	8.45	4.78
		7:12	5.82	6.52	8.06	9.75	11.60	13.61	5.61
		12:12	9.99	11.20	13.85	16.74	19.92	23.37	7.90
30	15	< 1:12	4.65	5.21	6.45	7.79	9.27	10.88	5.16
		5:12	6.46	7.24	8.95	10.82	12.87	15.10	5.98
		7:12	6.94	7.78	9.62	11.62	13.83	16.23	6.35
		12:12	8.69	9.74	12.04	14.55	17.32	20.32	7.38
	30	< 1:12	4.65	5.21	6.45	7.79	9.27	10.88	5.38
		5:12	6.46	7.24	8.95	10.82	12.87	15.10	7.01
		7:12	8.09	9.06	11.21	13.54	16.12	18.91	7.76
		12:12	11.58	12.98	16.05	19.40	23.08	27.09	9.81
	45	< 1:12	4.65	5.21	6.45	7.79	9.27	10.88	5.59
		5:12	6.46	7.24	8.95	10.82	12.87	15.10	8.04
		7:12	9.23	10.35	12.79	15.46	18.40	21.59	9.16
		12:12	14.48	16.22	20.06	24.25	28.85	33.86	12.24
	60	< 1:12	4.65	5.21	6.45	7.79	9.27	10.88	5.80
		5:12	6.46	7.24	8.95	10.82	12.87	15.10	9.08
		7:12	10.38	11.63	14.38	17.38	20.69	24.27	10.56
		12:12	17.37	19.47	24.07	29.10	34.62	40.63	14.67
60	15	< 1:12	8.62	9.67	11.95	14.45	17.19	20.17	10.30

		5:12	11.98	13.43	16.61	20.07	23.88	28.03	11.85
		7:12	13.18	14.78	18.27	22.08	26.28	30.83	12.54
		12:12	16.32	18.29	22.62	27.34	32.53	38.17	14.48
	30	< 1:12	8.62	9.67	11.95	14.45	17.19	20.17	10.70
		5:12	11.98	13.43	16.61	20.07	23.88	28.03	13.79
		7:12	15.25	17.09	21.13	25.54	30.38	35.66	15.18
		12:12	21.52	24.12	29.82	36.05	42.89	50.33	19.05
	45	< 1:12	8.97	10.06	12.43	15.03	17.88	20.99	11.10
		5:12	12.46	13.97	17.27	20.88	24.84	29.15	15.73
		7:12	17.67	19.80	24.48	29.59	35.21	41.32	17.82
		12:12	27.27	30.56	37.79	45.68	54.35	63.78	23.62
	60	< 1:12	9.30	10.43	12.89	15.58	18.54	21.76	11.50
		5:12	12.91	14.47	17.90	21.63	25.74	30.20	17.67
		7:12	20.14	22.58	27.91	33.74	40.15	47.11	20.46
		12:12	33.19	37.19	45.99	55.59	66.14	77.62	28.19

For SI: 1 inch = 25.4 mm; 1 foot = 304.8 mm; 1 mile per hour = 0.447 m/s, 1 pound force per linear foot = 0.146kN/m, 1 pound per square foot = 47.88 Pa.

a. Tabulated lengths were derived by calculating design wind pressures in accordance with Figure 6-10 of ASCE 7 for a building with a mean roof height of 35 feet (10 668 mm). For wind perpendicular to the ridge, the effects of a 2-foot (610 mm) overhang on each endwall are included. The design pressures were used to calculate forces to be resisted by solid wall segments in each endwall [Table 611.7(1A) or 611.7(1B)] or sidewall [Table 611.7(1C)], as appropriate. The forces to be resisted by each wall line were then divided by the default design strength of 840 pounds per linear foot (12.26 kN/m) of length to determine the required solid wall length. The actual mean roof height of the building shall not exceed the least horizontal dimension of the building.

b. Tabulated lengths in the "minimum" column are based on the requirement of Section 6.1.4.1 of ASCE 7 that the main wind-force resisting system be designed for a minimum service level force of 10 psf multiplied by the area of the building projected onto a vertical plane normal to the assumed wind direction. Tabulated lengths in shaded cells are less than the "minimum" value. Where the minimum controls, it is permitted to be reduced in accordance with Notes c, d and e. See Section 611.7.1.1.

c. For buildings with a mean roof height of less than 35 feet tabulated lengths are permitted to be reduced by multiplying by the appropriate factor, R_1, from Table 611.7(2). The reduced length shall not be less than the "minimum" value shown in the table.

d. Tabulated lengths for "one story or top story of two-story" are based on a floor-to-ceiling height of 10 feet. Tabulated lengths for "first story of two-story" are based on floor-to-ceiling heights of 10 feet each for the first and second story. For floor-to-ceiling heights less than assumed, use the lengths in Table 611.7(1A), (1B) or (1C), or multiply the value in the table by the reduction factor, R_2, from Table 611.7(3).

e. Tabulated lengths are based on the default design shear strength of 840 pounds per linear foot of solid wall segment. The tabulated lengths are permitted to be reduced by multiplying by the applicable reduction factor for design strength, R_3, from Table 611.7(4).

f. The reduction factors, R_1, R_2, and R_3, in Tables 611.7(2), 611.7(3), and 611.7(4), respectively, are permitted to be compounded, subject to the limitations of Note b. However, the minimum number and minimum length of solid walls segments in each wall line shall comply with Sections 611.7.1 and 611.7.2.1, respectively.

g. For intermediate values of sidewall length, endwall length, roof slope and basic wind speed, use the next higher value, or determine by interpolation.

TABLE 611.7(1C)
UNREDUCED LENGTH, *UR*, OF SOLID WALL REQUIRED IN EACH EXTERIOR SIDEWALL FOR WIND PARALLEL TO RIDGE[a,c,d,e,f,g]

SIDEWALL LENGTH (feet)	ENDWALL LENGTH (feet)	ROOF SLOPE	UNREDUCED LENGTH, *UR*, OF SOLID WALL REQUIRED IN ~~ENDWALLS~~ SIDEWALLS FOR WIND ~~PERPENDICULAR~~ PARALLEL TO RIDGE (feet)						
			Basic Wind Speed (mph) Exposure						
			85B	90B	100B	110B	120B	130B	Minimum[b]
					85C	90C	100C	110C	
						85D	90D	100D	
			One story or top story of two-story						
< 30	15	< 1:12	0.95	1.06	1.31	1.59	1.89	2.22	0.90
		5:12	1.13	1.26	1.56	1.88	2.24	2.63	1.08
		7:12	1.21	1.35	1.67	2.02	2.40	2.82	1.17
		12:12	1.43	1.60	1.98	2.39	2.85	3.34	1.39
	30	< 1:12	1.77	1.98	2.45	2.96	3.53	4.14	1.90
		5:12	2.38	2.67	3.30	3.99	4.75	5.57	2.62
		7:12	2.66	2.98	3.69	4.46	5.31	6.23	2.95
		12:12	3.43	3.85	4.76	5.75	6.84	8.03	3.86
	45	< 1:12	2.65	2.97	3.67	4.43	5.27	6.19	2.99
		5:12	3.98	4.46	5.51	6.66	7.93	9.31	4.62
		7:12	4.58	5.14	6.35	7.68	9.14	10.72	5.36
		12:12	6.25	7.01	8.67	10.48	12.47	14.63	7.39
	60	< 1:12	3.59	4.03	4.98	6.02	7.16	8.40	4.18
		5:12	5.93	6.65	8.22	9.93	11.82	13.87	7.07
		7:12	6.99	7.83	9.69	11.71	13.93	16.35	8.38
		12:12	9.92	11.12	13.75	16.62	19.77	23.21	12.00
60	45	< 1:12	2.77	3.11	3.84	4.65	5.53	6.49	2.99
		5:12	4.15	4.66	5.76	6.96	8.28	9.72	4.62
		7:12	4.78	5.36	6.63	8.01	9.53	11.18	5.36
		12:12	6.51	7.30	9.03	10.91	12.98	15.23	7.39
	60	< 1:12	3.86	4.32	5.35	6.46	7.69	9.02	4.18
		5:12	6.31	7.08	8.75	10.57	12.58	14.76	7.07
		7:12	7.43	8.32	10.29	12.44	14.80	17.37	8.38
		12:12	10.51	11.78	14.56	17.60	20.94	24.57	12.00
First story of two-story									
< 30	15	< 1:12	2.65	2.97	3.67	4.44	5.28	6.20	2.52
		5:12	2.83	3.17	3.92	4.74	5.64	6.62	2.70
		7:12	2.91	3.26	4.03	4.87	5.80	6.80	2.79
		12:12	3.13	3.51	4.34	5.25	6.24	7.32	3.01
	30	< 1:12	4.81	5.39	6.67	8.06	9.59	11.25	5.14
		5:12	5.42	6.08	7.52	9.09	10.81	12.69	5.86
		7:12	5.70	6.39	7.90	9.55	11.37	13.34	6.19
		12:12	6.47	7.25	8.97	10.84	12.90	15.14	7.10
	45	< 1:12	6.99	7.83	9.69	11.71	13.93	16.35	7.85

		5:12	8.32	9.33	11.53	13.94	16.59	19.47	9.48
		7:12	8.93	10.01	12.37	14.95	17.79	20.88	10.21
		12:12	10.60	11.88	14.69	17.75	21.13	24.79	12.25
	60	< 1:12	9.23	10.35	12.79	15.46	18.40	21.59	10.65
		5:12	11.57	12.97	16.03	19.38	23.06	27.06	13.54
		7:12	12.63	14.15	17.50	21.15	25.17	29.54	14.85
		12:12	15.56	17.44	21.56	26.06	31.01	36.39	18.48
60	45	< 1:12	7.34	8.22	10.17	12.29	14.62	17.16	7.85
		5:12	8.72	9.77	12.08	14.60	17.37	20.39	9.48
		7:12	9.34	10.47	12.95	15.65	18.62	21.85	10.21
		12:12	11.08	12.41	15.35	18.55	22.07	25.90	12.25
	60	< 1:12	9.94	11.14	13.77	16.65	19.81	23.25	10.65
		5:12	12.40	13.89	17.18	20.76	24.70	28.99	13.54
		7:12	13.51	15.14	18.72	22.63	26.92	31.60	14.85
		12:12	16.59	18.59	22.99	27.79	33.06	38.80	18.48

For SI: 1 inch = 25.4 mm, 1 foot = 304.8 mm, 1 mile per hour = 0.447 m/s, 1 pound force per linear foot = 0.146kN/m, 1 pound per square foot = 47.88 Pa.

a. Tabulated lengths were derived by calculating design wind pressures in accordance with Figure 6-10 of ASCE 7 for a building with a mean roof height of 35 feet (10 668 mm). For wind perpendicular to the ridge, the effects of a 2-foot (610 mm) overhang on each endwall are included. The design pressures were used to calculate forces to be resisted by solid wall segments in each endwall [Table 611.7(1A) or 611.7(1B)] or sidewall [(Table 611.7(1C)], as appropriate. The forces to be resisted by each wall line were then divided by the default design strength of 840 pounds per linear foot (12.26 kN/m) of length to determine the required solid wall length. The actual mean roof height of the building shall not exceed the least horizontal dimension of the building.

b. Tabulated lengths in the "minimum" column are based on the requirement of Section 6.1.4.1 of ASCE 7 that the main wind-force resisting system be designed for a minimum service level force of 10 psf multiplied by the area of the building projected onto a vertical plane normal to the assumed wind direction. Tabulated lengths in shaded cells are less than the "minimum" value. Where the minimum controls, it is permitted to be reduced in accordance with Notes c, d and e. See Section 611.7.1.1.

c. For buildings with a mean roof height of less than 35 feet, tabulated lengths are permitted to be reduced by multiplying by the appropriate factor, R_1, from Table 611.7(2). The reduced length shall not be less than the "minimum" value shown in the table.

d. Tabulated lengths for "one story or top story of two-story" are based on a floor-to-ceiling height of 10 feet. Tabulated lengths for "first story of two-story" are based on floor-to-ceiling heights of 10 feet each for the first and second story. For floor-to-ceiling heights less than assumed, use the lengths in Table 611.7(1A), (1B) or (1C), or multiply the value in the table by the reduction factor, R_2, from Table 611.7(3).

e. Tabulated lengths are based on the default design shear strength of 840 pounds per linear foot of solid wall segment. The tabulated lengths are permitted to be reduced by multiplying by the applicable reduction factor for design strength, $R3$, from Table 611.7(4).

f. The reduction factors, R_1, R_2, and R_3, in Tables 611.7(2), 611.7(3), and 611.7(4), respectively, are permitted to be compounded, subject to the limitations of Note b. However, the minimum number and minimum length of solid walls segments in each wall line shall comply with Sections 611.7.1 and 611.7.2.1, respectively.

g. For intermediate values of sidewall length, endwall length, roof slope and basic wind speed, use the next higher value, or determine by interpolation.

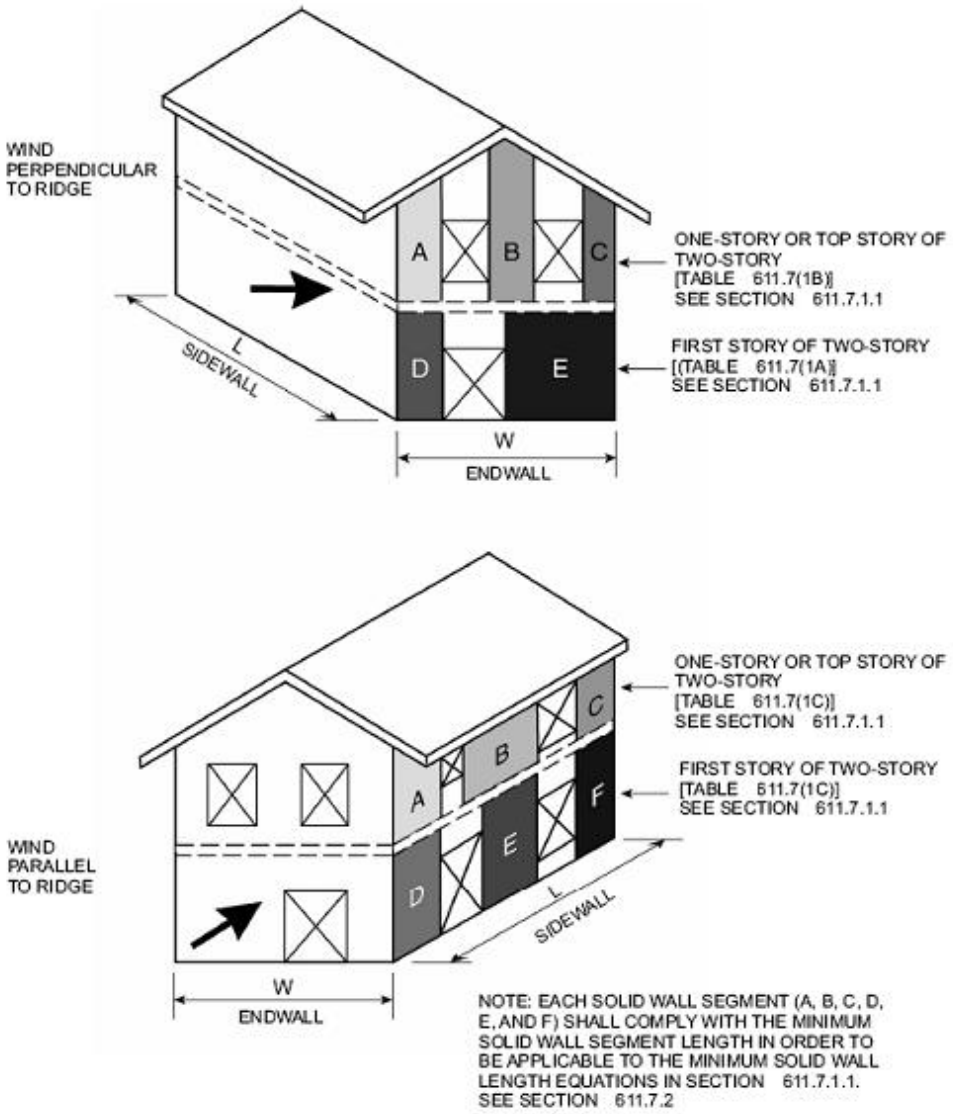

FIGURE 611.7(1)
MINIMUM SOLID WALL LENGTH

DETAIL NO.	NOM. WALL THICKNESS, IN.	REINFORCEMENT LAYOUT AT ENDS OF SOLID WALL SEGMENTS	NOTES
1	4	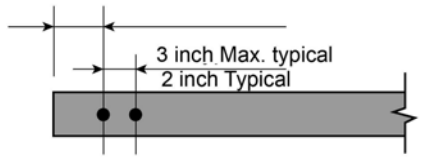	For SI: 1 inch = 25.4 mm. 1. See Table 611.7(4) for use of details. 2. Minimum length of solid wall segment and size and grade of reinforcement in each end of each solid wall segment shall be determined from Table 611.7(4). 3. For minimum cover requirements, see Section 611.5.4.1. 4. For details 3 - 8 where two or more bars are in the same row parallel to the end of the segment, place bars so that corner bars are as close to the sides of the wall segments as minimum cover requirements of Section 611.5.4.1 will permit. 5. For waffle- and screen-grid walls, each end of each solid wall segment shall have rectangular flanges. In the through-the-wall dimension, the flange shall not be less than $5^1/_2$ inches for 6-inch nominal waffle- and screen-grid forms, and not less than $7^1/_2$ inches for 8-inch nominal waffle-grid forms. In the in-plane dimension, flanges shall be long enough to accommodate the vertical reinforcement required by the layout detail selected and provide the cover required by Section 611.5.4.1 If necessary to achieve the required dimensions, form material shall be removed or flat wall forms are permitted. See Table 611.7(4), Note e.
2	4		
3	6 8 10		
4	6		
5	8	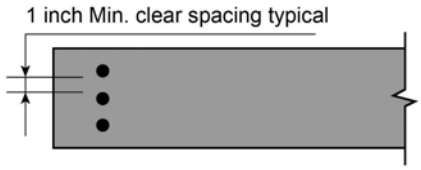	
6	8		
7	10		
8	10	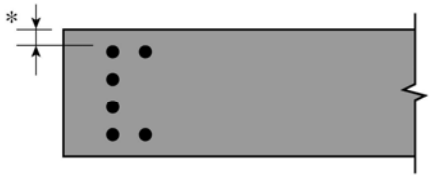 * For minimum cover see Section 611.5.4.1	

FIGURE 611.7(2)
VERTICAL REINFORCEMENT LAYOUT DETAIL

TABLE 611.7(2)
REDUCTION FACTOR, R_1, FOR BUILDINGS WITH MEAN ROOF HEIGHT LESS THAN 35 FEET[a]

MEAN ROOF HEIGHT[b,c] (feet)	REDUCTION FACTOR R_1, FOR MEAN ROOF HEIGHT		
	Exposure category		
	B	C	D
< 15	0.96	0.84	0.87
20	0.96	0.89	0.91
25	0.96	0.93	0.94
30	0.96	0.97	0.98
35	1.00	1.00	1.00

For SI: 1 foot = 304.8 mm.

a. See Section 611.7.1.1 and note c to Table 611.7(1A) for application of reduction factors in this table. This reduction is not permitted for "minimum" values.

b. For intermediate values of mean roof height, use the factor for the next greater height, or determine by interpolation.

c. Mean roof height is the average of the roof eave height and height of the highest point on the roof surface, except that for roof slopes of less than or equal to $2^1/_8$:12 (10 degrees), the mean roof height is permitted to be taken as the roof eave height.

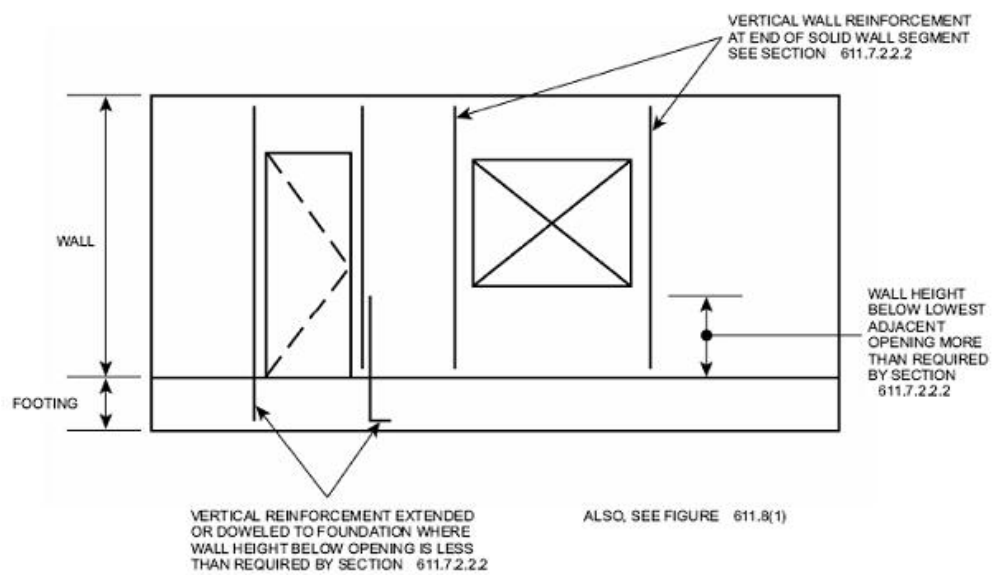

FIGURE 611.7(3)
VERTICAL WALL REINFORCEMENT ADJACENT TO WALL OPENINGS

TABLE 611.7(3)
REDUCTION FACTOR, R_2, FOR FLOOR-TO-CEILING WALL HEIGHTS LESS THAN 10 FEET[a,b]

STORY UNDER CONSIDERATION	FLOOR-TOCEILING HEIGHT[c] (feet)	ENDWALL LENGTH (feet)	ROOF SLOPE	REDUCTION FACTOR, R_2
Endwalls—for wind perpendicular to ridge				
One story or top story of two-story	8	15	< 5:12	0.83
			7:12	0.90
			12:12	0.94
		60	< 5:12	0.83
			7:12	0.95
			12:12	0.98
First story of two-story	16 combined first and second story	15	< 5:12	0.83
			7:12	0.86
			12:12	0.89
		60	< 5:12	0.83
			7:12	0.91
			12:12	0.95
Sidewalls—for wind parallel to ridge				
One story or top story of two-story	8	15	< 1:12	0.84
			5:12	0.87
			7:12	0.88
			12:12	0.89
		60	< 1:12	0.86
			5:12	0.92
			7:12	0.93
			12:12	0.95
First story of two-story	16 combined first and second story	15	< 1:12	0.83
			5:12	0.84
			7:12	0.85
			12:12	0.86
		60	< 1:12	0.84
			5:12	0.87
			7:12	0.88
			12:12	0.90

For SI: 1 foot = 304.8 mm.

a. See Section 611.7.1.1 and Note d to Table 611.7(1A) for application of reduction factors in this table.

b. For intermediate values of endwall length, and/or roof slope, use the next higher value, or determine by interpolation.

c. Tabulated values in Table 611.7(1A) and (1C) for "one story or top story of two-story" are based on a floor-to-ceiling height of 10 feet (3048 mm). Tabulated values in Table 611.7(1B) and (1C) for "first story of two-story" are based on floor-to-ceiling heights of 10 feet each for the first and second story. For floor to ceiling heights between those shown in this table and those assumed in Table 611.7(1A), (1B) or (1C), use the solid wall lengths in Table 611.7(1A), (1B) or (1C), or determine the reduction factor by interpolating between 1.0 and the factor shown in this table.

TABLE 611.7(4)
REDUCTION FACTOR FOR DESIGN STRENGTH, R_3, FOR FLAT, WAFFLE- AND SCREEN-GRID WALLS[a,c]

NOMINAL THICKNESS OF WALL (inches)	VERTICAL BARS AT EACH END OF SOLID WALL SEGMENT		VERTICAL REINFORCEMENT LAYOUT DETAIL [see Figure R611.7(2)]	REDUCTION FACTOR, R_3, FOR LENGTH OF SOLID WALL			
				Horizontal and vertical shear reinforcement provided			
				No		Yes[d]	
	Number of bars	Bar size		40,000[b]	60,000[b]	40,000[b]	60,000[b]
Flat walls							
4	2	4	1	0.74	0.61	0.74	0.50
	3	4	2	0.61	0.61	0.52	0.27
	2	5	1	0.61	0.61	0.48	0.25
	3	5	2	0.61	0.61	0.26	0.18
6	2	4	3	0.70	0.48	0.70	0.48
	3	4	4	0.49	0.38	0.49	0.33
	2	5	3	0.46	0.38	0.46	0.31
	3	5	4	0.38	0.38	0.32	0.16
8	2	4	3	0.70	0.47	0.70	0.47
	3	4	5	0.47	0.32	0.47	0.32
	2	5	3	0.45	0.31	0.45	0.31
	4	4	6	0.36	0.28	0.36	0.25
	3	5	5	0.31	0.28	0.31	0.16
	4	5	6	0.28	0.28	0.24	0.12
10	2	4	3	0.70	0.47	0.70	0.47
	2	5	3	0.45	0.30	0.45	0.30
	4	4	7	0.36	0.25	0.36	0.25
	6	4	8	0.25	0.22	0.25	0.13
	4	5	7	0.24	0.22	0.24	0.12
	6	5	8	0.22	0.22	0.12	0.08
Waffle-grid walls[e]							
6	2	4	3	0.78	0.78	0.70	0.48
	3	4	4	0.78	0.78	0.49	0.25
	2	5	3	0.78	0.78	0.46	0.23
	3	5	4	0.78	0.78	0.24	0.16
8	2	4	3	0.78	0.78	0.70	0.47
	3	4	5	0.78	0.78	0.47	0.24
	2	5	3	0.78	0.78	0.45	0.23
	4	4	6	0.78	0.78	0.36	0.18
	3	5	5	0.78	0.78	0.23	0.16
	4	5	6	0.78	0.78	0.18	0.13
Screen-grid walls[e]							
6	2	4	3	0.93	0.93	0.70	0.48
	3	4	4	0.93	0.93	0.49	0.25
	2	5	3	0.93	0.93	0.46	0.23
	3	5	4	0.93	0.93	0.24	0.16

For SI: 1 inch = 25.4 mm; 1,000 pounds per square inch = 6.895 MPa.

a. See note e to Table 611.7(1A) for application of adjustment factors in this table.

b. Yield strength in pounds per square inch of vertical wall reinforcement at ends of solid wall segments.
c. Values are based on concrete with a specified compressive strength, f_c', of 2,500 psi. Where concrete with f_c' of not less than 3,000 psi is used, values in shaded cells are permitted to be decreased by multiplying by 0.91.
d. Horizontal and vertical shear reinforcement shall be provided in accordance with Section 611.7.2.2.
e. Each end of each solid wall segment shall have rectangular flanges. In the through-the-wall dimension, the flange shall not be less than 5½ inches for 6-inch nominal waffle-and screen-grid walls, and not less than 7½ inches for 8-inch nominal waffle-grid walls. In the in-plane dimension, flanges shall be long enough to accommodate the vertical reinforcement required by the layout detail selected from Figure 611.7(2)and provide the cover required by Section 611.5.4.1. If necessary to achieve the required dimensions, form material shall be removed or use of flat wall forms is permitted.

611.8 Requirements for lintels and reinforcement around openings.

611.8.1 Reinforcement around openings. Reinforcement shall be provided around openings in walls equal to or greater than 2 feet (610mm) in width in accordance with this section and Figure 611.8(1), in addition to the minimum wall reinforcement required by Sections 404.1.2, 611.6 and 611.7. Vertical wall reinforcement required by this section is permitted to be used as reinforcement at the ends of solid wall segments required by Section 611.7.2.2.2 provided it is located in accordance with Section 611.8.1.2. Wall openings shall have a minimum depth of concrete over the width of the opening of 8 inches (203mm) in flat walls and waffle-grid walls, and 12 inches (305mm) in screen-grid walls. Wall openings in waffle-grid and screen-grid walls shall be located such that not less than one-half of a vertical core occurs along each side of the opening.

611.8.1.1 Horizontal reinforcement. Lintels complying with Section 611.8.2 shall be provided above wall openings equal to or greater than 2 feet (610mm) in width.

Exception: Continuous horizontal wall reinforcement placed within 12 inches (305mm) of the top of the wall story as required in Sections 404.1.2.2 and 611.6.2 is permitted in lieu of top or bottom lintel reinforcement required by Section 611.8.2 provided that the continuous horizontal wall reinforcement meets the location requirements specified in Figures 611.8(2), 611.8(3), and 611.8(4) and the size requirements specified in Tables 611.8(2) through 611.8(10).

Openings equal to or greater than 2 feet (610mm) in width shall have a minimum of one No.4 bar placed within 12 inches (305mm) of the bottom of the opening. See Figure 611.8(1).

Horizontal reinforcement placed above and below an opening shall extend beyond the edges of the opening the dimension required to develop the bar in tension in accordance with Section 611.5.4.4.

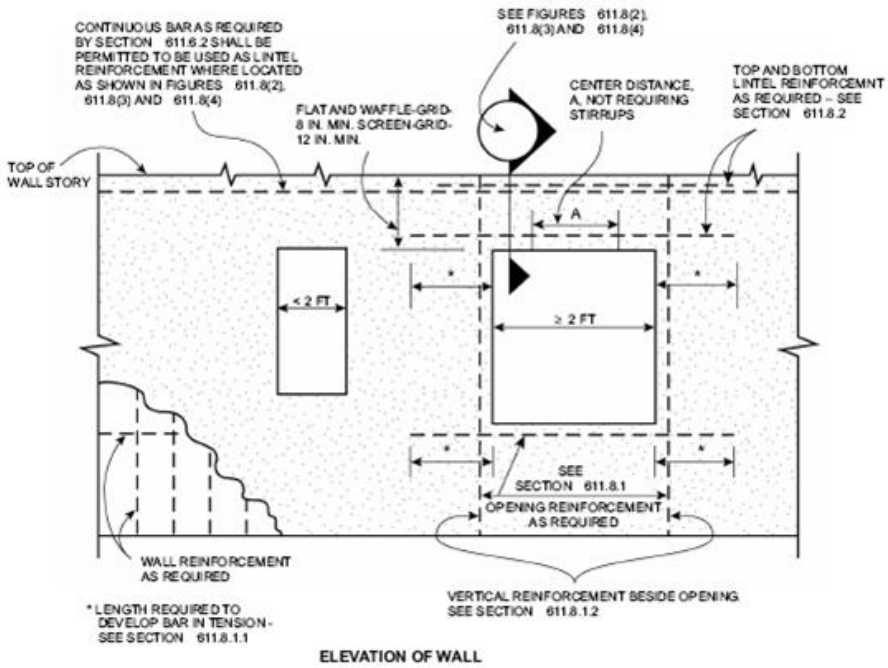

For SI: 1 inch = 25.4 mm, 1 foot = 304.8 mm.

FIGURE 611.8(1)
REINFORCEMENT OF OPENINGS

611.8.1.2 Vertical reinforcement. Not less than one No.4 bar [Grade 40 (280MPa)] shall be provided on each side of openings equal to or greater than 2 feet (610mm) in width. The vertical reinforcement required by this section shall extend the full height of the wall story and shall be located within 12 inches (305mm) of each side of the opening. The vertical reinforcement required on each side of an opening by this section is permitted to serve as reinforcement at the ends of solid wall segments in accordance with Section 611.7.2.2.2, provided it is located as required by the applicable detail in Figure 611.7(2). Where the vertical reinforcement required by this section is used to satisfy the requirements of Section 611.7.2.2.2 in waffle-and screen-grid walls, a concrete flange shall be created at the ends of the solid wall segments in accordance with Table

611.7(4), note e. In the top-most story, the reinforcement shall terminate in accordance with Section 611.6.4.

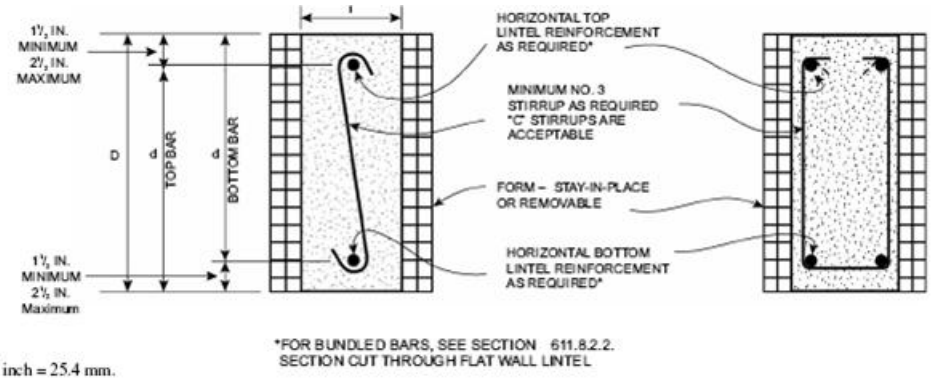

For SI: 1 inch = 25.4 mm.

For SI: 1 inch = 25.4 mm.

FIGURE 611.8(2)
LINTEL FOR FLAT WALLS

611.8.2 Lintels. Lintels shall be provided over all openings equal to or greater than 2 feet (610 mm) in width. Lintels with uniform loading shall conform to Sections 611.8.2.1, and 611.8.2.2, or Section 611.8.2.3. Lintels supporting concentrated loads, such as from roof or floor beams or girders, shall be designed in accordance with ACI 318.

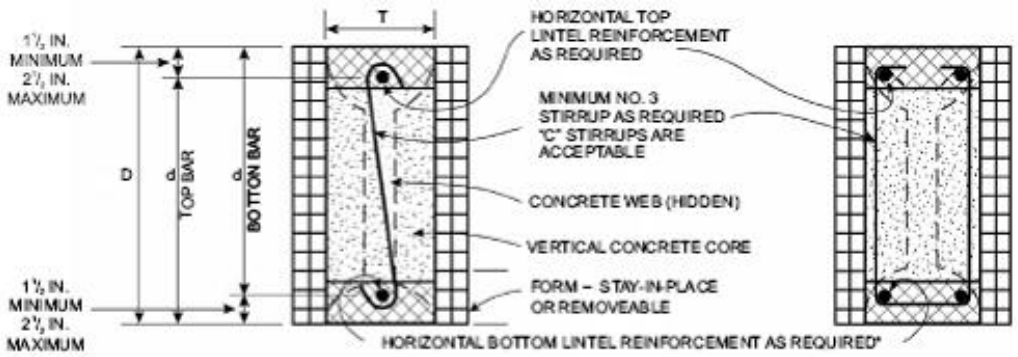

(a) SINGLE FORM HEIGHT SECTION CUT THROUGH VERTICAL CORE OF A WAFFLE-GRID LINTEL

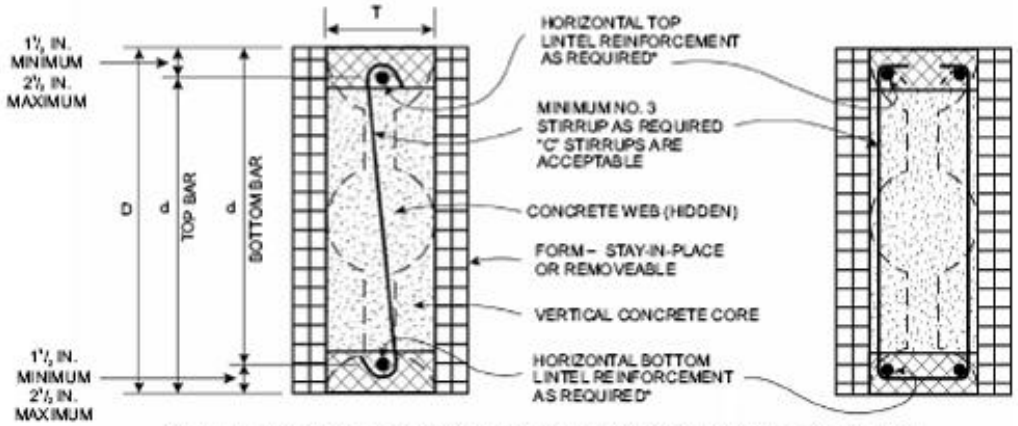

(b) DOUBLE FORM HEIGHT SECTION CUT THROUGH VERTICAL CORE OF A WAFFLE-GRID LINTEL

*FOR BUNDLED BARS, SEE SECTION 611.8.2.2.

NOTE: CROSS-HATCHING REPRESENTS THE AREA IN WHICH FORM MATERIAL SHALL BE REMOVED, IF NECESSARY, TO CREATE FLANGES CONTINUOUS THE LENGTH OF THE LINTEL. FLANGES SHALL HAVE A MINIMUM THICKNESS OF 3 IN., AND A MINIMUM WIDTH OF 5 IN. AND 7 IN. IN 6 IN. NOMINAL AND 8 IN. NOMINAL WAFFLE-GRID WALLS, RESPECTIVELY. SEE NOTE a TO TABLES 611.8(6) AND 611.8(10).

For SI: 1 inch = 25.4 mm.

FIGURE 611.8(3)
LINTELS FOR WAFFLE-GRID WALLS

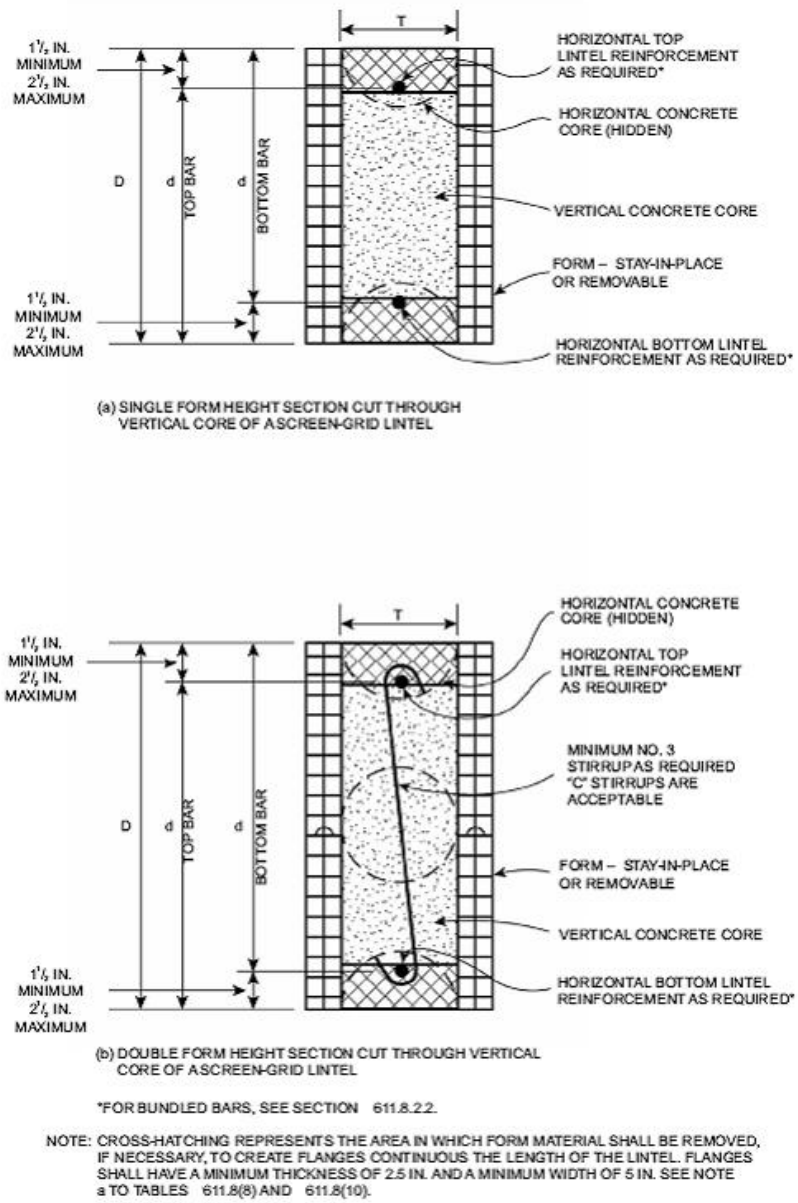

For SI: 1 inch = 25.4 mm.

FIGURE 611.8(4)
LINTELS FOR SCREEN-GRID WALLS

611.8.2.1 Lintels designed for gravity load-bearing conditions. Where a lintel will be subjected to gravity load condition 1 through 5 of Table 611.8(1), the clear span of the lintel shall not exceed that permitted by

Tables 611.8(2) through 611.8(8). The maximum clear span of lintels with and without stirrups in flat walls shall be determined in accordance with Tables 611.8(2) through 611.8(5), and constructed in accordance with Figure 611.8(2). The maximum clear span of lintels with and without stirrups in waffle-grid walls shall be determined in accordance with Tables 611.8(6) and 611.8(7), and constructed in accordance with Figure 611.8(3). The maximum clear span of lintels with and without stirrups in screen-grid walls shall be determined in accordance with Table 611.8(8), and constructed in accordance with Figure 611.8(4).

Where required by the applicable table, No. 3 stirrups shall be installed in lintels at a maximum spacing of $d/2$ where d equals the depth of the lintel, D, less the cover of the concrete as shown in Figures 611.8(2) through 611.8(4). The smaller value of d computed for the top and bottom bar shall be used to determine the maximum stirrup spacing. Where stirrups are required in a lintel with a single bar or two bundled bars in the top and bottom, they shall be fabricated like the letter "c" or "s" with 135-degree (2.36 rad) standard hooks at each end that comply with Section 611.5.4.5 and Figure 611.5.4(3) and installed as shown in Figures 611.8(2) through 611.8(4). Where two bars are required in the top and bottom of the lintel and the bars are not bundled, the bars shall be separated by a minimum of 1 inch (25 mm). The free end of the stirrups shall be fabricated with 90-or 135-degree (1.57 or 2.36 rad) standard hooks that comply with Section 611.5.4.5 and Figure 611.5.4(3) and installed as shown in Figures 611.8(2) and 611.8(3). For flat, waffle-grid and screen-grid lintels, stirrups are not required in the center distance, A, portion of spans in accordance with Figure 611.8(1) and Tables 611.8(2) through 611.8(8). See Section 611.8.2.2, item 5, for requirement for stirrups throughout lintels with bundled bars.

611.8.2.2 Bundled bars in lintels. It is permitted to bundle two bars in contact with each other in lintels if all of the following are observed:

1. Bars no larger than No. 6 are bundled.

2. Where the wall thickness is not sufficient to provide not less than 3 inches (76 mm) of clear space beside bars (total on both sides) oriented horizontally in a bundle, the bundled bars shall be oriented in a vertical plane.

3. Where vertically oriented bundled bars terminate with standard hooks to develop the bars in tension beyond the support (see Section 611.5.4.4), the hook extensions shall be staggered to provide a minimum of one inch (25 mm) clear spacing between the extensions.

4. Bundled bars shall not be lap spliced within the lintel span and the length on each end of the lintel that is required to develop the bars in tension.

5. Bundled bars shall be enclosed within stirrups throughout the length of the lintel. Stirrups and the installation thereof shall comply with Section 611.8.2.1.

611.8.2.3 Lintels without stirrups designed for nonload-bearing conditions. The maximum clear span of lintels without stirrups designed for nonload-bearing conditions of Table 611.8(1).1 shall be determined in accordance with this section. The maximum clear span of lintels without stirrups in flat walls shall be determined in accordance with Table 611.8(9), and the maximum clear span of lintels without stirrups in walls of waffle-grid or screen-grid construction shall be determined in accordance with Table 611.8(10).

TABLE 611.8(1)
LINTEL DESIGN LOADING CONDITIONS[a, b, d]

DESCRIPTION OF LOADS AND OPENINGS ABOVE INFLUENCING DESIGN OF LINTEL			DESIGN LOAD CONDITION[c]
Opening in wall of top story of two-story building, or first story of one-story building			
Wall supporting loads from roof, including attic floor, if applicable, and	Top of lintel equal to or less than W/2 below top of wall		2
	Top of lintel greater than W/2 below top of wall		NLB
Wall not supporting loads from roof or attic floor			NLB
Opening in wall of first story of two-story building where wall immediately above is of concrete construction, or opening in basement wall of one-story building where wall immediately above is of concrete construction			
LB ledger board mounted to side of wall with bottom of ledger less than or equal to W/2 above top of lintel, and	Top of lintel greater than W/2 below bottom of opening in story above		1
	Top of lintel less than or equal to W/2 below bottom of opening in story above, and	Opening is entirely within the footprint of the opening in the story above	1
		Opening is partially within the footprint of the opening in the story above	4
LB ledger board mounted to side of wall with bottom of ledger more than W/2 above top of lintel			NLB
NLB ledger board mounted to side of wall with bottom of ledger less than or equal to W/2 above top of lintel, or no ledger board, and	Top of lintel greater than W/2 below bottom of opening in story above		NLB
	Top of lintel less than or equal to W/2 below bottom of opening in story above, and	Opening is entirely within the footprint of the opening in the story above	NLB
		Opening is partially within the footprint of the opening in the story above	1
Opening in basement wall of two-story building where walls of two stories above are of concrete construction			
LB ledger board mounted to side of wall with bottom of ledger less than or equal to W/2 above top of lintel, and	Top of lintel greater than W/2 below bottom of opening in story above		1
	Top of lintel less than or equal to W/2 below bottom of opening in story above, and	Opening is entirely within the footprint of the opening in the story above	1
		Opening is partially within the footprint of the opening in the story above	5
LB ledger board mounted to side of wall with bottom of ledger more than W/2 above top of lintel			NLB
NLB ledger board mounted to side of wall with bottom of ledger less than or equal to W/2 above top of lintel, or no ledger board, and	Top of lintel greater than W/2 below bottom of opening in story above		NLB
	Top of lintel less than or equal to W/2 below bottom of opening in story above, and	Opening is entirely within the footprint of the opening in the story above	NLB
		Opening is partially within the footprint of the opening in the story above	1
Opening in wall of first story of two-story building where wall immediately above is of light framed construction, or opening in basement wall of one-story building, where wall immediately above is of light framed construction			
Wall supporting loads from roof, second floor and top-story wall of light-framed construction, and	Top of lintel equal to or less than W/2 below top of wall		3
	Top of lintel greater than W/2 below top of wall		NLB
Wall not supporting loads from roof or second floor			NLB

a. LB means load bearing, NLB means nonload-bearing, and W means width of opening.
b. Footprint is the area of the wall below an opening in the story above, bounded by the bottom of the opening and vertical lines extending downward from the edges of the opening.
c. For design loading condition "NLB" see Tables 611.8(9) and 611.8(10). For all other design loading conditions see Tables 611.8(2) through 611.8(8).
d. A NLB ledger board is a ledger attached to a wall that is parallel to the span of the floor, roof or ceiling framing that supports the edge of the floor, ceiling or roof.

TABLE 611.8(2)
MAXIMUM ALLOWABLE CLEAR SPANS FOR 4-INCH NOMINAL THICK FLAT LINTELS IN LOAD-BEARING WALLS[a, b, c, d, e, f, m] ROOF CLEAR SPAN 40 FEET AND FLOOR CLEAR SPAN 32 FEET

LINTEL DEPTH, D[g] (inches)	NUMBER OF BARS AND BAR SIZE IN TOP AND BOTTOM OF LINTEL	STEEL YIELD STRENGTH[h], f_y(psi)	DESIGN LOADING CONDITION DETERMINED FROM TABLE 611.8(1)								
			1	2		3		40		5	
			Maximum ground snow load (psf)								
				30	70	30	70	30	70	30	70
			Maximum clear span of lintel (feet - inches)								
8	Span without stirrups[i, j]		3-2	3-4	2-4	2-6	2-2	2-1	2-0	2-0	2-0
	1-#4	40,000	5-2	5-5	4-1	4-3	3-10	3-7	3-4	2-9	2-9
		60,000	6-2	6-5	4-11	5-1	4-6	4-2	3-8	2-11	2-10
	1-#5	40,000	6-3	6-7	5-0	5-2	4-6	4-2	3-8	2-11	2-10
		60,000	DR	DR	DR	DR	DR	DR	DR	DR	DR
	Center distance A[k, l]		1-1	1-2	0-8	0-9	0-7	0-6	0-5	0-4	0-4
12	Span without stirrups[i, j]		3-4	3-7	2-9	2-11	2-8	2-6	2-5	2-2	2-2
	1-#4	40,000	6-7	7-0	5-4	5-7	5-0	4-9	4-4	3-8	3-7
		60,000	7-11	8-6	6-6	6-9	6-0	5-9	5-3	4-5	4-4
	1-#5	40,000	8-1	8-8	6-7	6-10	6-2	5-10	5-4	4-6	4-5
		60,000	9-8	10-4	7-11	8-2	7-4	6-11	6-2	4-10	4-8
	2-#4 1-#6	40,000	9-1	9-8	7-4	7-8	6-10	6-6	6-0	4-10	4-8
		60,000	DR	DR	DR	DR	DR	DR	DR	DR	DR
	Center distance A[k, l]		1-8	1-11	1-1	1-3	1-0	0-11	0-9	0-6	0-6
16	Span without stirrups[i, j]		4-7	5-0	3-11	4-0	3-8	3-7	3-4	3-1	3-0
	1-#4	40,000	6-8	7-3	5-6	5-9	5-2	4-11	4-6	3-10	3-8
		60,000	9-3	10-1	7-9	8-0	7-2	6-10	6-3	5-4	5-2
	1-#4	40,000	9-6	10-4	7-10	8-2	7-4	6-11	6-5	5-5	5-3
		60,000	11-5	12-5	9-6	9-10	8-10	8-4	7-9	6-6	6-4
	2-#4 1-#6	40,000	10-7	11-7	8-10	9-2	8-3	7-9	7-2	6-1	5-11
		60,000	12-9	13-10	10-7	11-0	9-10	9-4	8-7	6-9	6-6
	2-#5	40,000	13-0	14-1	10-9	11-2	9-11	9-2	8-2	6-6	6-3
		60,000	DR	DR	DR	DR	DR	DR	DR	DR	DR
	Center distance[k, l]		2-3	2-8	1-7	1-8	1-4	1-3	1-0	0-9	0-8
20	Span without stirrups[i, j]		5-9	6-5	5-0	5-2	4-9	4-7	4-4	3-11	3-11
	1-#4	40,000	7-5	8-2	6-3	6-6	5-10	5-7	5-1	4-4	4-2
		60,000	9-0	10-0	7-8	7-11	7-1	6-9	6-3	5-3	5-1
	1-#5	40,000	9-2	10-2	7-9	8-1	7-3	6-11	6-4	5-4	5-2
		60,000	12-9	14-2	10-10	11-3	10-1	9-7	8-10	7-5	7-3
	2-#4	40,000	11-10	13-2	10-1	10-5	9-4	8-11	8-2	6-11	6-9

	1-#6	60,000	14-4	15-10	12-1	12-7	11-3	10-9	9-11	8-4	8-1
	2-#5	40,000	14-7	16-2	12-4	12-9	11-4	10-6	9-5	7-7	7-3
		60,000	17-5	19-2	14-9	15-3	13-5	12-4	11-0	8-8	8-4
	2-#6	40,000	16-4	18-11	12-7	13-3	11-4	10-6	9-5	7-7	7-3
		60,000	DR	DR	DR	DR	DR	DR	DR	DR	DR
	Center distance A[k, l]		2-9	3-5	2-0	2-2	1-9	1-7	1-4	0-11	0-11
24	Span without stirrups[i, j]		6-11	7-9	6-1	6-3	5-9	5-7	5-3	4-9	4-8
	1-#4	40,000	8-0	9-0	6-11	7-2	6-5	6-2	5-8	4-9	4-8
		60,000	9-9	11-0	8-5	8-9	7-10	7-6	6-11	5-10	5-8
	1-#5	40,000	10-0	11-3	8-7	8-11	8-0	7-7	7-0	5-11	5-9
		60,000	13-11	15-8	12-0	12-5	11-2	10-7	9-10	8-3	8-0
	2-#4 1-#6	40,000	12-11	14-6	11-2	11-6	10-5	9-10	9-1	7-8	7-5
		60,000	15-7	17-7	13-6	13-11	12-7	11-11	11-0	9-3	9-0
	2-#5	40,000	15-11	17-11	13-7	14-3	12-8	11-9	10-8	8-7	8-4
		60,000	19-1	21-6	16-5	17-1	15-1	14-0	12-6	9-11	9-7
	2-#6	40,000	17-7	21-1	14-1	14-10	12-8	11-9	10-8	8-7	8-4
		60,000	DR	DR	DR	DR	DR	DR	DR	DR	DR
	Center distance A[k, l]		3-3	4-1	2-5	2-7	2-1	1-11	1-7	1-2	1-1

For SI: 1 inch = 25.4 mm; 1 foot = 304.8 mm; 1 pound per square foot = 0.0479kPa; Grade 40 = 280 MPa; Grade 60 = 420 MPa.

a. See Table 611.3 for tolerances permitted from nominal thickness.

b. Table values are based on concrete with a minimum specified compressive strength of 2,500 psi. See note j.

c. Table values are based on uniform loading. See Section 611.8.2 for lintels supporting concentrated loads.

d. Deflection criterion is *L*/240, where L is the clear span of the lintel in inches, or ½-inch, whichever is less.

e. Linear interpolation is permitted between ground snow loads and between lintel depths.

f. DR indicates design required.

g. Lintel depth, *D*, is permitted to include the available height of wall located directly above the lintel, provided that the increased lintel depth spans the entire length of the lintel.

h. Stirrups shall be fabricated from reinforcing bars with the same yield strength as that used for the main longitudinal reinforcement.

i. Allowable clear span without stirrups applicable to all lintels of the same depth, *D*. Top and bottom reinforcement for lintels without stirrups shall not be less than the least amount of reinforcement required for a lintel of the same depth and loading condition with stirrups. All other spans require stirrups spaced at not more than d/2.

j. Where concrete with a minimum specified compressive strength of 3,000 psi (20.7 MPa) is used, clear spans for lintels without stirrups shall be permitted to be multiplied by 1.05. If the increased span exceeds the allowable clear span for a lintel of the same depth and loading condition with stirrups, the top and bottom reinforcement shall be equal to or greater than that required for a lintel of the same depth and loading condition that has an allowable clear span that is equal to or greater than that of the lintel without stirrups that has been increased.

k. Center distance, *A*, is the center portion of the clear span where stirrups are not required. This is applicable to all longitudinal bar sizes and steel yield strengths.

l. Where concrete with a minimum specified compressive strength of 3,000 psi is used, center distance, *A*, shall be permitted to be multiplied by 1.10.

m. The maximum clear opening width between two solid wall segments shall be 18 feet (5486 mm). See Section 611.7.2.1. Lintel clear spans in the table greater than 18 feet are shown for interpolation and information only.

TABLE 611.8(3)
MAXIMUM ALLOWABLE CLEAR SPANS FOR 6-INCH NOMINAL THICK FLAT LINTELS IN LOAD-BEARING WALLS[a, b, c, d, e, f, m]
ROOF CLEAR SPAN 40 FEET AND FLOOR CLEAR SPAN 32 FEET

LINTEL DEPTH, D[g] (inches)	NUMBER OF BARS AND BAR SIZE IN TOP AND BOTTOM OF LINTEL	STEEL YIELD STRENGTH[h], f_y(psi)	DESIGN LOADING CONDITION DETERMINED FROM TABLE 611.8(1)								
			1	2		3		4		5	
			Maximum ground snow load (psf)								
				30	70	30	70	30	70	30	70
			Maximum clear span of lintel (feet - inches)								
8	Span without stirrups[i, j]		4-2	4-8	3-1	3-3	2-10	2-6	2-3	2-0	2-0
	1-#4	40,000	5-1	5-5	4-2	4-3	3-10	3-6	3-3	2-8	2-7
		60,000	6-2	6-7	5-0	5-2	4-8	4-2	3-11	3-3	3-2
	1-#5	40,000	6-3	6-8	5-1	5-3	4-9	4-3	4-0	3-3	3-2
		60,000	7-6	8-0	6-1	6-4	5-8	5-1	4-9	3-8	3-6
	2-#4 1-#6	40,000	7-0	7-6	5-8	5-11	5-3	4-9	4-5	3-8	3-6
		60,000	DR	DR	DR	DR	DR	DR	DR	DR	DR
	Center distance A[k, l]		1-7	1-10	1-1	1-2	0-11	0-9	0-8	0-5	0-5
12	Span without stirrups[i, j]		4-2	4-8	3-5	3-6	3-2	2-11	2-9	2-5	2-4
	1-#4	40,000	5-7	6-1	4-8	4-10	4-4	3-11	3-8	3-0	2-11
		60,000	7-9	8-6	6-6	6-9	6-1	5-6	5-1	4-3	4-1
	1-#5	40,000	7-11	8-8	6-8	6-11	6-2	5-7	5-2	4-4	4-2
		60,000	9-7	10-6	8-0	8-4	7-6	6-9	6-3	5-2	5-1
	2-#4 1-#6	40,000	8-11	9-9	7-6	7-9	6-11	6-3	5-10	4-10	4-8
		60,000	10-8	11-9	8-12	9-4	8-4	7-6	7-0	5-10	5-8
	2-#5	40,000	10-11	12-0	9-2	9-6	8-6	7-8	7-2	5-6	5-3
		60,000	12-11	14-3	10-10	11-3	10-1	9-0	8-1	6-1	5-10
	2-#6	40,000	12-9	14-0	10-8	11-1	9-7	8-1	7-3	5-6	5-3
		60,000	DR	DR	DR	DR	DR	DR	DR	DR	DR
	Center distance A[k, l]		2-6	3-0	1-9	1-10	1-6	1-3	1-1	0-9	0-8
16	Span without stirrups[i, j]		5-7	6-5	4-9	4-11	4-5	4-0	3-10	3-4	3-4
	1-#4	40,000	6-5	7-2	5-6	5-9	5-2	4-8	4-4	3-7	3-6
		60,000	7-10	8-9	6-9	7-0	6-3	5-8	5-3	4-4	4-3
	1-#5	40,000	7-11	8-11	6-10	7-1	6-5	5-9	5-4	4-5	4-4
		60,000	11-1	12-6	9-7	9-11	8-11	8-0	7-6	6-2	6-0
	2-#4 1-#6	40,000	10-3	11-7	8-10	9-2	8-3	7-6	6-11	5-9	5-7
		60,000	12-5	14-0	10-9	11-1	10-0	9-0	8-5	7-0	6-9
	2-#5	40,000	12-8	14-3	10-11	11-4	10-2	9-2	8-7	6-9	6-6
		60,000	15-2	17-1	13-1	13-7	12-3	11-0	10-3	7-11	7-7
	2-#6	40,000	14-11	16-9	12-8	13-4	11-4	9-8	8-8	6-9	6-6

		60,000	DR	DR	DR	DR	DR	DR	DR	DR	DR
	Center distance A[k, l]		3-3	4-1	2-5	2-7	2-1	1-9	1-6	1-0	1-0
20	Span without stirrups[i, j]		6-11	8-2	6-1	6-3	5-8	5-2	4-11	4-4	4-3
	1-#5	40,000	8-9	10-1	7-9	8-0	7-3	6-6	6-1	5-1	4-11
		60,000	10-8	12-3	9-5	9-9	8-10	8-0	7-5	6-2	6-0
	2-#4 1-#6	40,000	9-11	11-4	8-9	9-1	8-2	7-4	6-10	5-8	5-7
		60,000	13-9	15-10	12-2	12-8	11-5	10-3	9-7	7-11	7-9
	2-#5	40,000	14-0	16-2	12-5	12-11	11-7	10-6	9-9	7-11	7-8
		60,000	16-11	19-6	15-0	15-6	14-0	12-7	11-9	9-1	8-9
	2-#6	40,000	16-7	19-1	14-7	15-3	13-1	11-3	10-2	7-11	7-8
		60,000	19-11	22-10	17-4	18-3	15-6	13-2	11-10	9-1	8-9
	Center distance A[k, l]		3-11	5-2	3-1	3-3	2-8	2-2	1-11	1-4	1-3
24	Span without stirrups[i, j]		8-2	9-10	7-4	7-8	6-11	6-4	5-11	5-3	5-2
	1-#5	40,000	9-5	11-1	8-7	8-10	8-0	7-3	6-9	5-7	5-5
		60,000	11-6	13-6	10-5	10-9	9-9	8-9	8-2	6-10	6-8
	2-#4 1-#6	40,000	10-8	12-6	9-8	10-0	9-0	8-2	7-7	6-4	6-2
		60,000	12-11	15-2	11-9	12-2	11-0	9-11	9-3	7-8	7-6
	2-#5	40,000	15-2	17-9	13-9	14-3	12-10	11-7	10-10	9-0	8-9
		60,000	18-4	21-6	16-7	17-3	15-6	14-0	13-1	10-4	10-0
	2-#6	40,000	18-0	21-1	16-4	16-11	14-10	12-9	11-8	9-2	8-11
		60,000	21-7	25-4	19-2	20-4	17-2	14-9	13-4	10-4	10-0
	Center distance A[k, l]		4-6	6-2	3-8	4-0	3-3	2-8	2-3	1-7	1-6

For SI: 1 inch = 25.4 mm; 1 foot = 304.8 mm; 1 psf = 0.0479 kPa; Grade 40 = 280 MPa; Grade 60 = 420 MPa.

a. See Table 611.3 for tolerances permitted from nominal thickness.

b. Table values are based on concrete with a minimum specified compressive strength of 2,500 psi. See Note j.

c. Table values are based on uniform loading. See Section 611.8.2 for lintels supporting concentrated loads.

d. Deflection criterion is *L*/240, where L is the clear span of the lintel in inches, or ½-inch, whichever is less.

e. Linear interpolation is permitted between ground snow loads and between lintel depths.

f. DR indicates design required.

g. Lintel depth, *D*, is permitted to include the available height of wall located directly above the lintel, provided that the increased lintel depth spans the entire length of the lintel.

h. Stirrups shall be fabricated from reinforcing bars with the same yield strength as that used for the main longitudinal reinforcement.

i. Allowable clear span without stirrups applicable to all lintels of the same depth, *D*. Top and bottom reinforcement for lintels without stirrups shall not be less than the least amount of reinforcement required for a lintel of the same depth and loading condition with stirrups. All other spans require stirrups spaced at not more than d/2.

j. Where concrete with a minimum specified compressive strength of 3,000 psi is used, clear spans for lintels without stirrups shall be permitted to be multiplied by 1.05. If the increased span exceeds the allowable clear span for a lintel of the same depth and loading condition with stirrups, the top and bottom reinforcement shall be equal to or greater than that required for a lintel of the same depth and loading condition that has an allowable clear span that is equal to or greater than that of the lintel without stirrups that has been increased.

k. Center distance, *A*, is the center portion of the clear span where stirrups are not required. This is applicable to all longitudinal bar sizes and steel yield strengths.
l. Where concrete with a minimum specified compressive strength of 3,000 psi is used, center distance, A, shall be permitted to be multiplied by 1.10.
m. The maximum clear opening width between two solid wall segments shall be 18 feet (5486 mm). See Section 611.7.2.1. Lintel clear spans in the table greater than 18 feet are shown for interpolation and information only.

TABLE 611.8(4)
MAXIMUM ALLOWABLE CLEAR SPANS FOR 8-INCH NOMINAL THICK FLAT LINTELS IN LOAD-BEARING WALLS[a, b, c, d, e, f, m]
ROOF CLEAR SPAN 40 FEET AND FLOOR CLEAR SPAN 32 FEET

LINTEL DEPTH, D[g] (inches)	NUMBER OF BARS AND BAR SIZE IN TOP AND BOTTOM OF LINTEL	STEEL YIELD STRENGTH[h], f_y(psi)	DESIGN LOADING CONDITION DETERMINED FROM TABLE 611.8(1)								
			1	2		3		4		5	
			Maximum ground snow load (psf)								
				30	70	30	70	30	70	30	70
			Maximum clear span of lintel (feet - inches)								
8	Span without stirrups[i, j]		4-4	4-9	3-7	3-9	3-4	2-10	2-7	2-1	2-0
	1-#4	40,000	4-4	4-9	3-7	3-9	3-4	2-11	2-9	2-3	2-2
		60,000	6-1	6-7	5-0	5-3	4-8	4-0	3-9	3-1	3-0
	1-#5	40,000	6-2	6-9	5-2	5-4	4-9	4-1	3-10	3-2	3-1
		60,000	7-5	8-1	6-2	6-5	5-9	4-11	4-7	3-9	3-8
	2-#4 1-#6	40,000	6-11	7-6	5-9	6-0	5-4	4-7	4-4	3-6	3-5
		60,000	8-3	9-0	6-11	7-2	6-5	5-6	5-2	4-2	4-1
	2-#5	40,000	8-5	9-2	7-0	7-3	6-6	5-7	5-3	4-2	4-0
		60,000	DR	DR	DR	DR	DR	DR	DR	DR	DR
	Center distance A[k, l]		2-1	2-6	1-5	1-6	1-3	0-11	0-10	0-6	0-6
12	Span without stirrups[i, j]		4-10	5-8	4-0	4-2	3-9	3-2	3-0	2-7	2-6
	1-#4	40,000	5-5	6-1	4-8	4-10	4-4	3-9	3-6	2-10	2-10
		60,000	6-7	7-5	5-8	5-11	5-4	4-7	4-3	3-6	3-5
	1-#5	40,000	6-9	7-7	5-9	6-0	5-5	4-8	4-4	3-7	3-6
		60,000	9-4	10-6	8-1	8-4	7-6	6-6	6-1	5-0	4-10
	2-#4 1-#6	40,000	8-8	9-9	7-6	7-9	7-0	6-0	5-8	4-7	4-6
		60,000	10-6	11-9	9-1	9-5	8-5	7-3	6-10	5-7	5-5
	2-#5	40,000	10-8	12-0	9-3	9-7	8-7	7-5	6-11	5-6	5-4
		60,000	12-10	14-5	11-1	11-6	10-4	8-11	8-4	6-7	6-4
	2-#6	40,000	12-7	14-2	10-10	11-3	10-2	8-3	7-6	5-6	5-4
		60,000	DR	DR	DR	DR	DR	DR	DR	DR	DR
	Center distance A[k, l]		3-2	4-0	2-4	2-6	2-0	1-6	1-4	0-11	0-10
16	Span without stirrups[i, j]		6-5	7-9	5-7	5-10	5-2	4-5	4-2	3-7	3-6
	1-#4	40,000	6-2	7-1	5-6	5-8	5-1	4-5	4-2	3-5	3-4

		60,000	7-6	8-8	6-8	6-11	6-3	5-5	5-1	4-2	4-0
	1-#5	40,000	7-8	8-10	6-10	7-1	6-4	5-6	5-2	4-3	4-1
		60,000	9-4	10-9	8-4	8-7	7-9	6-8	6-3	5-2	5-0
	2-#4 1-#6	40,000	8-8	10-0	7-8	8-0	7-2	6-2	5-10	4-9	4-8
		60,000	12-0	13-11	10-9	11-2	10-0	8-8	8-1	6-8	6-6
	2-#5	40,000	12-3	14-2	11-0	11-4	10-3	8-10	8-3	6-9	6-7
		60,000	14-10	17-2	13-3	13-8	12-4	10-8	10-0	7-11	7-8
	2-#6	40,000	14-6	16-10	13-0	13-5	12-1	10-1	9-2	6-11	6-8
		60,000	17-5	20-2	15-7	16-1	14-6	11-10	10-8	7-11	7-8
	Center distance[k, l]		4-1	5-5	3-3	3-6	2-10	2-1	1-10	1-3	1-2
20	Span without stirrups[i, j]		7-10	9-10	7-1	7-5	6-7	5-8	5-4	4-7	4-6
	1-#5	40,000	8-4	9-11	7-8	8-0	7-2	6-3	5-10	4-9	4-8
		60,000	10-2	12-1	9-5	9-9	8-9	7-7	7-1	5-10	5-8
	2-#4 1-#6	40,000	9-5	11-3	8-8	9-0	8-1	7-0	6-7	5-5	5-3
		60,000	11-6	13-8	10-7	11-0	9-11	8-7	8-0	6-7	6-5
	2-#5	40,000	11-9	13-11	10-10	11-2	10-1	8-9	8-2	6-8	6-7
		60,000	16-4	19-5	15-0	15-7	14-0	12-2	11-4	9-3	9-0
	2-#6	40,000	16-0	19-0	14-9	15-3	13-9	11-10	10-10	8-3	8-0
		60,000	19-3	22-11	17-9	18-5	16-7	13-7	12-4	9-3	9-0
	Center distance A[k, l]		4-10	6-10	4-1	4-5	3-7	2-8	2-4	1-7	1-6
24	Span without stirrups[i, j]		9-2	11-9	8-7	8-11	8-0	6-11	6-6	5-7	5-6
	1-#5	40,000	8-11	10-10	8-6	8-9	7-11	6-10	6-5	5-3	5-2
		60,000	10-11	13-3	10-4	10-8	9-8	8-4	7-10	6-5	6-3
	2-#4 1-#6	40,000	10-1	12-3	9-7	9-11	8-11	7-9	7-3	6-0	5-10
		60,000	12-3	15-0	11-8	12-1	10-11	9-5	8-10	7-3	7-1
	2-#5	40,000	12-6	15-3	11-11	12-4	11-1	9-7	9-0	7-5	7-3
		60,000	17-6	21-3	16-7	17-2	15-6	13-5	12-7	10-4	10-1
	2-#6	40,000	17-2	20-11	16-3	16-10	15-3	13-2	12-4	9-7	9-4
		60,000	20-9	25-3	19-8	20-4	18-5	15-4	14-0	10-7	10-3
	Center distance A[k, l]		5-6	8-1	4-11	5-3	4-4	3-3	2-10	1-11	1-10

For SI: 1 inch = 25.4 mm; 1 foot = 304.8 mm; 1 psf = 0.0479kPa; Grade 40 = 280 MPa; Grade 60 = 420 MPa.

Note: Top and bottom reinforcement for lintels without stirrups shown in shaded cells shall be equal to or greater than that required for lintel of the same depth and loading condition that has an allowable clear span that is equal to or greater than that of the lintel without stirrups.

a. See Table 611.3 for tolerances permitted from nominal thickness.

b. Table values are based on concrete with a minimum specified compressive strength of 2,500 psi. See Note j.

c. Table values are based on uniform loading. See Section 611.8.2 for lintels supporting concentrated loads.

d. Deflection criterion is *L*/240, where L is the clear span of the lintel in inches, or ½-inch, whichever is less.

e. Linear interpolation is permitted between ground snow loads and between lintel depths.

f. DR indicates design required.

g. Lintel depth, *D*, is permitted to include the available height of wall located directly above the lintel, provided that the increased lintel depth spans the entire length of the lintel.
h. Stirrups shall be fabricated from reinforcing bars with the same yield strength as that used for the main longitudinal reinforcement.
i. Allowable clear span without stirrups applicable to all lintels of the same depth, *D*. Top and bottom reinforcement for lintels without stirrups shall not be less than the least amount of reinforcement required for a lintel of the same depth and loading condition with stirrups. All other spans require stirrups spaced at not more than d/2.
j. Where concrete with a minimum specified compressive strength of 3,000 psi is used, clear spans for lintels without stirrups shall be permitted to be multiplied by 1.05. If the increased span exceeds the allowable clear span for a lintel of the same depth and loading condition with stirrups, the top and bottom reinforcement shall be equal to or greater than that required for a lintel of the same depth and loading condition that has an allowable clear span that is equal to or greater than that of the lintel without stirrups that has been increased.
k. Center distance, *A*, is the center portion of the clear span where stirrups are not required. This is applicable to all longitudinal bar sizes and steel yield strengths.
l. Where concrete with a minimum specified compressive strength of 3,000 psi is used, center distance, *A*, shall be permitted to be multiplied by 1.10.
m. The maximum clear opening width between two solid wall segments shall be 18 feet. See Section 611.7.2.1. Lintel clear spans in the table greater than 18 feet are shown for interpolation and information only.

TABLE 611.8(5)
MAXIMUM ALLOWABLE CLEAR SPANS FOR 10-INCH NOMINAL THICK FLAT LINTELS IN LOAD-BEARING WALLS[a, b, c, d, e, f, m]
ROOF CLEAR SPAN 40 FEET AND FLOOR CLEAR SPAN 32 FEET

LINTEL DEPTH, D[g] (inches)	NUMBER OF BARS AND BAR SIZE IN TOP AND BOTTOM OF LINTEL	STEEL YIELD STRENGTH[h], f_y(psi)	DESIGN LOADING CONDITION DETERMINED FROM TABLE 611.8(1)								
			1	2		3		4		5	
			Maximum ground snow load (psf)								
				30	70	30	70	30	70	30	70
			Maximum clear span of lintel (feet - inches)								
8	Span without stirrups[i, j]		6-0	7-2	4-7	4-10	4-1	3-1	2-11	2-3	2-2
	1-#4	40,000	4-3	4-9	3-7	3-9	3-4	2-9	2-7	2-1	2-1
		60,000	5-11	6-7	5-0	5-3	4-8	3-10	3-8	2-11	2-11
	1-#5	40,000	6-1	6-9	5-2	5-4	4-9	3-11	3-9	3-0	2-11
		60,000	7-4	8-1	6-3	6-5	5-9	4-9	4-6	3-7	3-7
	2-#4 1-#6	40,000	6-10	7-6	5-9	6-0	5-5	4-5	4-2	3-4	3-4
		60,000	8-2	9-1	6-11	7-2	6-6	5-4	5-0	4-1	4-0
	2-#5	40,000	8-4	9-3	7-1	7-4	6-7	5-5	5-1	4-1	4-0
		60,000	9-11	11-0	8-5	8-9	7-10	6-6	6-1	4-8	4-6
	2-#6	40,000	9-9	10-10	8-3	8-7	7-9	6-4	5-10	4-1	4-0
		60,000	DR	DR	DR	DR	DR	DR	DR	DR	DR
	Center distance A[k, l]		2-6	3-1	1-10	1-11	1-7	1-1	0-11	0-7	0-7
12	Span without stirrups[i, j]		5-5	6-7	4-7	4-10	4-3	3-5	3-3	2-8	2-8
	1-#4	40,000	5-3	6-0	4-8	4-10	4-4	3-7	3-4	2-9	2-8
		60,000	6-5	7-4	5-8	5-10	5-3	4-4	4-1	3-4	3-3

	1-#5	40,000	6-6	7-6	5-9	6-0	5-5	4-5	4-2	3-5	3-4
		60,000	7-11	9-1	7-0	7-3	6-7	5-5	5-1	4-2	4-0
	2-#4 1-#6	40,000	7-4	8-5	6-6	6-9	6-1	5-0	4-9	3-10	3-9
		60,000	10-3	11-9	9-1	9-5	8-6	7-0	6-7	5-4	5-3
	2-#5	40,000	10-5	12-0	9-3	9-7	8-8	7-2	6-9	5-5	5-4
		60,000	12-7	14-5	11-2	11-6	10-5	8-7	8-1	6-6	6-4
	2-#6	40,000	12-4	14-2	10-11	11-4	10-2	8-5	7-8	5-7	5-5
		60,000	14-9	17-0	13-1	13-6	12-2	10-0	9-1	6-6	6-4
	Center distance A[k, l]		3-9	4-11	2-11	3-2	2-7	1-9	1-7	1-0	1-0
16	Span without stirrups[i, j]		7-1	9-0	6-4	6-8	5-10	4-9	4-6	3-9	3-8
	1-#4	40,000	5-11	7-0	5-5	5-8	5-1	4-3	4-0	3-3	3-2
		60,000	7-3	8-7	6-8	6-11	6-3	5-2	4-10	3-11	3-10
	1-#5	40,000	7-4	8-9	6-9	7-0	6-4	5-3	4-11	4-0	3-11
		60,000	9-0	10-8	8-3	8-7	7-9	6-5	6-0	4-11	4-9
	2-#4 1-#6	40,000	8-4	9-11	7-8	7-11	7-2	5-11	5-7	4-6	4-5
		60,000	10-2	12-0	9-4	9-8	8-9	7-3	6-10	5-6	5-5
	2-#5	40,000	10-4	12-3	9-6	9-10	8-11	7-4	6-11	5-8	5-6
		60,000	14-4	17-1	13-3	13-8	12-4	10-3	9-8	7-10	7-8
	2-#6	40,000	14-1	16-9	13-0	13-5	12-2	10-1	9-6	7-0	6-10
		60,000	17-0	20-2	15-8	16-2	14-7	12-0	10-11	8-0	7-9
	Center distance[k, l]		4-9	6-8	4-0	4-4	3-6	2-5	2-2	1-5	1-4
20	Span without stirrups[i, j]		8-7	11-4	8-1	8-5	7-5	6-1	5-9	4-10	4-9
	1-#4	40,000	6-5	7-10	6-2	6-4	5-9	4-9	4-6	3-8	3-7
		60,000	7-10	9-7	7-6	7-9	7-0	5-10	5-6	4-5	4-4
	1-#5	40,000	8-0	9-9	7-8	7-11	7-2	5-11	5-7	4-6	4-5
		60,000	9-9	11-11	9-4	9-8	8-9	7-3	6-10	5-6	5-5
	2-#4 1-#6	40,000	9-0	11-1	8-8	8-11	8-1	6-9	6-4	5-2	5-0
		60,000	11-0	13-6	10-6	10-11	9-10	8-2	7-9	6-3	6-2
	2-#5	40,000	11-3	13-9	10-9	11-1	10-0	8-4	7-10	6-5	6-3
		60,000	15-8	19-2	15-0	15-6	14-0	11-8	11-0	8-11	8-9
	2-#6	40,000	15-5	18-10	14-8	15-2	13-9	11-5	10-9	8-6	8-3
		60,000	18-7	22-9	17-9	18-5	16-7	13-10	12-9	9-5	9-2
	Center distance A[k, l]		5-7	8-4	5-1	5-5	4-5	3-1	2-9	1-10	1-9
24	Span without stirrups[i, j]		9-11	13-7	9-9	10-2	9-0	7-5	7-0	5-10	5-9
	1-#5	40,000	8-6	10-8	8-5	8-8	7-10	6-6	6-2	5-0	4-11
		60,000	10-5	13-0	10-3	10-7	9-7	8-0	7-6	6-1	6-0
	2-#4	40,000	9-7	12-1	9-6	9-9	8-10	7-5	7-0	5-8	5-6

	1-#6	60,000	11-9	14-9	11-7	11-11	10-10	9-0	8-6	6-11	6-9
	2-#5	40,000	12-0	15-0	11-9	12-2	11-0	9-2	8-8	7-1	6-11
		60,000	14-7	18-3	14-4	14-10	13-5	11-2	10-7	8-7	8-5
	2-#6	40,000	14-3	17-11	14-1	14-7	13-2	11-0	10-4	8-5	8-3
		60,000	19-11	25-0	19-7	20-3	18-4	15-3	14-5	10-10	10-7
	Center distance A[k, l]		6-3	9-11	6-1	6-6	5-4	3-9	3-4	2-2	2-1

For SI: 1 inch = 25.4 mm; 1 foot = 304.8 mm; 1 pound per square foot = 0.0479kPa; Grade 40 = 280 MPa; Grade 60 = 420 MPa.

Note: Top and bottom reinforcement for lintels without stirrups shown in shaded cells shall be equal to or greater than that required for lintel of the same depth and loading condition that has an allowable clear span that is equal to or greater than that of the lintel without stirrups.

a. See Table 611.3 for tolerances permitted from nominal thickness.

b. Table values are based on concrete with a minimum specified compressive strength of 2,500 psi. See Note j.

c. Table values are based on uniform loading. See Section 611.8.2 for lintels supporting concentrated loads.

d. Deflection criterion is *L*/240, where L is the clear span of the lintel in inches, or ½-inch, whichever is less.

e. Linear interpolation is permitted between ground snow loads and between lintel depths.

f. DR indicates design required.

g. Lintel depth, *D*, is permitted to include the available height of wall located directly above the lintel, provided that the increased lintel depth spans the entire length of the lintel.

h. Stirrups shall be fabricated from reinforcing bars with the same yield strength as that used for the main longitudinal reinforcement.

i. Allowable clear span without stirrups applicable to all lintels of the same depth, *D*. Top and bottom reinforcement for lintels without stirrups shall not be less than the least amount of reinforcement required for a lintel of the same depth and loading condition with stirrups. All other spans require stirrups spaced at not more than d/2.

j. Where concrete with a minimum specified compressive strength of 3,000 psi is used, clear spans for lintels without stirrups shall be permitted to be multiplied by 1.05. If the increased span exceeds the allowable clear span for a lintel of the same depth and loading condition with stirrups, the top and bottom reinforcement shall be equal to or greater than that required for a lintel of the same depth and loading condition that has an allowable clear span that is equal to or greater than that of the lintel without stirrups that has been increased.

k. Center distance, *A*, is the center portion of the clear span where stirrups are not required. This is applicable to all longitudinal bar sizes and steel yield strengths.

l. Where concrete with a minimum specified compressive strength of 3,000 psi is used, center distance, A, shall be permitted to be multiplied by 1.10.

m. The maximum clear opening width between two solid wall segments shall be 18 feet (5486 mm). See Section 611.7.2.1. Lintel clear spans in the table greater than 18 feet are shown for interpolation and information only.

TABLE 611.8(6)
MAXIMUM ALLOWABLE CLEAR SPANS FOR 6-INCH THICK WAFFLE-GRID LINTELS IN LOAD-BEARING WALLS[a, b, c, d, e, f, o]
MAXIMUM ROOF CLEAR SPAN 40 FEET AND MAXIMUM FLOOR SPAN 32 FEET

LINTEL DEPTH, D[g] (inches)	NUMBER OF BARS AND BAR SIZE IN TOP AND BOTTOM OF LINTEL	STEEL YIELD STRENGTH[h], f_y(psi)	DESIGN LOADING CONDITION DETERMINED FROM TABLE 611.8(1)								
			1	2		3		4		5	
			Maximum ground snow load (psf)								
				30	70	30	70	30	70	30	70
			Maximum clear span of lintel (feet - inches)								
8[i]	Span without stirrups[k, l]		2-7	2-9	2-0	2-1	2-0	2-0	2-0	2-0	2-0
	1-#4	40,000	5-2	5-5	4-0	4-3	3-7	3-3	2-11	2-4	2-3
		60,000	5-9	6-3	4-0	4-3	3-7	3-3	2-11	2-4	2-3
	1-#5	40,000	5-9	6-3	4-0	4-3	3-7	3-3	2-11	2-4	2-3
		60,000	5-9	6-3	4-0	4-3	3-7	3-3	2-11	2-4	2-3
	2-#4 1-#6	40,000	5-9	6-3	4-0	4-3	3-7	3-3	2-11	2-4	2-3
		60,000	DR	DR	DR	DR	DR	DR	DR	DR	DR
	Center distance A[m, n]		0-9	0-10	0-6	0-6	0-5	0-5	0-4	STL	STL
12[i]	Span without stirrups[k, l]		2-11	3-1	2-6	2-7	2-5	2-4	2-3	2-1	2-0
	1-#4	40,000	5-9	6-2	4-8	4-10	4-4	4-1	3-9	3-2	3-1
		60,000	8-0	8-7	6-6	6-9	6-0	5-5	4-11	3-11	3-10
	1-#5	40,000	8-1	8-9	6-8	6-11	6-0	5-5	4-11	3-11	3-10
		60,000	9-1	10-3	6-8	7-0	6-0	5-5	4-11	3-11	3-10
	2-#4 1-#6	40,000	9-1	9-9	6-8	7-0	6-0	5-5	4-11	3-11	3-10
	Center distance A[m, n]		1-3	1-5	0-10	0-11	0-9	0-8	0-6	STL	STL
16[i]	Span without stirrups[k, l]		4-0	4-4	3-6	3-7	3-4	3-3	3-1	2-10	2-10
	1-#4	40,000	6-7	7-3	5-6	5-9	5-2	4-10	4-6	3-9	3-8
		60,000	8-0	8-10	6-9	7-0	6-3	5-11	5-5	4-7	4-5
	1-#5	40,000	8-2	9-0	6-11	7-2	6-5	6-0	5-7	4-8	4-6
		60,000	11-5	12-6	9-3	9-9	8-4	7-7	6-10	5-6	5-4
	2-#4 1-#6	40,000	10-7	11-7	8-11	9-3	8-3	7-7	6-10	5-6	5-4
		60,000	12-2	14-0	9-3	9-9	8-4	7-7	6-10	5-6	5-4
	2-#5	40,000	12-2	14-2	9-3	9-9	8-4	7-7	6-10	5-6	5-4
		60,000	DR	DR	DR	DR	DR	DR	DR	DR	DR
	Center distance A[m, n]		1-8	2-0	1-2	1-3	1-0	0-11	0-9	STL	STL
20[i]	Span without stirrups[k, l]		5-0	5-6	4-6	4-7	4-3	4-1	4-0	3-8	3-8
	1-#4	40,000	7-2	8-2	6-3	6-6	5-10	5-6	5-1	4-3	4-2
		60,000	8-11	9-11	7-8	7-11	7-1	6-8	6-2	5-2	5-0

	1-#5	40,000	9-1	10-2	7-9	8-1	7-3	6-10	6-4	5-4	5-2
		60,000	12-8	14-2	10-11	11-3	10-2	9-6	8-9	7-1	6-10
	2-#4 1-#6	40,000	10-3	11-5	8-9	9-1	8-2	7-8	7-1	6-0	5-10
		60,000	14-3	15-11	11-9	12-5	10-8	9-9	8-9	7-1	6-10
	2-#5	40,000	14-6	16-3	11-6	12-1	10-4	9-6	8-6	6-11	6-8
		60,000	DR	DR	DR	DR	DR	DR	DR	DR	DR
	Center distance A[m, n]		2-0	2-6	1-6	1-7	1-3	1-1	1-0	STL	STL
24w[j]	Span without stirrups[k, l]		6-0	6-8	5-5	5-7	5-3	5-0	4-10	4-6	4-5
	1-#4	40,000	7-11	9-0	6-11	7-2	6-5	6-0	5-7	4-8	4-7
		60,000	9-8	10-11	8-5	8-9	7-10	7-4	6-10	5-9	5-7
	1-#5	40,000	9-10	11-2	8-7	8-11	8-0	7-6	7-0	5-10	5-8
		60,000	12-0	13-7	10-6	10-10	9-9	9-2	8-6	7-2	6-11
	2-#4 1-#6	40,000	11-1	12-7	9-8	10-1	9-1	8-6	7-10	6-7	6-5
		60,000	15-6	17-7	13-6	14-0	12-8	11-10	10-8	8-7	8-4
	2-#5	40,000	15-6	17-11	12-8	13-4	11-6	10-7	9-7	7-10	7-7
		60,000	DR	DR	DR	DR	DR	DR	DR	DR	DR
	Center distance A[m, n]		2-4	3-0	1-9	1-11	1-6	1-4	1-2	STL	STL

For SI: 1 inch = 25.4 mm; 1 pound per square foot = 0.0479 kPa; 1 foot = 304.8 mm; Grade 40 = 280 MPa; Grade 60 = 420 MPa.

a. Where lintels are formed with waffle-grid forms, form material shall be removed, if necessary, to create top and bottom flanges of the lintel that are not less than 3 inches in depth (in the vertical direction), are not less than 5 inches (127 mm) in width for 6-inch nominal waffle-grid forms and not less than 7 inches in width for 8-inch nominal waffle-grid forms. See Figure 611.8(3). Flat form lintels shall be permitted in place of waffle-grid lintels. See Tables 611.8(2) through 611.8(5).

b. See Table 611.3 for tolerances permitted from nominal thicknesses and minimum dimensions and spacing of cores.

c. Table values are based on concrete with a minimum specified compressive strength of 2,500 psi (17.2 MPa). See Notes l and n. Table values are based on uniform loading. See Section 611.8.2 for lintels supporting concentrated loads.

d. Deflection criterion is *L*/240, where L is the clear span of the lintel in inches, or ½-inch, whichever is less.

e. Linear interpolation is permitted between ground snow loads.

f. DR indicates design required. STL – stirrups required throughout lintel.

g. Lintel depth, *D*, is permitted to include the available height of wall located directly above the lintel, provided that the increased lintel depth spans the entire length of the lintel.

h. Stirrups shall be fabricated from reinforcing bars with the same yield strength as that used for the main longitudinal reinforcement.

i. Lintels less than 24 inches in depth with stirrups shall be formed from flat-walls forms [see Tables 611.8(2) through 611.8(5)], or, if necessary, form material shall be removed from waffle-grid forms so as to provide the required cover for stirrups. Allowable spans for lintels formed with flat-wall forms shall be determined from Tables 611.8(2) through 611.8(5).

j. Where stirrups are required for 24-inch (610 mm) deep lintels, the spacing shall not exceed 12 inches (305 mm) on center.

k. Allowable clear span without stirrups applicable to all lintels of the same depth, *D*. Top and bottom reinforcement for lintels without stirrups shall not be less than the least amount of reinforcement required for a lintel of the same depth and loading condition with stirrups. All other spans require stirrups spaced at not more than *d*/2.

l. Where concrete with a minimum specified compressive strength of 3,000 psi is used, clear spans for lintels without stirrups shall be permitted to be multiplied by 1.05. If the increased span exceeds the allowable clear span for a lintel of the same depth and loading condition with stirrups, the top and bottom reinforcement shall be equal to or greater than that required for a lintel of the same depth and loading condition that has an allowable clear span that is equal to or greater than that of the lintel without stirrups that has been increased.

m. Center distance, *A*, is the center portion of the span where stirrups are not required. This is applicable to all longitudinal bar sizes and steel yield strengths.

n. Where concrete with a minimum specified compressive strength of 3,000 psi is used, center distance, *A*, shall be permitted to be multiplied by 1.10.

o. The maximum clear opening width between two solid wall segments shall be 18 feet. See Section 611.7.2.1. Lintel spans in the table greater than 18 feet are shown for interpolation and information only.

TABLE 611.8(7)
MAXIMUM ALLOWABLE CLEAR SPANS FOR 8-INCH THICK WAFFLE-GRID LINTELS IN LOAD-BEARING WALLS[a, b, c, d, e, f, o]
MAXIMUM ROOF CLEAR SPAN 40 FEET AND MAXIMUM FLOOR CLEAR SPAN 32 FEET

LINTEL DEPTH, D[g] (inches)	NUMBER OF BARS AND BAR SIZE IN TOP AND BOTTOM OF LINTEL	STEEL YIELD STRENGTH[h], f_y(psi)	DESIGN LOADING CONDITION DETERMINED FROM TABLE 611.8(1)								
			1	2		3		4		5	
				Maximum ground snow load (psf)							
				30	70	30	70	30	70	30	70
			Maximum clear span of lintel (feet - inches)								
8[i]	Span with stirrups[k, l]		2-6	2-9	2-0	2-1	2-0	2-0	2-0	2-0	2-0
	1-#4	40,000	4-5	4-9	3-7	3-9	3-4	3-0	2-10	2-3	2-2
		60,000	5-6	6-2	4-0	4-3	3-7	3-1	2-10	2-3	2-2
	1-#5	40,000	5-6	6-2	4-0	4-3	3-7	3-1	2-10	2-3	2-2
	Center distance A[m, n]		0-9	0-10	0-6	0-6	0-5	0-4	0-4	STL	STL
12i	Span without stirrups[k, l]		2-10	3-1	2-6	2-7	2-5	2-3	2-2	2-0	2-0
	1-#4	40,000	5-7	6-1	4-8	4-10	4-4	3-11	3-8	3-0	2-11
		60,000	6-9	7-5	5-8	5-11	5-4	4-9	4-5	3-8	3-7
	1-#5	40,000	6-11	7-7	5-10	6-0	5-5	4-10	4-6	3-9	3-7
		60,000	8-8	10-1	6-7	7-0	5-11	5-2	4-8	3-9	3-7
	2-#4 1-#6	40,000	8-8	9-10	6-7	7-0	5-11	5-2	4-8	3-9	3-7
		60,000	8-8	10-1	6-7	7-0	5-11	5-2	4-8	3-9	3-7
	Center distance A[m, n]		1-2	1-5	0-10	0-11	0-9	0-7	0-6	STL	STL
16[i]	Span without stirrups[k, l]		3-10	4-3	3-6	3-7	3-4	3-2	3-0	2-10	2-9
	1-#4	40,000	6-5	7-2	5-6	5-9	5-2	4-8	4-4	3-7	3-6
		60,000	7-9	8-9	6-9	7-0	6-3	5-8	5-3	4-4	4-3
	1-#5	40,000	7-11	8-11	6-10	7-1	6-5	5-9	5-4	4-5	4-4
		60,000	9-8	10-11	8-4	8-8	7-10	7-0	6-6	5-2	5-1
	2-#4 1-#6	40,000	9-0	10-1	7-9	8-0	7-3	6-6	6-1	5-0	4-11
		60,000	11-5	13-10	9-2	9-8	8-3	7-2	6-6	5-2	5-1
	Center distance A[m, n]		1-6	1-11	1-2	1-3	1-0	0-10	0-8	STL	STL
20[i]	Span without stirrups[k, l]		4-10	5-5	4-5	4-7	4-3	4-0	3-11	3-7	3-7
	1-#4	40,000	7-0	8-1	6-3	6-5	5-10	5-3	4-11	4-1	3-11

		60,000	8-7	9-10	7-7	7-10	7-1	6-5	6-0	4-11	4-10
	1-#5	40,000	8-9	10-1	7-9	8-0	7-3	6-6	6-1	5-1	4-11
		60,000	10-8	12-3	9-6	9-10	8-10	8-0	7-5	6-2	6-0
	2-#4 1-#6	40,000	9-10	11-4	8-9	9-1	8-2	7-4	6-10	5-8	5-7
		60,000	12-0	13-10	10-8	11-0	9-11	9-0	8-4	6-8	6-6
	2-#5	40,000	12-3	14-1	10-10	11-3	10-2	8-11	8-1	6-6	6-4
		60,000	14-0	17-6	11-8	12-3	10-6	9-1	8-4	6-8	6-6
	Center distance A[m, n]		1-10	2-5	1-5	1-7	1-3	1-0	0-11	STL	STL
24[j]	Span without stirrups[k, l]		5-9	6-7	5-5	5-6	5-2	4-11	4-9	4-5	4-4
	1-#4	40,000	7-6	8-10	6-10	7-1	6-5	5-9	5-5	4-6	4-4
		60,000	9-2	10-9	8-4	8-8	7-10	7-1	6-7	5-6	5-4
	1-#5	40,000	9-5	11-0	8-6	8-10	8-0	7-2	6-8	5-7	5-5
		60,000	11-5	13-5	10-5	10-9	9-9	8-9	8-2	6-10	6-8
	2-#4 1-#6	40,000	10-7	12-5	9-8	10-0	9-0	8-1	7-7	6-3	6-2
		60,000	12-11	15-2	11-9	12-2	11-0	9-11	9-3	7-8	7-6
	2-#5	40,000	13-2	15-6	12-0	12-5	11-2	9-11	9-2	7-5	7-3
		60,000	16-3	21-0	14-1	14-10	12-9	11-1	10-1	8-1	7-11
	2-#6	40,000	14-4	18-5	12-6	13-2	11-5	9-11	9-2	7-5	7-3
	Center distance A[m, n]		2-1	2-11	1-9	1-10	1-6	1-3	1-1	STL	STL

For SI: 1 inch = 25.4 mm; 1 pound per square foot = 0.0479 kPa; 1 foot = 304.8 mm; Grade 40 = 280 MPa; Grade 60 = 420 MPa.

a. Where lintels are formed with waffle-grid forms, form material shall be removed, if necessary, to create top and bottom flanges of the lintel that are not less than 3 inches in depth (in the vertical direction), are not less than 5 inches in width for 6-inch nominal waffle-grid forms and not less than 7 inches in width for 8-inch nominal waffle-grid forms. See Figure 611.8(3). Flat form lintels shall be permitted in lieu of waffle-grid lintels. See Tables 611.8(2) through 611.8(5).

b. See Table 611.3 for tolerances permitted from nominal thicknesses and minimum dimensions and spacing of cores.

c. Table values are based on concrete with a minimum specified compressive strength of 2,500 psi (17.2 MPa). See Notes l and n. Table values are based on uniform loading. See Section 611.8.2 for lintels supporting concentrated loads.

d. Deflection criterion is *L*/240, where L is the clear span of the lintel in inches, or ½-inch, whichever is less.

e. Linear interpolation is permitted between ground snow loads.

f. DR indicates design required. STL – stirrups required throughout lintel.

g. Lintel depth, *D*, is permitted to include the available height of wall located directly above the lintel, provided that the increased lintel depth spans the entire length of the lintel.

h. Stirrups shall be fabricated from reinforcing bars with the same yield strength as that used for the main longitudinal reinforcement.

i. Lintels less than 24 inches in depth with stirrups shall be formed from flat-walls forms [see Tables 611.8(2) through 611.8(5)], or, if necessary, form material shall be removed from waffle-grid forms so as to provide the required cover for stirrups. Allowable spans for lintels formed with flat-wall forms shall be determined from Tables 611.8(2) through 611.8(5).

j. Where stirrups are required for 24-inch (610 mm) deep lintels, the spacing shall not exceed 12 inches on center.

k. Allowable clear span without stirrups applicable to all lintels of the same depth, *D*. Top and bottom reinforcement for lintels without stirrups shall not be less than the least amount of reinforcement required for a lintel of the same depth and loading condition with stirrups. All other spans require stirrups spaced at not more than *d*/2.

l. Where concrete with a minimum specified compressive strength of 3,000 psi is used, clear spans for lintels without stirrups shall be permitted to be multiplied by 1.05. If the increased span exceeds the allowable clear span for a lintel of the same depth and loading condition with stirrups, the top and bottom reinforcement shall be equal to or greater than that required for

a lintel of the same depth and loading condition that has an allowable clear span that is equal to or greater than that of the lintel without stirrups that has been increased.

m. Center distance, *A*, is the center portion of the span where stirrups are not required. This is applicable to all longitudinal bar sizes and steel yield strengths.

n. Where concrete with a minimum specified compressive strength of 3,000 psi is used, center distance, A, shall be permitted to be multiplied by 1.10.

o. The maximum clear opening width between two solid wall segments shall be 18 feet. See Section 611.7.2.1. Lintel spans in the table greater than 18 feet are shown for interpolation and information only.

TABLE 611.8(8)
MAXIMUM ALLOWABLE CLEAR SPANS FOR 6-INCH THICK SCREEN-GRID LINTELS IN LOAD-BEARING WALLS[a, b, c, d, e, f, p]
ROOF CLEAR SPAN 40 FEET AND FLOOR CLEAR SPAN 32 FEET

LINTEL DEPTH, D[g] (inches)	NUMBER OF BARS AND BAR SIZE IN TOP AND BOTTOM OF LINTEL	STEEL YIELD STRENGTH[h], f_y(psi)	DESIGN LOADING CONDITION DETERMINED FROM TABLE 611.8(1)								
			1	2		3		4		5	
				Maximum ground snow load (psf)							
				30	70	30	70	30	70	30	70
			Maximum clear span of lintel (feet - inches)								
12[i, j]	Span without stirrups		2-9	2-11	2-4	2-5	2-3	2-3	2-2	2-0	2-0
16[i, j]	Span without stirrups		3-9	4-0	3-4	3-5	3-2	3-1	3-0	2-9	2-9
20[i, j]	Span without stirrups		4-9	5-1	4-3	4-4	4-1	4-0	3-10	3-7	3-7
24[k]	Span without stirrups[l, m]		5-8	6-3	5-2	5-3	5-0	4-10	4-8	4-4	4-4
	1-#4	40,000	7-11	9-0	6-11	7-2	6-5	6-1	5-8	4-9	4-7
		60,000	9-9	11-0	8-5	8-9	7-10	7-5	6-10	5-9	5-7
	1-#5	40,000	9-11	11-2	8-7	8-11	8-0	7-7	7-0	5-11	5-9
		60,000	12-1	13-8	10-6	10-10	9-9	9-3	8-6	7-2	7-0
	2-#4 1-#6	40,000	11-2	12-8	9-9	10-1	9-1	8-7	7-11	6-8	6-6
		60,000	15-7	17-7	12-8	13-4	11-6	10-8	9-8	7-11	7-8
	2-#5	40,000	14-11	18-0	12-2	12-10	11-1	10-3	9-4	7-8	7-5
		60,000	DR	DR	DR	DR	DR	DR	DR	DR	DR
	Center distance A[n, o]		2-0	2-6	1-6	1-7	1-4	1-2	1-0	STL	STL

For SI: 1 inch = 25.4 mm; 1 pound per square foot = 0.0479kPa; 1 foot = 304.8 mm; Grade 40 = 280MPa; Grade 60 = 420MPa.

a. Where lintels are formed with screen-grid forms, form material shall be removed if necessary to create top and bottom flanges of the lintel that are not less than 5 inches in width and not less than 2.5 inches in depth (in the vertical direction). See Figure 611.8(4). Flat form lintels shall be permitted in lieu of screen-grid lintels. See Tables 611.8(2) through 611.8(5).

b. See Table 611.3 for tolerances permitted from nominal thickness and minimum dimensions and spacings of cores.

c. Table values are based on concrete with a minimum specified compressive strength of 2,500 psi. See Notes m and o. Table values are based on uniform loading. See Section 611.7.2.1 for lintels supporting concentrated loads.

d. Deflection criterion is *L*/240, where L is the clear span of the lintel in inches, or ½-inch, whichever is less.

e. Linear interpolation is permitted between ground snow loads.

f. DR indicates design required. STL indicates stirrups required throughout lintel.

g. Lintel depth, *D*, is permitted to include the available height of wall located directly above the lintel, provided that the increased lintel depth spans the entire length of the lintel.

h. Stirrups shall be fabricated from reinforcing bars with the same yield strength as that used for the main longitudinal reinforcement.
i. Stirrups are not required for lintels less than 24 inches in depth fabricated from screen-grid forms. Top and bottom reinforcement shall consist of a No. 4 bar having a yield strength of 40,000 psi or 60,000 psi.
j. Lintels between 12 and 24 inches in depth with stirrups shall be formed from flat-wall forms [see Tables 611.8(2) through 611.8(5)], or form material shall be removed from screen-grid forms to provide a concrete section comparable to that required for a flat wall. Allowable spans for flat lintels with stirrups shall be determined from Tables 611.8(2) through 611.8(5).
k. Where stirrups are required for 24-inch deep lintels, the spacing shall not exceed 12 inches on center.
l. Allowable clear span without stirrups applicable to all lintels of the same depth, *D*. Top and bottom reinforcement for lintels without stirrups shall not be less than the least amount of reinforcement required for a lintel of the same depth and loading condition with stirrups. All other spans require stirrups spaced at not more than 12 inches.
m. Where concrete with a minimum specified compressive strength of 3,000 psi is used, clear spans for lintels without stirrups shall be permitted to be multiplied by 1.05. If the increased span exceeds the allowable clear span for a lintel of the same depth and loading condition with stirrups, the top and bottom reinforcement shall be equal to or greater than that required for a lintel of the same depth and loading condition that has an allowable clear span that is equal to or greater than that of the lintel without stirrups that has been increased.
n. Center distance, *A*, is the center portion of the span where stirrups are not required. This is applicable to all longitudinal bar sizes and steel yield strengths.
o. Where concrete with a minimum specified compressive strength of 3,000 psi is used, center distance, *A*, shall be permitted to be multiplied by 1.10.
p. The maximum clear opening width between two solid wall segments shall be 18 feet (5486 mm). See Section 611.7.2.1. Lintel spans in the table greater than 18 feet are shown for interpolation and information only.

TABLE 611.8(9)
MAXIMUM ALLOWABLE CLEAR SPANS FOR FLAT LINTELS WITHOUT STIRRUPS IN NONLOAD-BEARING WALLS[a, b, c, d, e, g, h]

LINTEL DEPTH, D[f] (inches)	NUMBER OF BARS AND BAR SIZE	STEEL YIELD STRENGTH, f_y(psi)	NOMINAL WALL THICKNESS (inches)							
			4		6		8		10	
			Lintel Supporting							
			Concrete Wall	Light-framed Gable	Concrete Wall	Light-framed Gable	Concrete Wall	Light-framed Gable	Concrete Wall	Light-framed Gable
			Maximum Clear Span of Lintel (feet - inches)							
8	1-#4	40,000	10-11	11-5	9-7	11-2	7-10	9-5	7-3	9-2
		60,000	12-5	11-7	10-11	13-5	9-11	13-2	9-3	12-10
	1-#5	40,000	12-7	11-7	11-1	13-8	10-1	13-5	9-4	13-1
		60,000	DR	DR	12-7	16-4	11-6	14-7	10-9	14-6
	2-#4 1-#6	40,000	DR	DR	12-0	15-3	10-11	15-0	10-2	14-8
		60,000	DR	DR	DR	DR	12-2	15-3	11-7	15-3
	2-#5	40,000	DR	DR	DR	DR	12-7	16-7	11-9	16-7
		60,000	DR	DR	DR	DR	DR	DR	13-3	16-7
	2-#6	40,000	DR	DR	DR	DR	DR	DR	13-2	17-8
		60,000	DR	DR	DR	DR	DR	DR	DR	DR
12	1-#4	40,000	11-5	9-10	10-6	12-0	9-6	11-6	8-9	11-1
		60,000	11-5	9-10	11-8	13-3	10-11	14-0	10-1	13-6
	1-#5	40,000	11-5	9-10	11-8	13-3	11-1	14-4	10-3	13-9
		60,000	11-5	9-10	11-8	13-3	11-10	16-0	11-9	16-9

	2-#4 1-#6	40,000	DR	DR	11-8	13-3	11-10	16-0	11-2	15-6
		60,000	DR	DR	11-8	13-3	11-10	16-0	11-11	18-4
	2-#5	40,000	DR	DR	11-8	13-3	11-10	16-0	11-11	18-4
		60,000	DR	DR	11-8	13-3	11-10	16-0	11-11	18-4
16	1-#4	40,000	13-6	13-0	11-10	13-8	10-7	12-11	9-11	12-4
		60,000	13-6	13-0	13-8	16-7	12-4	15-9	11-5	15-0
	1-#5	40,000	13-6	13-0	13-10	17-0	12-6	16-1	11-7	15-4
		60,000	13-6	13-0	13-10	17-1	14-0	19-7	13-4	18-8
	2-#4 1-#6	40,000	13-6	13-0	13-10	17-1	13-8	18-2	12-8	17-4
		60,000	13-6	13-0	13-10	17-1	14-0	20-3	14-1	—
	2-#5	40,000	13-6	13-0	13-10	17-1	14-0	20-3	14-1	—
		60,000	DR	DR	13-10	17-1	14-0	20-3	14-1	—
20	1-#4	40,000	14-11	15-10	13-0	14-10	11-9	13-11	10-10	13-2
		60,000	15-3	15-10	14-11	18-1	13-6	17-0	12-6	16-2
	1-#5	40,000	15-3	15-10	15-2	18-6	13-9	17-5	12-8	16-6
		60,000	15-3	15-10	15-8	20-5	15-9	—	14-7	20-1
	2-#4 1-#6	40,000	15-3	15-10	15-8	20-5	14-11	—	13-10	—
		60,000	15-3	15-10	15-8	20-5	15-10	—	15-11	—
	2-#5	40,000	15-3	15-10	15-8	20-5	15-10	—	15-11	—
		60,000	15-3	15-10	15-8	20-5	15-10	—	15-11	—
24	1-#4	40,000	16-1	17-1	13-11	15-10	12-7	14-9	11-8	13-10
		60,000	16-11	18-5	16-1	19-3	14-6	18-0	13-5	17-0
	1-#5	40,000	16-11	18-5	16-3	19-8	14-9	18-5	13-8	17-4
		60,000	16-11	18-5	17-4	—	17-0	—	15-8	—
	2-#4 1-#6	40,000	16-11	18-5	17-4	—	16-1	—	14-10	—
		60,000	16-11	18-5	17-4	—	17-6	—	17-1	—
	2-#5	40,000	16-11	18-5	17-4	—	17-6	—	17-4	—
		60,000	16-11	18-5	17-4	—	17-6	—	17-8	—

For SI: 1 inch = 25.4 mm; 1 foot = 304.8 mm; Grade 40 = 280 MPa; Grade 60 = 420 MPa.

a. See Table 611.3 for tolerances permitted from nominal thickness.

b. Table values are based on concrete with a minimum specified compressive strength of 2,500 psi. See Note e.

c. Deflection criterion is $L/240$, where L is the clear span of the lintel in inches, or ½-inch, whichever is less.

d. Linear interpolation between lintels depths, *D*, is permitted provided the two cells being used to interpolate are shaded.

e. Where concrete with a minimum specified compressive strength of 3,000 psi is used, spans in cells that are shaded shall be permitted to be multiplied by 1.05.

f. Lintel depth, *D*, is permitted to include the available height of wall located directly above the lintel, provided that the increased lintel depth spans the entire length of the lintel.

g. DR indicates design required.

h. The maximum clear opening width between two solid wall segments shall be 18 feet (5486 mm). See Section 611.7.2.1. Lintel spans in the table greater than 18 feet are shown for interpolation and information purposes only.

TABLE 611.8(10)
MAXIMUM ALLOWABLE CLEAR SPANS FOR WAFFLE-GRID AND SCREEN GRID LINTELS WITHOUT STIRRUPS IN NONLOAD-BEARING WALLS[c, d, e, f, g]

LINTEL DEPTH[h], *D* (inches)	FORM TYPE AND NOMINAL WALL THICKNESS (inches)					
	6-inch Waffle-grid[a]		8-inch Waffle-grid[a]		6-inch Screen-grid[b]	
	Lintel supporting					
	Concrete Wall	Light-framed Gable	Concrete Wall	Light-framed Gable	Concrete Wall	Light-framed Gable
	Maximum Clear Span of Lintel (feet - inches)					
8	10-3	8-8	8-8	8-3	—	—
12	9-2	7-6	7-10	7-1	8-8	6-9
16	10-11	10-0	9-4	9-3	—	—
20	12-5	12-2	10-7	11-2	—	—
24	13-9	14-2	11-10	12-11	13-0	12-9

For SI: 1 inch = 25.4 mm; 1 foot = 304.8 mm; Grade 40 = 280 MPa; Grade 60 = 420 MPa

a. Where lintels are formed with waffle-grid forms, form material shall be removed, if necessary, to create top and bottom flanges of the lintel that are not less than 3 inches in depth (in the vertical direction), are not less than 5 inches in width for 6-inch waffle-grid forms and not less than 7 inches in width for 8-inch waffle-grid forms. See Figure 611.8(3). Flat form lintels shall be permitted in lieu of waffle-grid lintels. See Tables 611.8(2) through 611.8(5).

b. Where lintels are formed with screen-grid forms, form material shall be removed if necessary to create top and bottom flanges of the lintel that are not less than 5 inches in width and not less than 2.5 inches in depth (in the vertical direction). See Figure 611.8(4). Flat form lintels shall be permitted in lieu of screen-grid lintels. See Tables 611.8(2) through 611.8(5).

c. See Table 611.3 for tolerances permitted from nominal thickness and minimum dimensions and spacing of cores.

d. Table values are based on concrete with a minimum specified compressive strength of 2,500 psi. See Note g.

e. Deflection criterion is *L/240*, where L is the clear span of the lintel in inches, or ½-inch, whichever is less.

f. Top and bottom reinforcement shall consist of a No. 4 bar having a minimum yield strength of 40,000 psi.

g. Where concrete with a minimum specified compressive strength of 3,000 psi is used, spans in shaded cells shall be permitted to be multiplied by 1.05.

h. Lintel depth, *D*, is permitted to include the available height of wall located directly above the lintel, provided that the increased lintel depth spans the entire length of the lintel.

611.9 Requirements for connections–general. Concrete walls shall be connected to footings, floors, ceilings and roofs in accordance with this section.

611.9.1 Connections between concrete walls and light-framed floor, ceiling and roof systems. Connections between concrete walls and light-framed floor, ceiling and roof systems using the prescriptive details of Figures 611.9(1) through 611.9(12) shall comply with this section and Sections 611.9.2 and 611.9.3.

611.9.1.1 Anchor bolts. Anchor bolts used to connect light-framed floor, ceiling and roof systems to concrete walls in accordance with Figures 611.9(1) through 611.9(12) shall have heads, or shall be rods with threads on both ends with a hex or square nut on the end embedded in the concrete. Bolts and threaded rods shall comply with Section 611.5.2.2. Anchor bolts

with J-or L-hooks shall not be used where the connection details in these figures are used.

611.9.1.2 Removal of stay-in-place form material at bolts. Holes in stay-in-place forms for installing bolts for attaching face-mounted wood ledger boards to the wall shall be a minimum of 4 inches (102 mm) in diameter for forms not greater than 1½ inches (38 mm) in thickness, and increased 1 inch (25 mm) in diameter for each ½-inch (13 mm) increase in form thickness. Holes in stay-in-place forms for installing bolts for attaching face-mounted cold-formed steel tracks to the wall shall be a minimum of 4 inches (102 mm) square. The wood ledger board or steel track shall be in direct contact with the concrete at each bolt location.

Exception: A vapor retarder or other material less than or equal to $^{1}/_{16}$-inch (1.6 mm) in thickness is permitted to be installed between the wood ledger or cold-formed track and the concrete.

611.9.2 Connections between concrete walls and light-framed floor systems. Connections between concrete walls and light-framed floor systems shall be in accordance with one of the following:

1. For floor systems of wood frame construction, the provisions of Section 611.9.1 and the prescriptive details of Figures 611.9(1) through 611.9(4), where permitted by the tables accompanying those figures. Portions of connections of wood-framed floor systems not noted in the figures shall be in accordance with Section 502, or AF&PA/WFCM, if applicable.

2. For floor systems of cold-formed steel construction, the provisions of Section 611.9.1 and the prescriptive details of Figures 611.9(5) through 611.9(8), where permitted by the tables accompanying those figures. Portions of connections of cold-formed-steel framed floor systems not noted in the figures shall be in accordance with Section 505, or AISI S230, if applicable.

3. Proprietary connectors selected to resist loads and load combinations in accordance with Appendix A (ASD) or Appendix B (LRFD) of PCA 100.

4. An engineered design using loads and load combinations in accordance with Appendix A (ASD) or Appendix B (LRFD) of PCA 100.

5. An engineered design using loads and material design provisions in accordance with this code, or in accordance with ASCE 7, ACI 318, and AF&PA/NDS for wood frame construction or AISI S100 for cold-formed steel frame construction.

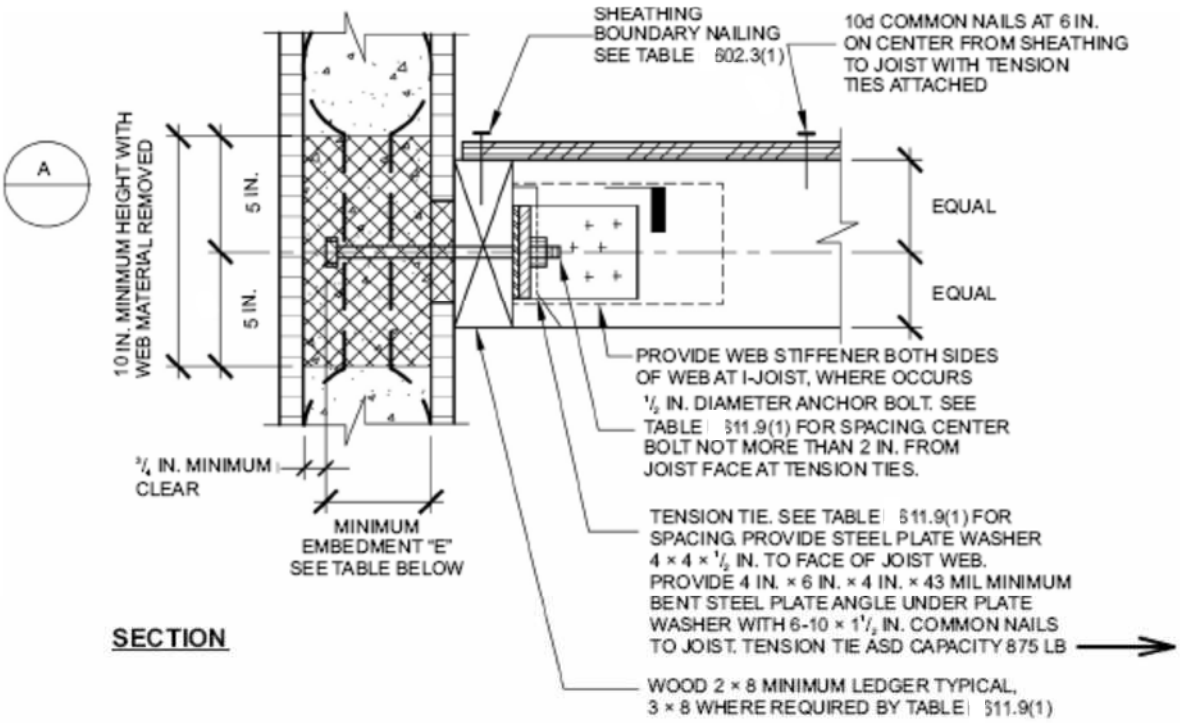

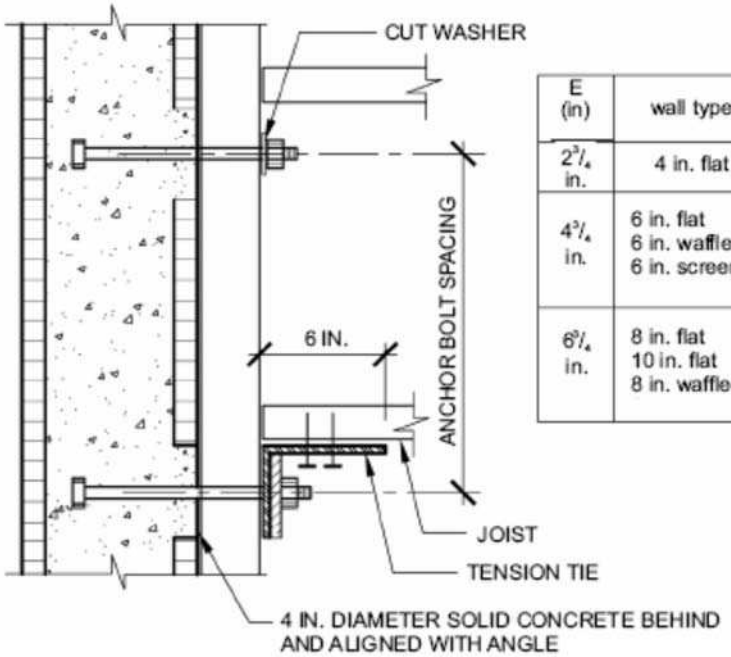

E (in)	wall type
2 3/4 in.	4 in. flat
4 3/4 in.	6 in. flat 6 in. waffle-grid 6 in. screen-grid
6 3/4 in.	8 in. flat 10 in. flat 8 in. waffle-grid

DETAIL A – PLAN VIEW

For SI: 1 mil = 0.0254 mm, 1 inch = 25.4 mm, 1 pound-force = 4.448 N.

FIGURE 611.9(1)
WOOD FRAMED FLOOR TO SIDE OF CONCRETE WALL, FRAMING PERPENDICULAR

611.9.3 Connections between concrete walls and light-framed ceiling and roof systems. Connections between concrete walls and light-framed ceiling and roof systems shall be in accordance with one of the following:

1. For ceiling and roof systems of wood frame construction, the provisions of Section 611.9.1 and the prescriptive details of Figures 611.9(9) and 611.9(10), where permitted by the tables accompanying those figures. Portions of connections of wood-framed ceiling and roof systems not noted in the figures shall be in accordance with Section 802, or AF&PA/WFCM, if applicable.

2. For ceiling and roof systems of cold-formed-steel construction, the provisions of Section 611.9.1 and the prescriptive details of Figures 611.9(11) and 611.9(12), where permitted by the tables accompanying those figures. Portions of connections of cold-formed-steel framed ceiling and roof systems not noted in the figures shall be in accordance with Section R804, or AISI S230, if applicable.

3. Proprietary connectors selected to resist loads and load combinations in accordance with Appendix A (ASD) or Appendix B (LRFD) of PCA 100.

4. An engineered design using loads and load combinations in accordance with Appendix A (ASD) or Appendix B (LRFD) of PCA 100.

5. An engineered design using loads and material design provisions in accordance with this code, or in accordance with ASCE 7, ACI 318, and AF&PA/NDS for wood-frame construction or AISI S100 for cold-formed-steel frame construction.

611.10 Floor, roof and ceiling diaphragms. Floors and roofs in all buildings with exterior walls of concrete shall be designed and constructed as diaphragms. Where gable-end walls occur, ceilings shall also be designed and constructed as diaphragms. The design and construction of floors, roofs and ceilings of wood framing or cold-formed-steel framing serving as diaphragms shall comply with the applicable requirements of this code, or AF&PA/WFCM or AISI S230, if applicable.

TABLE 611.9(1)
WOOD FRAMED FLOOR TO SIDE OF CONCRETE WALL, FRAMING PERPENDICULAR[a, b, c]

ANCHOR BOLT SPACING (inches)	TENSION TIE SPACING (inches)	BASIC WIND SPEED (mph)					
		85B	90B	100B	110B	120B	130B
				85C	90C	100C	110C
					85D	90D	100D
12	12						
12	24						
12	36						
12	48						
16	16					A	A
16	32						
16	48						
19.2	19.2	A	A	A	A	A	
19.2	38.4	A	A	A			

For SI: 1 inch = 25.4 mm; 1 mile per hour = 0.447 m/s.

a. This table is for use with the detail in Figure R611.9(1). Use of this detail is permitted where a cell is not shaded and prohibited where shaded.

b. Wall design per other provisions of Section R611 is required.

c. Letter “A” indicates that a minimum nominal 3 x 8 ledger is required.

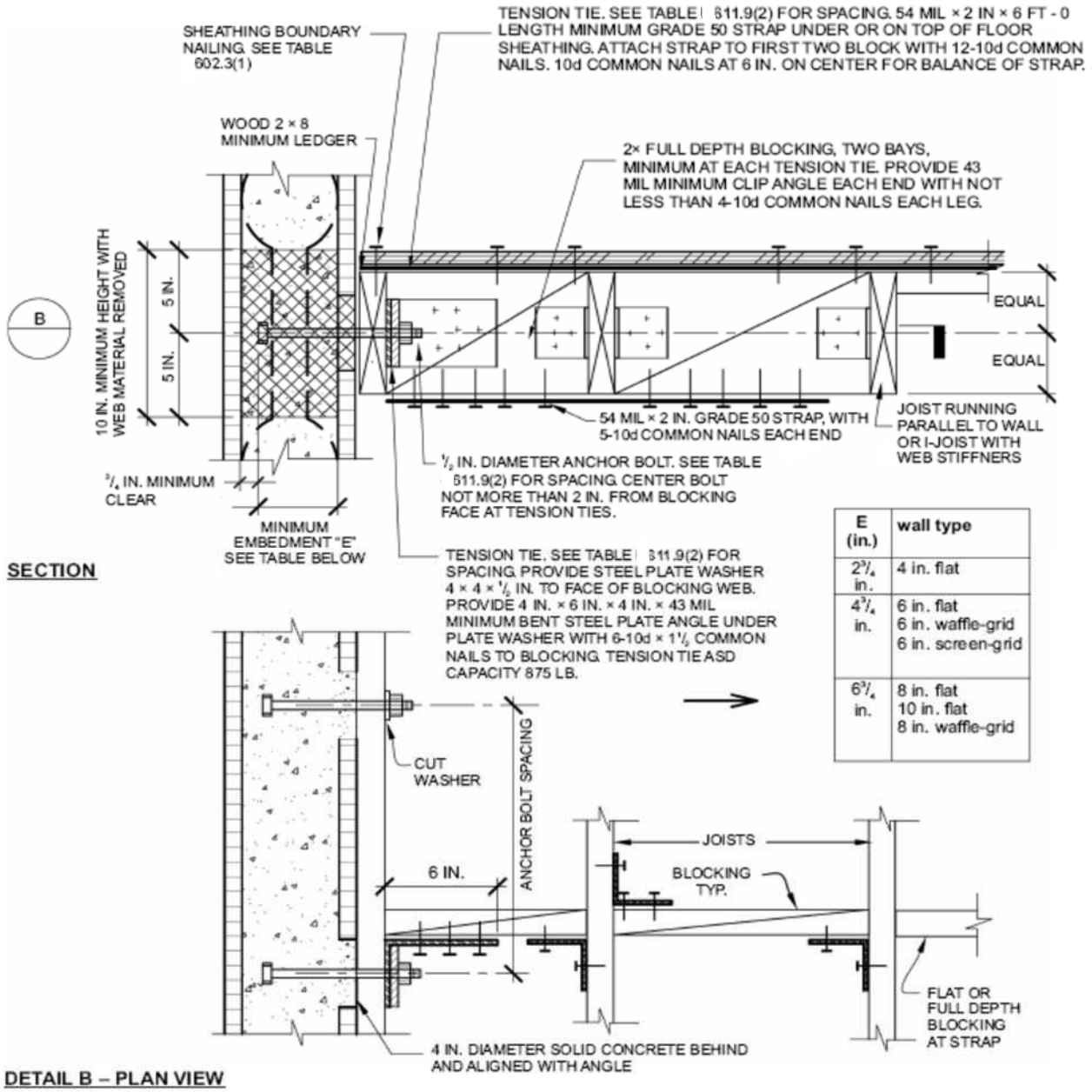

E (in.)	wall type
2¾ in.	4 in. flat
4¾ in.	6 in. flat 6 in. waffle-grid 6 in. screen-grid
6¾ in.	8 in. flat 10 in. flat 8 in. waffle-grid

For SI: 1 mil = 0.0254 mm, 1 inch = 25.4 mm, 1 foot = 304.8 mm, 1 pound-force = 4.448 N.

FIGURE 611.9(2)
WOOD FRAMED FLOOR TO SIDE OF CONCRETE WALL FRAMING PARALLEL

TABLE 611.9(2)
WOOD FRAMED FLOOR TO SIDE OF CONCRETE WALL, FRAMING PARALLEL[a, b]

ANCHOR BOLT SPACING (inches)	TENSION TIE SPACING (inches)	BASIC WIND SPEED (mph) AND WIND EXPOSURE CATEGORY					
		85B	90B	100B	110B	120B	130B
				85C	90C	100C	110C
					85D	90D	100D
12	12						
12	24						
12	36						
12	48						
16	16						
16	32						
16	48						
19.2	19.2						
19.2	38.4						
24	24						
24	48						

For SI: 1 inch = 25.4 mm; 1 mph = 0.447 m/s.

a. This table is for use with the detail in Figure 611.9(2). Use of this detail is permitted where a cell is not shaded and prohibited where shaded.

b. Wall design per other provisions of Section 611 is required.

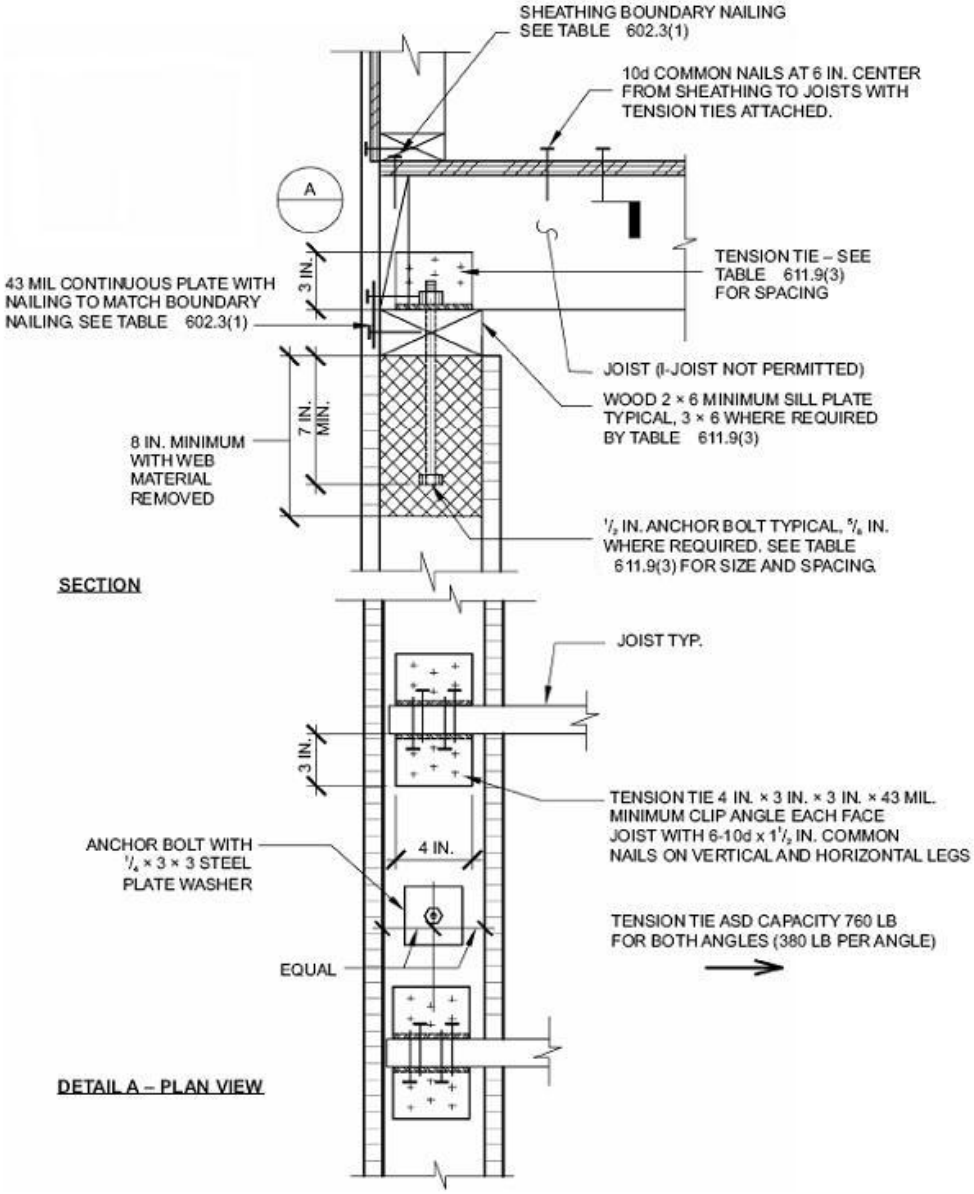

For SI: 1 mil = 0.0254 mm, 1 inch = 25.4 mm, 1 pound-force = 4.448 N.

FIGURE 611.9(3)
WOOD FRAMED FLOOR TO TOP OF CONCRETE WALL FRAMING PERPENDICULAR

TABLE 611.9(3)
WOOD FRAMED FLOOR TO TOP OF CONCRETE WALL, FRAMING PERPENDICULAR[a, b, c, d, e]

ANCHOR BOLT SPACING (inches)	TENSION TIE SPACING (inches)	BASIC WIND SPEED (mph) AND WIND EXPOSURE CATEGORY					
		85B	90B	100B	110B	120B	130B
				85C	90C	100C	110C
					85D	90D	100D
12	12						
12	24						
12	36						
12	48						
16	16					6 A	6 B
16	32					6 A	6 B
16	48						
19.2	19.2				6 A	6 A	6 B
19.2	38.4				6 A	6 A	
24	24			6 A	6 B	6 A	
24	48			6 A			

For SI: 1 inch = 25.4 mm; 1 mile per hour = 0.447 m/s.

a. This table is for use with the detail in Figure 611.9(3). Use of this detail is permitted where cell is not shaded, prohibited where shaded.

b. Wall design per other provisions in Section 611 is required.

c. For wind design, minimum 4-inch nominal wall is permitted in unshaded cells with no number.

d. Number 6 indicates minimum permitted nominal wall thickness in inches necessary to develop required strength (capacity) of connection. As a minimum, this nominal thickness shall occur in the portion of the wall indicated by the cross-hatching in Figure 611.9(3). For the remainder of the wall, see Note b.

e. Letter "A" indicates that a minimum nominal 3 x 6 sill plate is required. Letter "B" indicates that a $^5/_8$ inch (16 mm) diameter anchor bolt and a minimal nominal 3 x 6 sill plate are required.

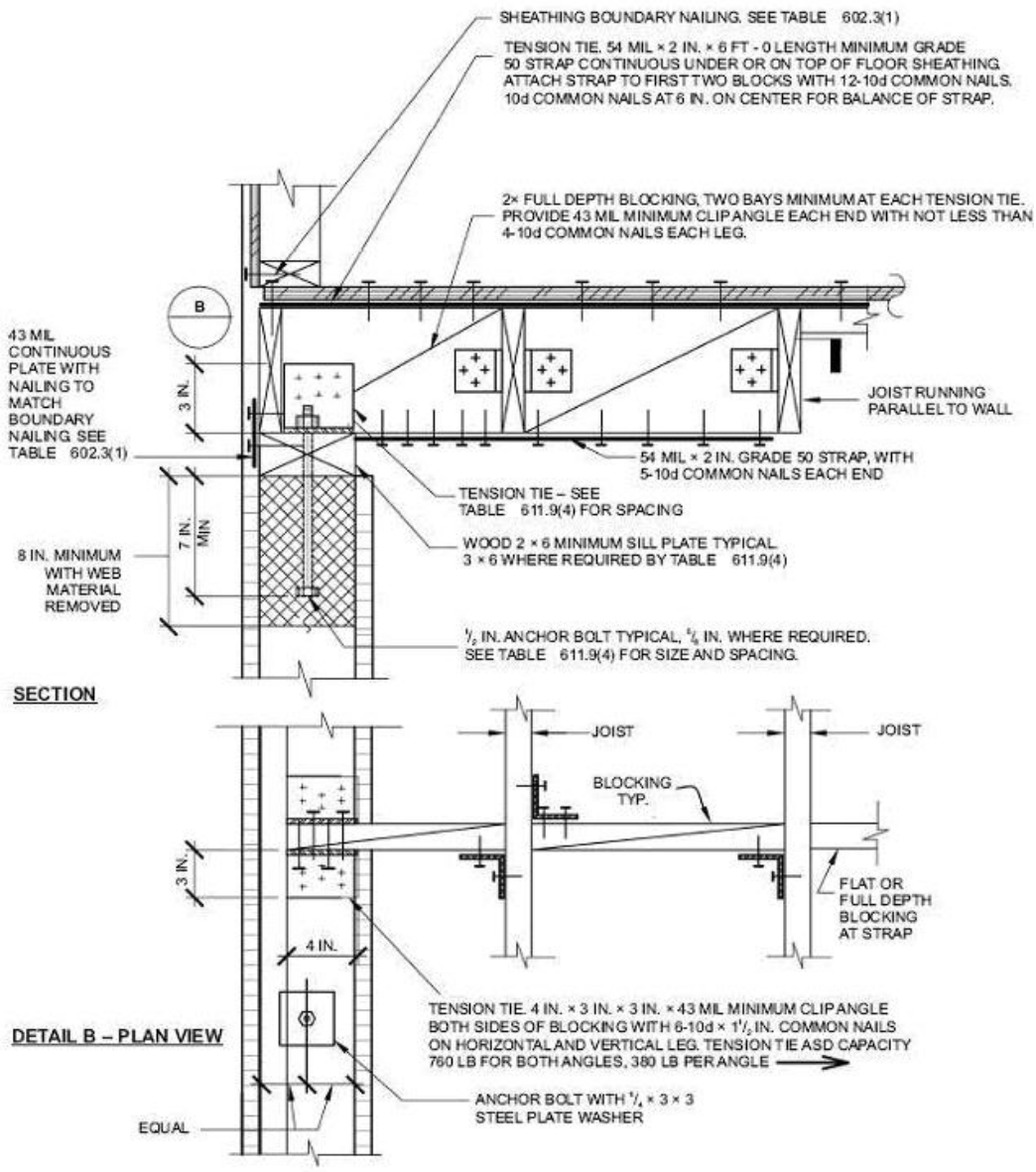

For SI: 1 mil = 0.0254 mm, 1 inch = 25.4 mm, 1 foot = 304.8 mm, 1 pound-force = 4.448 N.

FIGURE 611.9(4)
WOOD FRAMED FLOOR TO TOP OF CONCRETE WALL FRAMING PARALLEL

TABLE 611.9(4)
WOOD FRAMED FLOOR TO TOP OF CONCRETE WALL, FRAMING PARALLEL[a, b, c, d, e]

ANCHOR BOLT SPACING (inches)	TENSION TIE SPACING (inches)	BASIC WIND SPEED (mph) AND WIND EXPOSURE CATEGORY					
		85B	90B	100B	110B	120B	130B
				85C	90C	100C	110C
					85D	90D	100D
	12						
12	24						
12	36						
12	48						
16	16					6 A	6 B
16	32					6 A	6 B
16	48						
19.2	19.2				6 A	6 A	6 B
19.2	38.4				6 A	6 A	
24	24			6 A	6 B	6 B	
24	48			6 A			

For SI: 1 inch = 25.4 mm; 1 mile per hour = 0.447 m/s.

a. This table is for use with the detail in Figure 611.9(4). Use of this detail is permitted where a cell is not shaded, prohibited where shaded.

b. Wall design per other provisions of Section 611 is required.

c. For wind design, minimum 4-inch nominal wall is permitted in unshaded cells with no number.

d. Number 6 indicates minimum permitted nominal wall thickness in inches necessary to develop required strength (capacity) of connection. As a minimum, this nominal thickness shall occur in the portion of the wall indicated by the cross-hatching in Figure 611.9(4). For the remainder of the wall, see Note b.

e. Letter "A" indicates that a minimum nominal 3 x 6 sill plate is required. Letter "B" indicates that a $^5/_8$ inch diameter anchor bolt and a minimal nominal 3 x 6 sill plate are required.

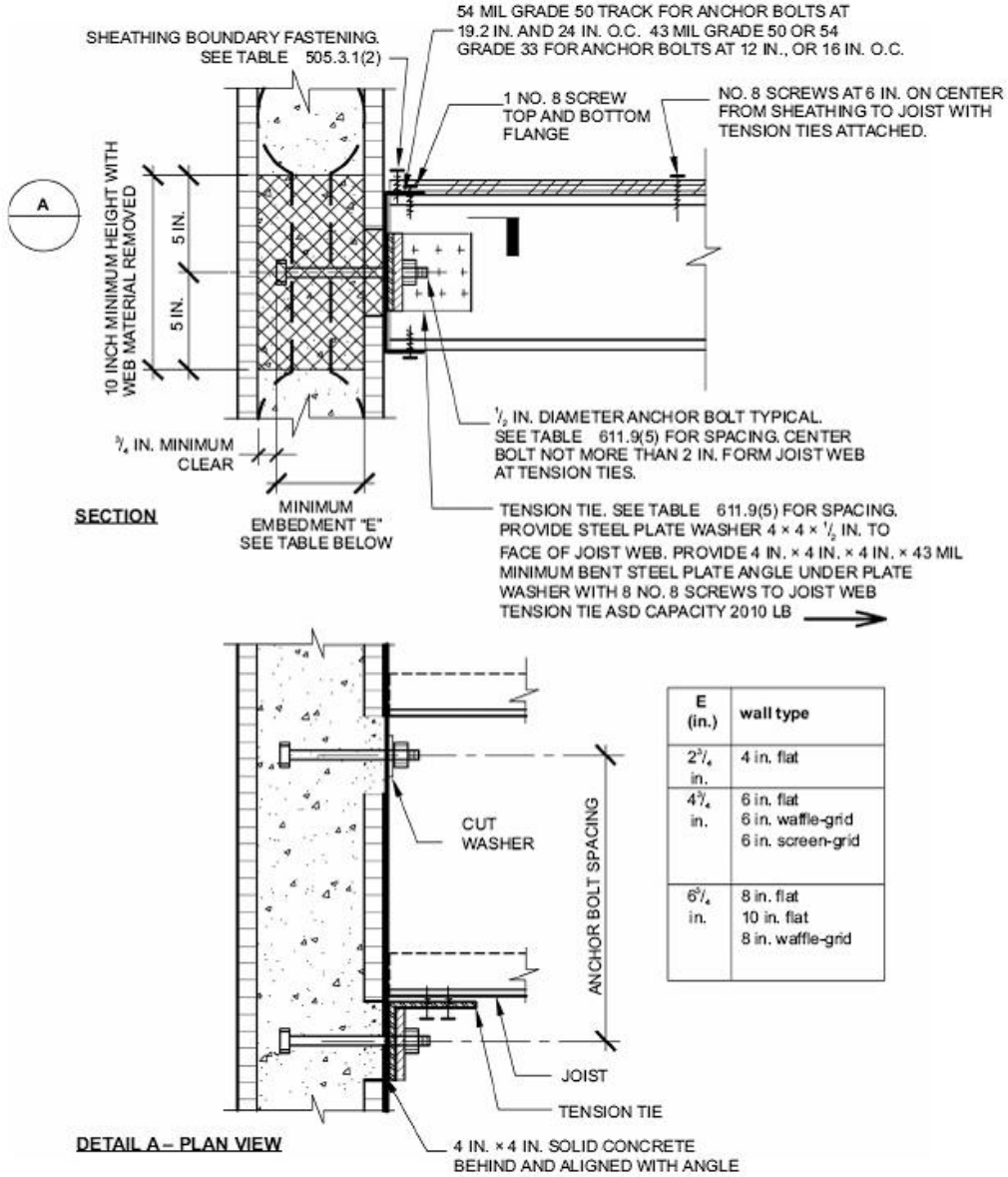

E (in.)	wall type
2 3/4 in.	4 in. flat
4 3/4 in.	6 in. flat 6 in. waffle-grid 6 in. screen-grid
6 3/4 in.	8 in. flat 10 in. flat 8 in. waffle-grid

For SI: 1 mil = 0.0254 mm, 1 inch = 25.4 mm, 1 pound-force = 4.448 N.

FIGURE 611.9(5)
COLD-FORMED STEEL FLOOR TO SIDE OF CONCRETE WALL, FRAMING PERPENDICULAR

TABLE 611.9(5)
COLD-FORMED STEEL FRAMED FLOOR TO SIDE OF CONCRETE WALL, FRAMING PERPENDICULAR[a, b, c, d]

ANCHOR BOLT SPACING (inches)	TENSION TIE SPACING (inches)	BASIC WIND SPEED (mph) AND WIND EXPOSURE CATEGORY					
		85B	90B	100B	110B	120B	130B
				85C	90C	100C	110C
					85D	90D	100D
12	12						
12	24						
12	36						6
12	48					6	6
16	16						
16	32						
16	48					6	6
19.2	19.2						
19.2	38.4						6
24	24						
24	48					6	6

For SI: 1 inch = 25.4 mm; 1 mile per hour = 0.4470 m/s.

a. This table is for use with the detail in Figure 611.9(5). Use of this detail is permitted where a cell is not shaded.

b. Wall design per other provisions of Section 611 is required.

c. For wind design, minimum 4-inch nominal wall is permitted in unshaded cells with no number.

d. Number 6 indicates minimum permitted nominal wall thickness in inches necessary to develop required strength (capacity) of connection. As a minimum, this nominal thickness shall occur in the portion of the wall indicated by the cross-hatching in Figure 611.9(5). For the remainder of the wall, see Note b.

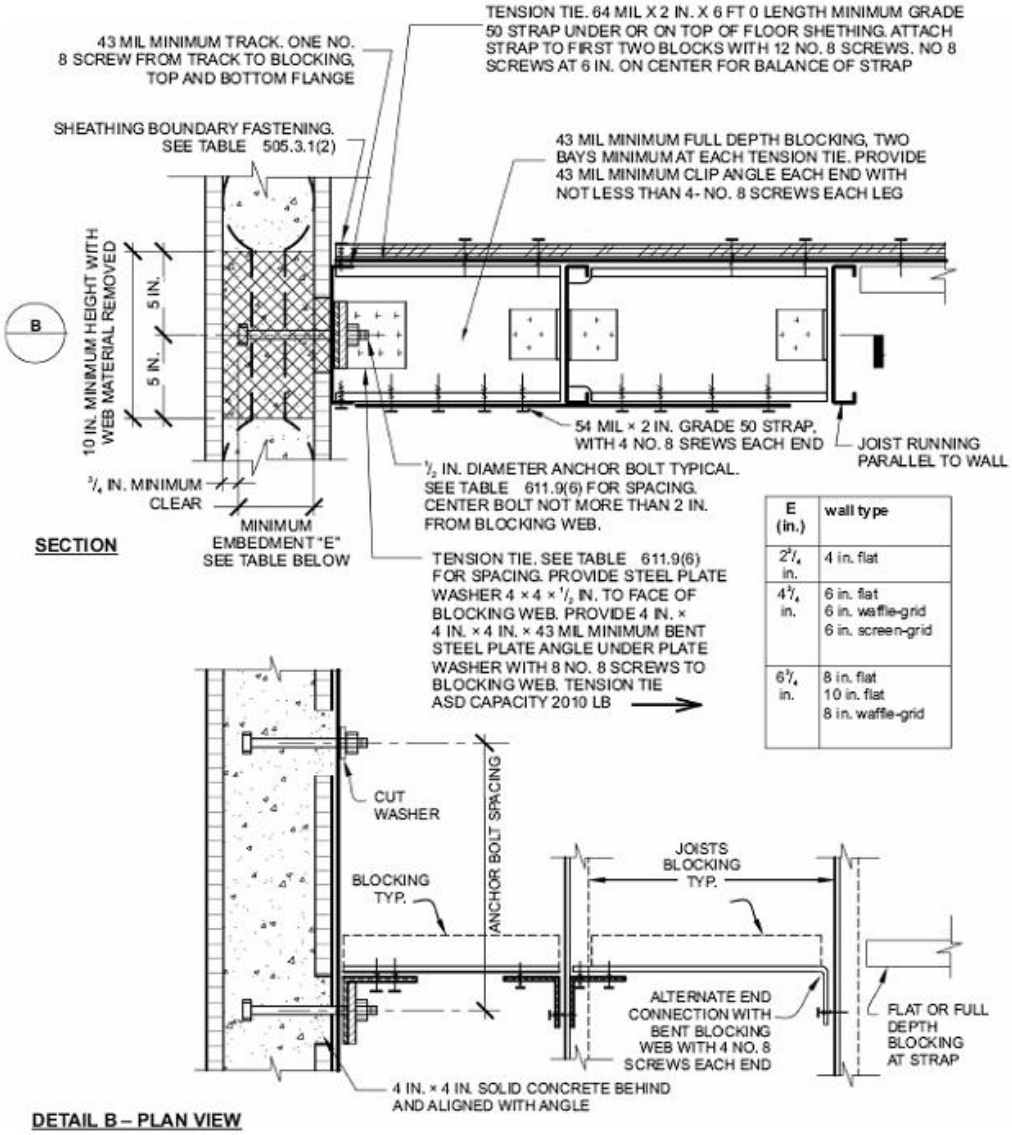

E (in.)	wall type
2¾ in.	4 in. flat
4¾ in.	6 in. flat 6 in. waffle-grid 6 in. screen-grid
6¾ in.	8 in. flat 10 in. flat 8 in. waffle-grid

For SI: 1 mil = 0.0254 mm, 1 inch = 25.4 mm, 1 pound-force = 4.448 N.

FIGURE 611.9(6)
COLD-FORMED STEEL FLOOR TO SIDE OF CONCRETE WALL, FRAMING PARALLEL

TABLE 611.9(6)
COLD-FORMED STEEL FRAMED FLOOR TO SIDE OF CONCRETE WALL, FRAMING PARALLEL[a, b, c, d]

ANCHOR BOLT SPACING (inches)	TENSION TIE SPACING (inches)	BASIC WIND SPEED (mph) AND WIND EXPOSURE CATEGORY					
		85B	90B	100B	110B	120B	130B
				85C	90C	100C	110C
					85D	90D	100D
12	12						
12	24						
12	36						6
12	48					6	6
16	16						
16	32						
16	48					6	6
19.2	19.2						
19.2	38.4						6
24	24						
24	48					6	6

For SI: 1 inch = 25.4 mm; 1 mile per hour = 0.447 m/s.

a. This table is for use with the detail in Figure 611.9(6). Use of this detail is permitted where a cell is not shaded.

b. Wall design per other provisions of Section 611 is required.

c. For wind design, minimum 4-inch nominal wall is permitted in unshaded cells with no number.

d. Number 6 indicates minimum permitted nominal wall thickness in inches necessary to develop required strength (capacity) of connection. As a minimum, this nominal thickness shall occur in the portion of the wall indicated by the cross-hatching in Figure 611.9(6). For the remainder of the wall, see Note b.

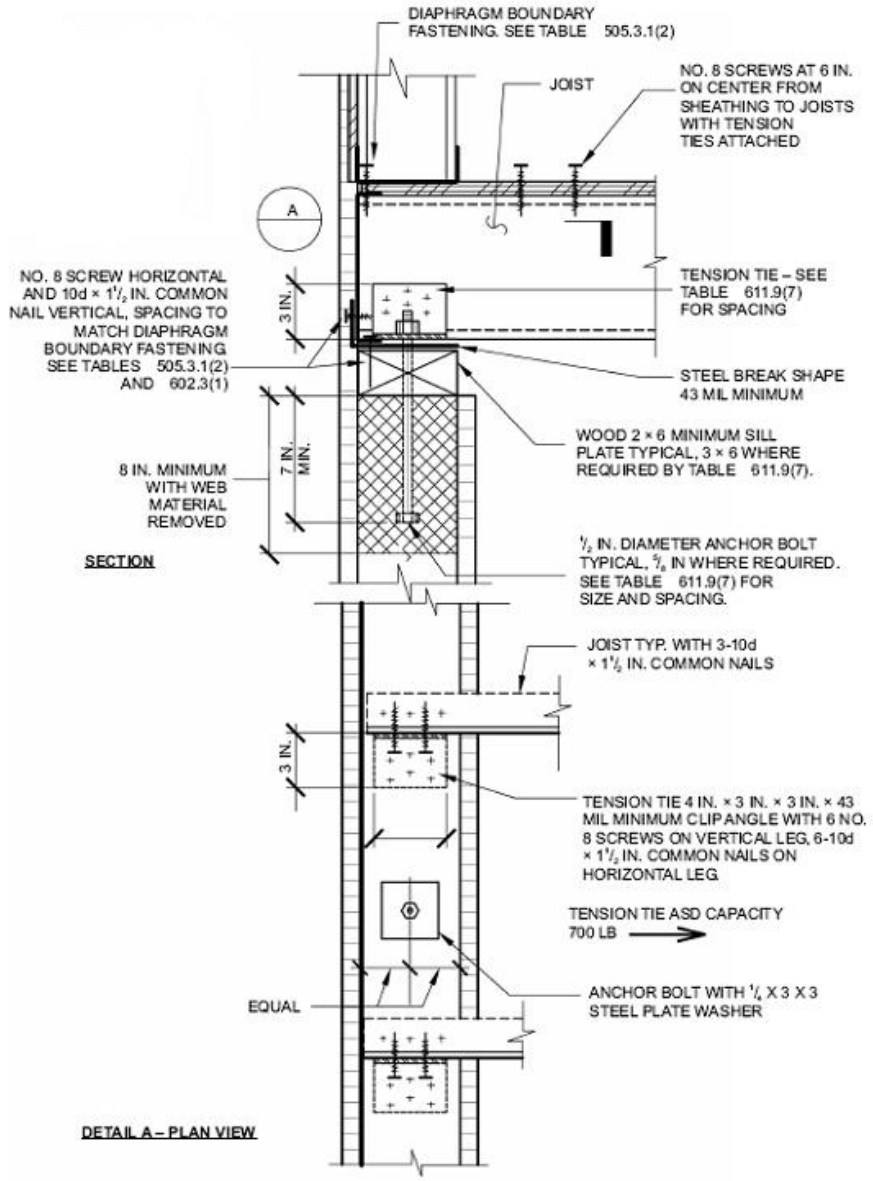

For SI: 1 mil = 0.0254 mm, 1 inch = 25.4 mm, 1 pound-force = 4.448 N.

FIGURE 611.9(7)
COLD-FORMED STEEL FLOOR TO TOP OF CONCRETE WALL FRAMING PERPENDICULAR

TABLE 611.9(7)
COLD-FORMED STEEL FRAMED FLOOR TO TOP OF CONCRETE WALL, FRAMING PERPENDICULAR[a, b, c, d, e]

ANCHOR BOLT SPACING (inches)	TENSION TIE SPACING (inches)	BASIC WIND SPEED (mph) AND WIND EXPOSURE CATEGORY					
		85B	90B	100B	110B	120B	130B
				858C	90C	100C	110C
					85D	90D	100D
12	12						
12	24						
16	16					6 A	6 B
16	32					6 A	6 B
19.2	19.2				6 A	8 B	8 B
19.2	38.4				6 A	8 B	8 B
24	24			6 A	8 B	8 B	

For SI: 1 inch = 25.4 mm; 1 mph = 0.447 m/s.

a. This table is for use with the detail in Figure 611.9(7). Use of this detail is permitted where a cell is not shaded, prohibited where shaded.

b. Wall design per other provisions of Section 611 is required.

c. For wind design, minimum 4-inch nominal wall is permitted in unshaded cells with no number.

d. Numbers 6 and 8 indicate minimum permitted nominal wall thickness in inches necessary to develop required strength (capacity) of connection. As a minimum, this nominal thickness shall occur in the portion of the wall indicated by the cross-hatching in Figure 611.9(7). For the remainder of the wall, see Note b.

e. Letter "A" indicates that a minimum nominal 3 x 6 sill plate is required. Letter "B" indicates that a $^5/_8$ inch diameter anchor bolt and a minimum nominal 3 x 6 sill plate are required.

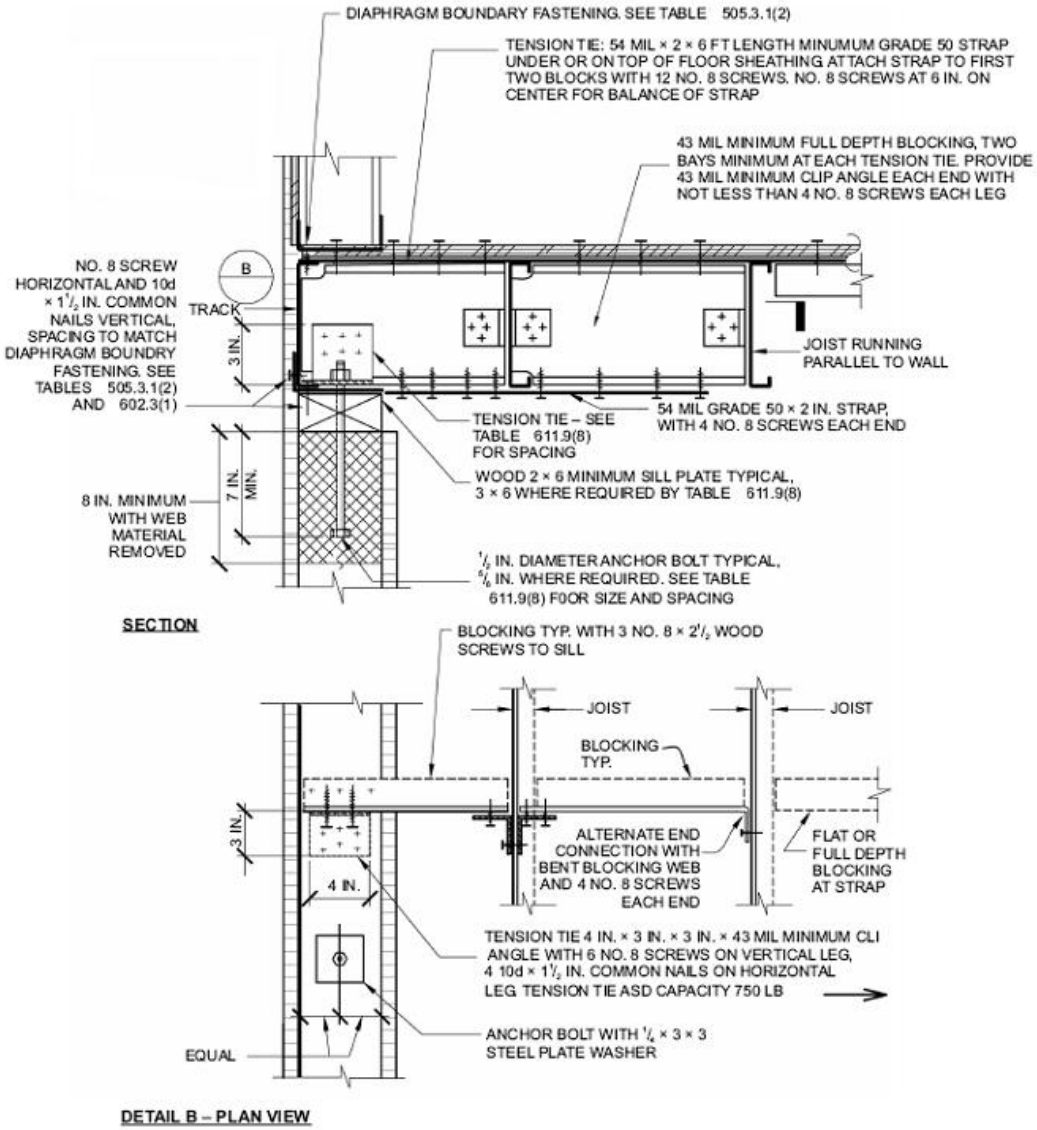

For SI: 1 mil = 0.0254 mm, 1 inch = 25.4 mm, 1 pound-force = 4.448 N.

FIGURE 611.9(8)
COLD-FORMED STEEL FLOOR TO TOP OF CONCRETE WALL, FRAMING PARALLEL

TABLE 611.9(8)
COLD-FORMED STEEL FRAMED FLOOR TO TOP OF CONCRETE WALL, FRAMING PARALLEL[a, b, c, d, e]

ANCHOR BOLT SPACING (inches)	TENSION TIE SPACING (inches)	BASIC WIND SPEED (mph) AND WIND EXPOSURE CATEGORY					
		85B	90B	100B	110B	120B	130B
				85C	90C	100C	110C
					85D	90D	100D
12	12						
12	24						
16	16					6 A	6 B
16	32					6 A	6 B
19.2	19.2				6 A	8 B	8 B
19.2	38.4				6 A	8 B	8 B
24	24			6 A	8 B	8 B	

For SI: 1 inch = 25.4 mm; 1 mph = 0.447 m/s.

a. This table is for use with the detail in Figure 611.9(8). Use of this detail is permitted where a cell is not shaded, prohibited where shaded.

b. Wall design per other provisions of Section 611 is required.

c. For wind design, minimum 4-inch nominal wall is permitted in unshaded cells with no number.

d. Numbers 6 and 8 indicate minimum permitted nominal wall thickness in inches necessary to develop required strength (capacity) of connection. As a minimum, this nominal thickness shall occur in the portion of the wall indicated by the cross-hatching in Figure 611.9(8). For the remainder of the wall, see Note b.

e. Letter "A" indicates that a minimum nominal 3 x 6 sill plate is required. Letter "B" indicates that a $^5/_8$ inch diameter anchor bolt and a minimum nominal 3 x 6 sill plate are required.

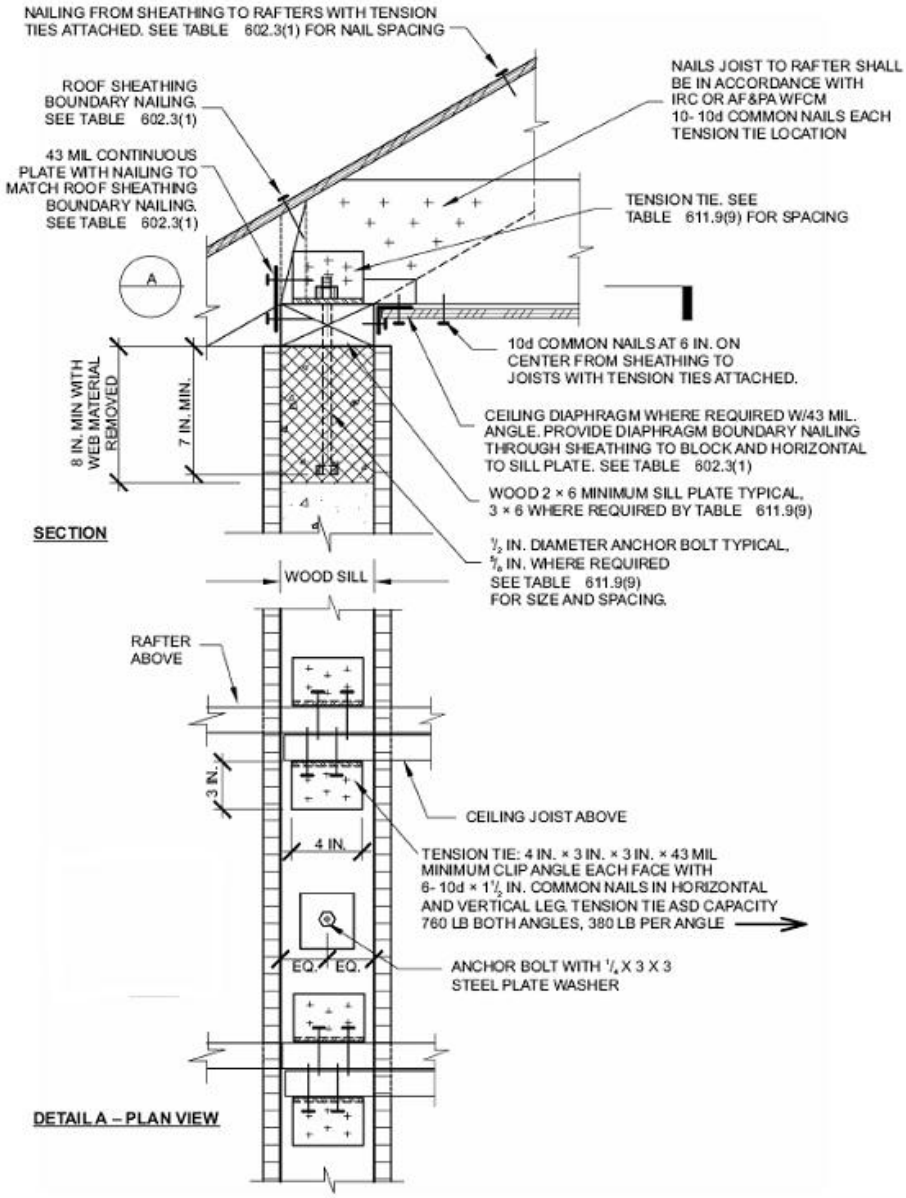

For SI: 1 mil = 0.0254 mm, 1 inch = 25.4 mm, 1 pound-force = 4.448 N.

FIGURE 611.9(9)
WOOD FRAMED ROOF TO TOP OF CONCRETE WALL, FRAMING PERPENDICULAR

TABLE 611.9(9)
WOOD FRAMED ROOF TO TOP OF CONCRETE WALL, FRAMING PERPENDICULAR[a, b, c, d, e]

ANCHOR BOLT SPACING (inches)	TENSION TIE SPACING (inches)	BASIC WIND SPEED (mph) AND WIND EXPOSURE CATEGORY					
		85B	90B	100B	110B	120B	130B
				85C	90C	100C	110C
					85D	90D	100D
12	12						
12	24						
12	36						
12	48						
16	16						6
16	32						6
16	48						
19.2	19.2					6	6 A
19.2	38.4					6	
24	24				6 A	6 A	6 B
24	48						

For SI: 1 inch = 25.4 mm; 1 mph = 0.447 m/s.

a. This table is for use with the detail in Figure 611.9(9). Use of this detail is permitted where cell a is not shaded, prohibited where shaded.

b. Wall design per other provisions of Section 611 is required.

c. For wind design, minimum 4-inch nominal wall is permitted in unshaded cells with no number.

d. Number 6 indicates minimum permitted nominal wall thickness in inches necessary to develop required strength (capacity) of connection. As a minimum, this nominal thickness shall occur in the portion of the wall indicated by the cross-hatching in Figure 611.9(9). For the remainder of the wall, see Note b.

e. Letter "A" indicates that a minimum nominal 3 x 6 sill plate is required. Letter "B" indicates that a $^5/_8$ inch diameter anchor bolt and a minimum nominal 3 x 6 sill plate are required.

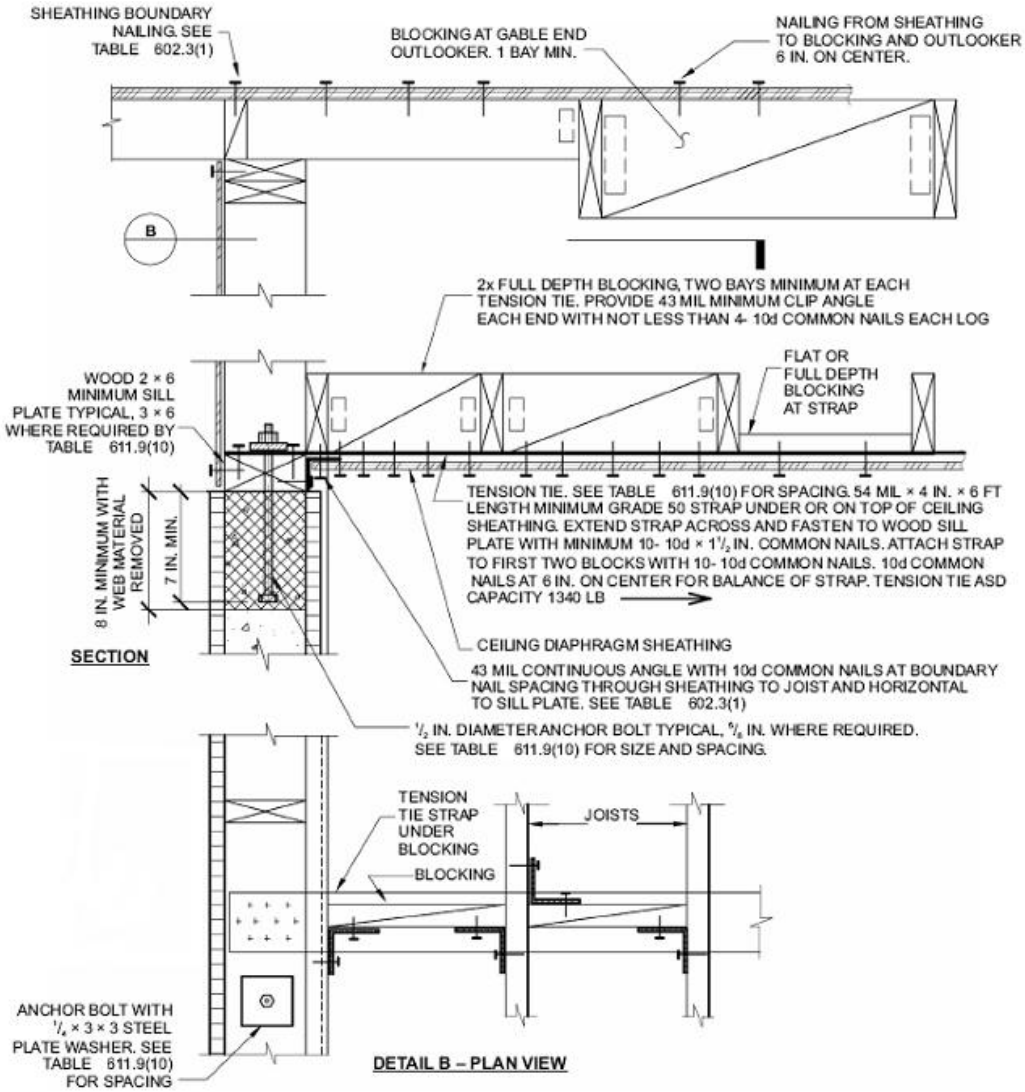

For SI: 1 mil = 0.0254 mm, 1 inch = 25.4 mm, 1 foot = 304.8 mm, 1 pound-force = 4.448 N.

FIGURE 611.9(10)
WOOD FRAMED ROOF TO TOP OF CONCRETE WALL FRAMING PARALLEL

TABLE 611.9(10)
WOOD FRAMED ROOF TO TOP OF CONCRETE WALL, FRAMING PARALLEL[a, b, c, d, e]

ANCHOR BOLT SPACING (inches)	TENSION TIE SPACING (inches)	BASIC WIND SPEED (mph) AND WIND EXPOSURE CATEGORY					
		85B	90B	100B	110B	120B	130B
				85C	90C	100C	110C
					85D	90D	100D
12	12						
12	24						
12	36						
12	48						
16	16					6	6
16	32					6	6
16	48					6	6
19.2	19.2				6	6	6 A
19.2	38.4				6	6	6 A
24	24			6	6 A	6 A	6 B
24	48			6	6 A	6 B	6 B

For SI: 1 inch = 25.4 mm; I mph = 0.447 m/s.

a. This table is for use with the detail in Figure 611.9(10). Use of this detail is permitted where a cell is not shaded.

b. Wall design per other provisions of Section 611 is required.

c. For wind design, minimum 4-inch nominal wall is permitted in cells with no number.

d. Number 6 indicates minimum permitted nominal wall thickness in inches necessary to develop required strength (capacity) of connection. As a minimum, this nominal thickness shall occur in the portion of the wall indicated by the cross-hatching in Figure 611.9(10). For the remainder of the wall, see Note b.

e. Letter "A" indicates that a minimum nominal 3 x 6 sill plate is required. Letter "B" indicates that a $^5/_8$ inch diameter anchor bolt and a minimum nominal 3 x 6 sill plate are required.

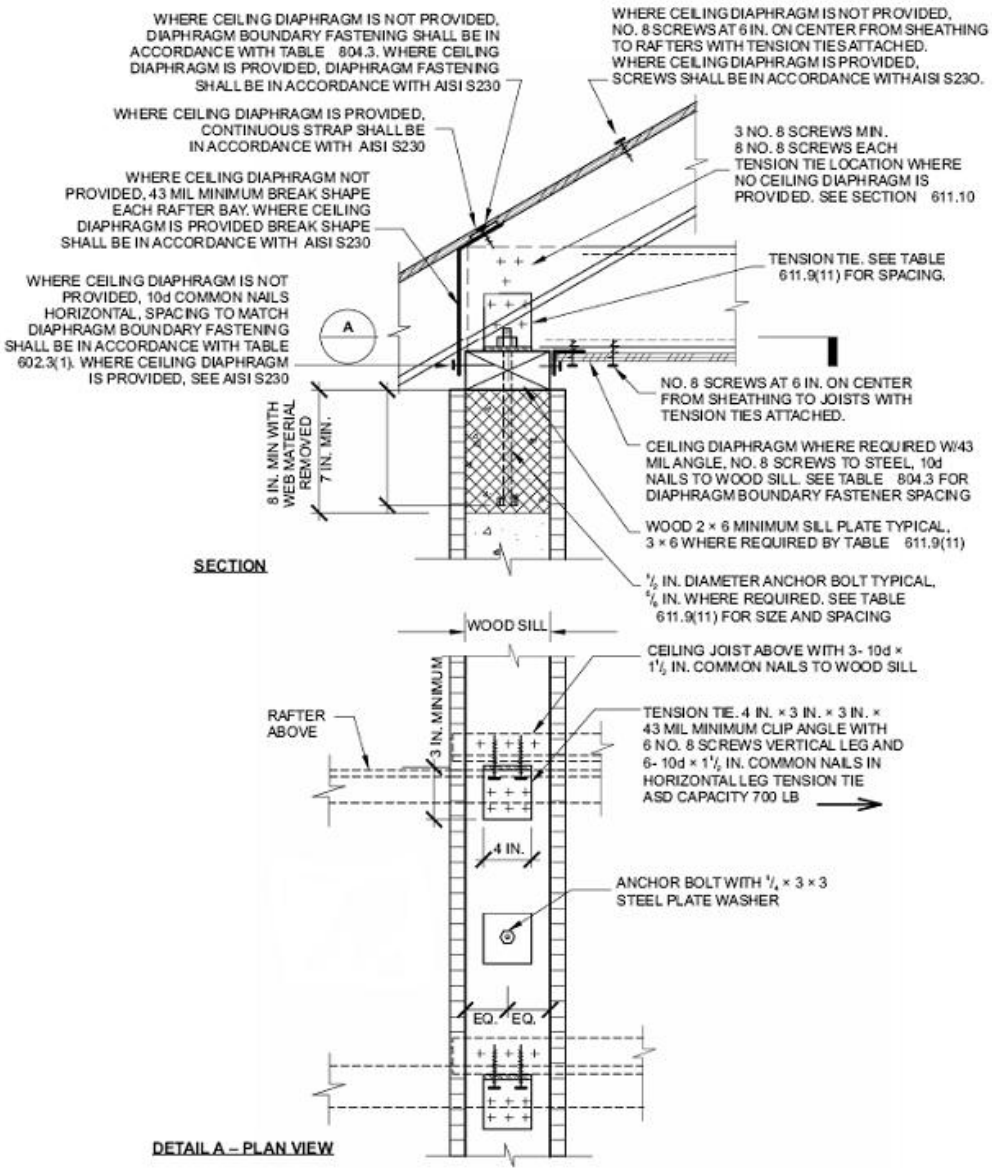

For SI: 1 mil = 0.0254 mm, 1 inch = 25.4 mm, 1 pound-force = 4.448 N.

FIGURE 611.9(11)
COLD-FORMED STEEL ROOF TO TOP OF CONCRETE WALL, FRAMING PERPENDICULAR

TABLE 611.9(11)
COLD-FORMED STEEL ROOF TO TOP OF CONCRETE WALL, FRAMING PERPENDICULAR[a, b, c, d, e]

ANCHOR BOLT SPACING (inches)	TENSION TIE SPACING (inches)	BASIC WIND SPEED (mph) AND WIND EXPOSURE CATEGORY					
		85B	90B	100B	110B	120B	130B
				85C	90C	100C	110C
					85D	90D	100D
12	12						
12	24						
16	16					6	6
16	32					6	6
19.2	19.2				6	6	8 B
19.2	38.4				6	6	8 B
24	24			6	6	8 B	

For SI: 1 inch = 25.4 mm; 1 mile per hour = 0.447 m/s.

a. This table is for use with the detail in Figure 611.9(11). Use of this detail is permitted where a cell is not shaded, prohibited where shaded.

b. Wall design per other provisions of Section 611 is required.

c. For wind design, minimum 4-inch nominal wall is permitted in unshaded cells with no number.

d. Numbers 6 and 8 indicate minimum permitted nominal wall thickness in inches necessary to develop required strength (capacity) of connection. As a minimum, this nominal thickness shall occur in the portion of the wall indicated by the cross-hatching in Figure 611.9(11). For the remainder of the wall, see Note b.

e. Letter "B" indicates that a $^5/_8$ inch diameter anchor bolt and a minimum nominal 3 x 6 sill plate are required.

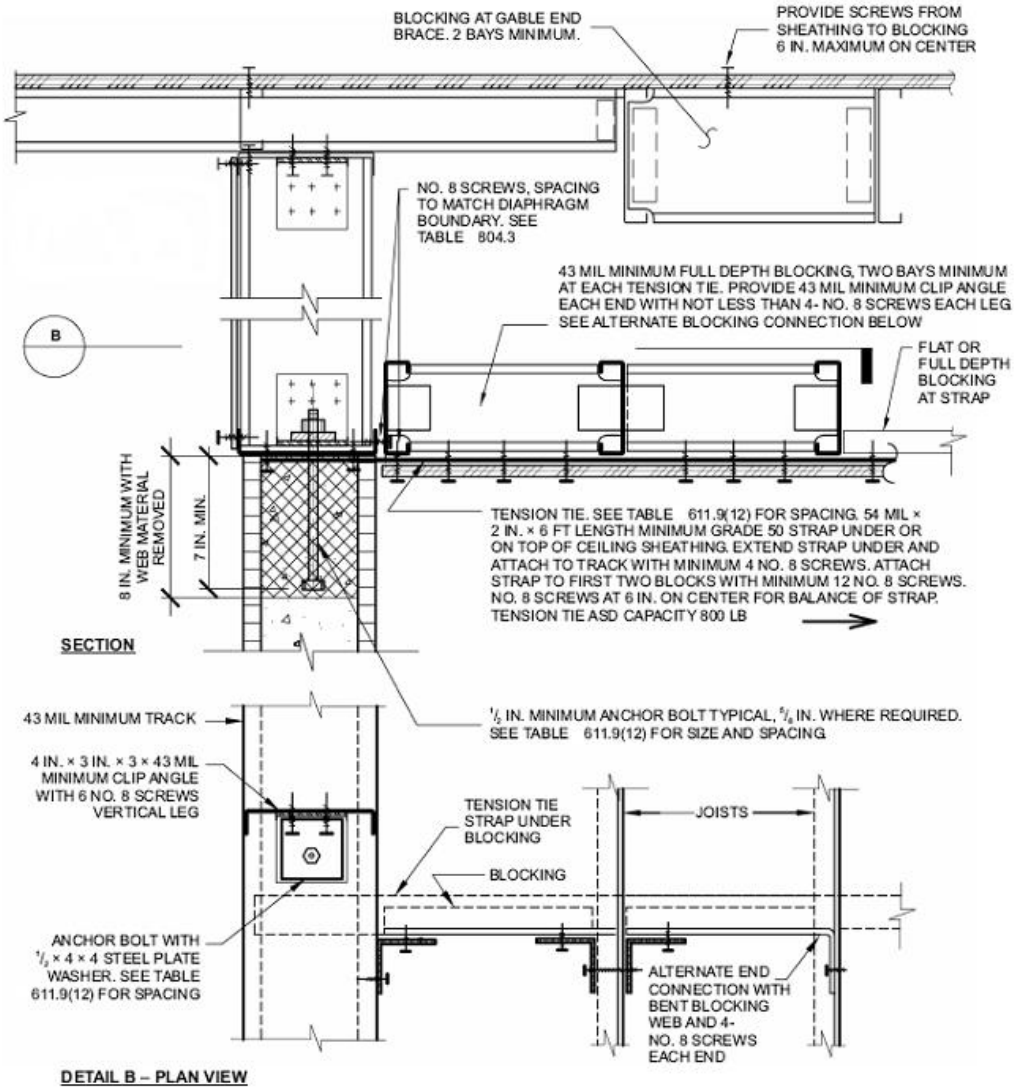

For SI: 1 mil = 0.0254 mm, 1 inch = 25.4 mm, 1 foot = 304.8 mm, 1 pound-force = 4.448 N.

FIGURE 611.9(12)
COLD-FORMED STEEL ROOF TO TOP OF CONCRETE WALL, FRAMING PARALLEL

TABLE 611.9(12)
COLD-FORMED STEEL ROOF TO TOP OF CONCRETE WALL, FRAMING PARALLEL[a, b, c, d, e]

ANCHOR BOLT SPACING (inches)	TENSION TIE SPACING (inches)	BASIC WIND SPEED (mph) AND WIND EXPOSURE CATEGORY					
		85B	90B	100B	110B	120B	130B
				85C	90C	100C	110C
					85D	90D	100D
12	12						
12	24						
16	16						
16	32						
19.2	19.2					6	6
19.2	38.4					6	6
24	24			6	6	8 B	8 B

For SI: 1 inch = 25.4 mm; 1 mile per hour = 0.447 m/s.
a. This table is for use with the detail in Figure 611.9(12). Use of this detail is permitted where a cell is not shaded.
b. Wall design per other provisions of Section 611 is required.
c. For wind design, minimum 4-inch nominal wall is permitted in cells with no number.
d. Numbers 6 and 8 indicate minimum permitted nominal wall thickness in inches necessary to develop required strength (capacity) of connection. As a minimum, this nominal thickness shall occur in the portion of the wall indicated by the cross-hatching in Figure 611.9(12). For the remainder of the wall, see Note b.
e. Letter"B" indicates that a $^5/_8$ inch diameter anchor bolt is required.

SECTION 612
EXTERIOR WINDOWS AND DOORS

612.1 General. This section prescribes performance and construction requirements for exterior window and door installed in wall. Windows and doors shall be installed and flashed in accordance with the fenestration manufacturer's written installation instructions. Window and door openings shall be flashed in accordance with Section 703.8. Written installation instructions shall be provided by the fenestration manufacturer for each window or door.

612.2 Window sills. *Deleted.*

612.3 Window fall prevention devices. Window fall prevention devices and window guards, where provided, shall comply with the requirements of ASTM F 2090.

612.4 Window opening limiting devices. *Where provided*, window opening limiting devices shall comply with the provisions of this section.

612.4.1 General requirements. Window opening limiting devices shall be self acting and shall be positioned to prohibit the free passage of a 4-in. (102-mm) diameter rigid sphere through the window opening when the window opening limiting device is installed in accordance with the manufacturer's instructions.

612.4.2 Operation for emergency escape. Window opening limiting devices shall be designed with release mechanisms to allow for emergency escape through the window opening without the need for keys, tools or special knowledge. Window opening limiting devices shall comply with all of the following:

1. Release of the window opening-limiting device shall require no more than 15 pounds (66 N) of force.

2. The window opening limiting device release mechanism shall operate properly in all types of weather.

3. Window opening limiting devices shall have their release mechanisms clearly identified for proper use in an emergency.

4. The window opening limiting device shall not reduce the minimum net clear opening area of the window unit below what is required by Section 310.1.1 of the code.

612.5 Performance. Exterior windows and doors shall be designed to resist the design wind loads specified in Table 301.2(2) adjusted for height and exposure per Table 301.2(3).

612.6 Testing and labeling. Exterior windows and sliding doors shall be tested by an approved independent laboratory, and bear a label identifying manufacturer, performance characteristics and approved inspection agency to indicate compliance with AAMA/WDMA/CSA 101/I.S.2/A440. Exterior side-hinged doors shall be tested and labeled as conforming to AAMA/ WDMA/CSA 101/I.S.2/A440 or comply with Section 612.8.

Exception: Decorative glazed openings.

612.6.1 Comparative analysis. Structural wind load design pressures for window and door units smaller than the size tested in accordance with Section 612.6 shall be permitted to be higher than the design value of the tested unit provided such higher pressures are determined by accepted engineering

analysis. All components of the small unit shall be the same as those of the tested unit. Where such calculated design pressures are used, they shall be validated by an additional test of the window or door unit having the highest allowable design pressure.

612.7 Vehicular access doors. Vehicular access doors shall be tested in accordance with either ASTM E 330 or ANSI/ DASMA 108, and shall meet the acceptance criteria of ANSI/DASMA 108.

612.8 Other exterior window and door assemblies. Exterior windows and door assemblies not included within the scope of Section 612.6 or Section 612.7 shall be tested in accordance with ASTM E 330. Glass in assemblies covered by this exception shall comply with Section 308.5.

FIGURE 612.8(1)

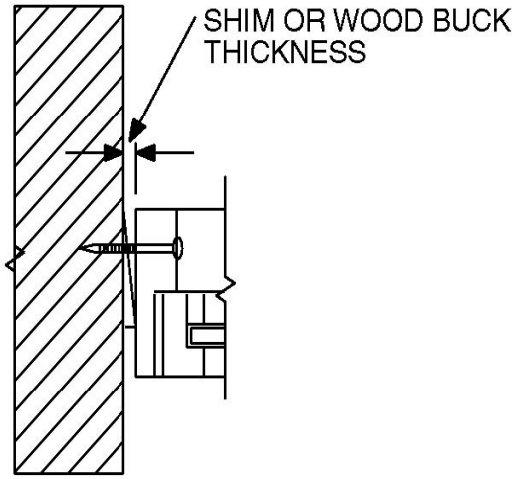

THROUGH THE FRAME

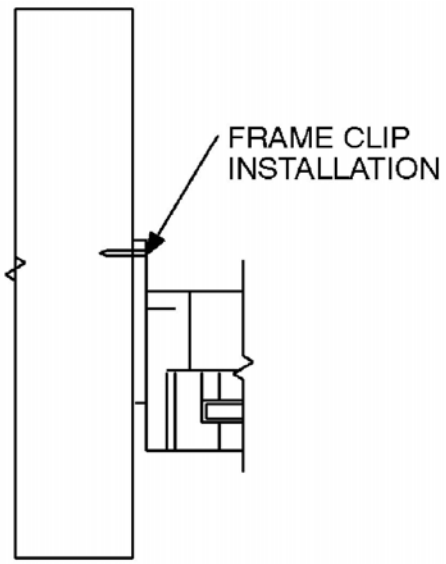

APPLY FRAME CLIP TO WINDOW OR DOOR IN ACCORDANCE WITH PUBLISHED MANUFACTURER'S RECOMMENDATIONS.

FIGURE 612.8(2)
FRAME CLIP

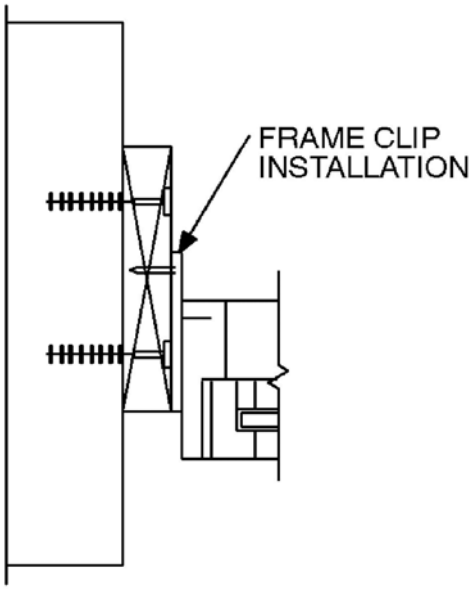

APPLY FRAME CLIP TO WINDOW OR DOOR FRAME IN ACCORDANCE WITH PUBLISHED MANUFACTURER'S RECOMMENDATIONS. ANCHORS SHALL BE PROVIDED TO TRANSFER LOAD FROM THE FRAME CLIP INTO THE ROUGH OPENING SUBSTRATE.

FIGURE 612.8(4)
FRAME CLIP

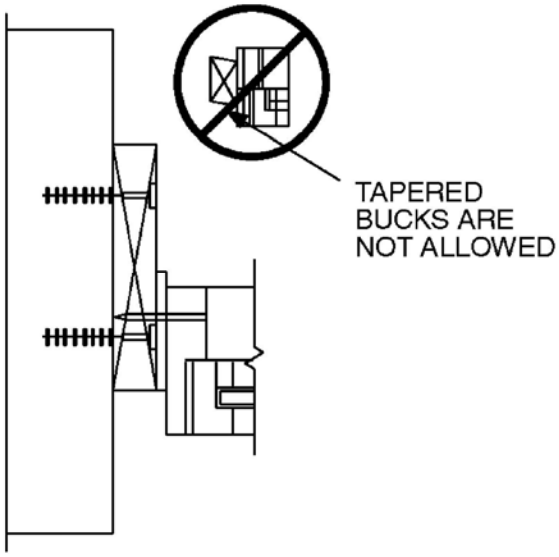

THROUGH THE FRAME ANCHORING METHOD. ANCHORS SHALL BE PROVIDED TO TRANSFER LOAD FROM THE WINDOW OR DOOR FRAME INTO THE ROUGH OPENING SUBSTRATE.

FIGURE 612.8(3)
THROUGH THE FRAME

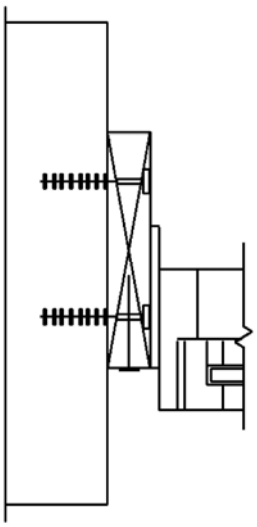

APPLY ANCHORS THROUGH FLANGE IN ACCORDANCE WITH PUBLISHED MANUFACTURER'S RECOMMENDATIONS.

FIGURE 612.8(5)
THROUGH THE FLANGE

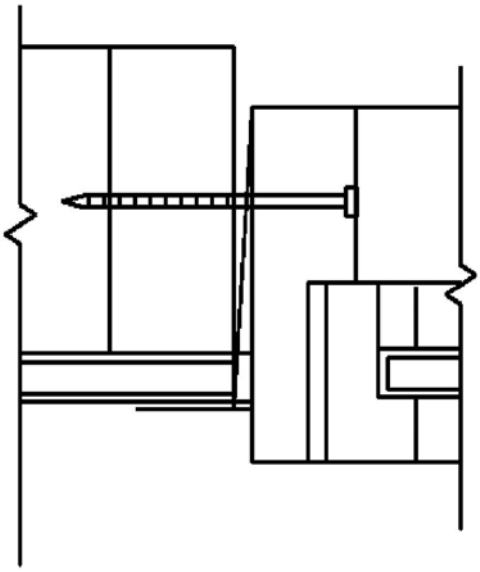

FIGURE 612.8(6)
THROUGH THE FLANGE

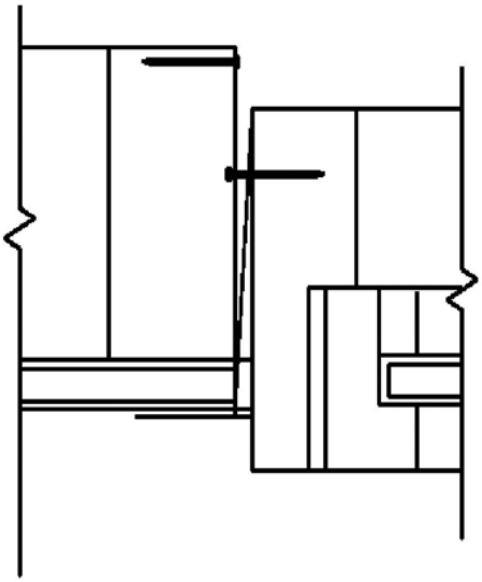

FIGURE 612.8(7)
FRAME CLIP

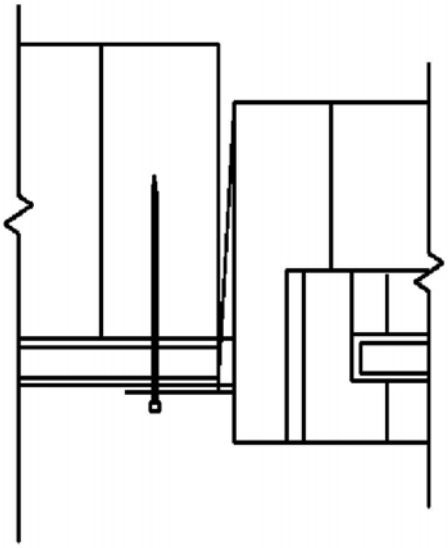

FIGURE 612.8(8)
THROUGH THE FLANGE

612.9 Wind-borne debris protection. Protection of exterior windows and glass doors in buildings located in wind-borne debris regions shall be in accordance with Section 301.2.1.2.

612.9.1 Fenestration testing and labeling. Fenestration shall be tested by an approved independent laboratory, listed by an approved entity, and bear a label identifying manufacturer, performance characteristics, and approved inspection agency to indicate compliance with the requirements of the following specification:

1. ASTM E 1886 and ASTM E 1996; or

2. AAMA 506.

612.10 Anchorage methods. The methods cited in this section apply only to anchorage of window and glass door assemblies to the main force-resisting system.

612.10.1 Anchoring requirements. Window and glass door assemblies shall be anchored in accordance with the published manufacturer's recommendations to achieve the design pressure specified. Substitute anchoring systems used for substrates not specified by the fenestration manufacturer shall provide equal or greater anchoring performance as demonstrated by accepted engineering practice.

612.10.2 Anchorage details. Products shall be anchored in accordance with the minimum requirements illustrated in Figures 612.8(1), 612.8(2), 612.8(3), 612.8(4), 612.8(5), 612.8(6), 612.8(7) and 612.8(8).

612.10.2.1 Masonry, concrete or other structural substrate. Where the wood shim or buck thickness is less than 1½ inches (38 mm), window and glass door assemblies shall be anchored through the jamb, or by jamb clip and anchors shall be embedded directly into the masonry, concrete or other substantial substrate material. Anchors shall adequately transfer load from the window or door frame into the rough opening substrate [see Figures 612.8(1) and 612.8(2).]

Where the wood shim or buck thickness is 1½ inches (38 mm) or more, the buck is securely fastened to the masonry, concrete or other substantial substrate, and the buck extends beyond the interior face of the window or door frame, window and glass door assemblies shall be anchored through the jamb, or by jamb clip, or through the flange to the secured wood buck.

Anchors shall be embedded into the secured wood buck to adequately transfer load from the window or door frame assembly [Figures 612.8(3), 612.8(4) and 612.8(5)].

612.10.2.2 Wood or other approved framing material. Where the framing material is wood or other approved framing material, window and glass door assemblies shall be anchored through the frame, or by frame clip, or through the flange. Anchors shall be embedded into the frame construction to adequately transfer load [Figures 612.8(6), 612.8(7) and 612.8(8)].

612.11 Mullions. Mullions shall be tested by an approved testing laboratory in accordance with AAMA 450, or be engineered in accordance with accepted engineering practice. Mullions tested as stand-alone units or qualified by engineering shall use performance criteria cited in Sections 612.11.1, 612.11.2 and 612.11.3. Mullions qualified by an actual test of an entire assembly shall comply with Sections 612.11.1 and 612.11.3.

612.11.1 Load transfer. Mullions shall be designed to transfer the design pressure loads applied by the window and door assemblies to the rough opening substrate.

612.11.2 Deflection. Mullions shall be capable of resisting the design pressure loads applied by the window and door assemblies to be supported without deflecting more than L/175, where L is the span of the mullion in inches.

612.11.3 Structural safety factor. Mullions shall be capable of resisting a load of 1.5 times the design pressure loads applied by the window and door assemblies to be supported without exceeding the appropriate material stress levels. If tested by an approved laboratory, the 1.5 times the design pressure load shall be sustained for 10 seconds, and the permanent deformation shall not exceed 0.4 percent of the mullion span after the 1.5 times design pressure load is removed.

SECTION 613
STRUCTURAL INSULATED PANEL WALL CONSTRUCTION

613.1 General. Structural insulated panel (SIP) walls shall be designed in accordance with the provisions of this section.

613.2 Applicability limits. The provisions of this section shall control the construction of exterior structural insulated panel walls and interior load-bearing structural insulated panel walls for buildings not greater than 60 feet (18 288 mm) in length perpendicular to the joist or truss span, not greater than 40 feet (12 192 mm) in width parallel to the joist or truss span and not greater than two stories in height with each wall not greater than 10 feet (3048 mm) high. All exterior walls installed in accordance with the provisions of this section shall be considered as load-bearing walls. Structural insulated panel walls constructed in accordance with the provisions of this section shall be limited to sites subjected to a maximum design wind speed of 130 miles per hour (58 m/s), Exposure A, B or C, and a maximum ground snow load of 70 pounds per foot (3.35 kPa), and Seismic Design Categories A, B, and C.

613.3 Materials. SIPs shall comply with the following criteria:

613.3.1 Core. The core material shall be composed of foam plastic insulation meeting one of the following requirements:

1. ASTM C 578 and have a minimum density of 0.90 pounds per cubic feet (14.4 kg/m3); or

2. Polyurethane meeting the physical properties shown in Table 613.3.1, or;

3. An approved alternative *in accordance with section 106.5*.

All cores shall meet the requirements of Section 316.

613.3.2 Facing. Facing materials for SIPs shall be wood structural panels conforming to DOC PS 1 or DOC PS 2, each having a minimum nominal thickness of $^{7}/_{16}$ inch (11 mm) and shall meet the additional minimum properties specified in Table 613.3.2. Facing shall be identified by a grade mark or certificate of inspection issued by an approved agency.

613.3.3 Adhesive. Adhesives used to structurally laminate the foam plastic insulation core material to the structural wood facers shall conform to ASTM D 2559 or approved alternative specifically intended for use as an adhesive used in the lamination of structural insulated panels. Each container of adhesive shall bear a label with the adhesive manufacturer's name, adhesive name and type and the name of the quality assurance agency.

613.3.4 Lumber. The minimum lumber framing material used for SIPs prescribed in this document is NLGA graded No. 2 Spruce-pine-fir. Substitution of other wood species/grades that meet or exceed the mechanical properties and specific gravity of No. 2 Spruce-pine-fir shall be permitted.

TABLE 613.3.1
MINIMUM PROPERTIES FOR POLYURETHANE INSULATION USED AS SIPS CORE

PHYSICAL PROPERTY	POLYURETHANE
Density, core nominal. (ASTM D 1622)	2.2 lb/ft3
Compressive resistance at yield or 10% deformation, whichever occurs first. (ASTM D 1621)	19 psi (perpendicular to rise)
Flexural strength, min. (ASTM C 203)	30 psi
Tensile strength, min. (ASTM D 1623)	35 psi
Shear strength, min. (ASTM C 273)	25 psi
Substrate adhesion, min. (ASTM D 1623)	22 psi
Water vapor permeance of 1.00-in. thickness, max. (ASTM E 96)	2.3 perm
Water absorption by total immersion, max. (ASTM C 272)	4.3% (volume)
Dimensional stability (change in dimensions), max. [ASTM D2126 (7 days at 158°F/100% humidity and 7 days at -20°F)]	2%

For SI: 1 pound per cubic foot = 16.02 kg/m^3, 1 pound per square inch = 6.895 kPa, °C = [(°F) - 32]1.8.

TABLE 613.3.2
MINIMUM PROPERTIES[a] FOR WOOD STRUCTURAL PANEL FACING MATERIAL USED IN SIP WALLS

THICKNESS (inch)	PRODUCT	FLATWISE STIFFNESS[b] (lbf-in2/ft)		FLATWISE STRENGTH[c] (lbf-in/ft)		TENSION[c] (lbf/ft)		DENSITY[b,d] (pcf)
		Along	Across	Along	Across	Along	Across	
$^7/_{16}$	Sheathing	54,700	27,100	950	870	6,800	6,500	35

For SI: 1 inch = 25.4 mm, 1 lbf-in^2/ft = 9.415 x 10^{-6} kPa/m, 1 lbf-in/ft = 3.707 x 10^{-4} kN/m, 1 lbf/ft = 0.0146 N/mm, 1 pound per cubic foot = 16.018 kg/m^3.

a. Values listed in Table 613.3.2 are qualification test values and are not to be used for design purposes.
b. Mean test value shall be in accordance with Section 7.6 of DOC PS 2.
c. Characteristic test value (5th percent with 75% confidence).
d. Density shall be based on oven-dry weight and oven-dry volume.

613.3.5 SIP screws. Screws used for the erection of SIPs as specified in Section 613.5 shall be fabricated from steel, shall be provided by the SIPs manufacturer and shall be sized to penetrate the wood member to which the assembly is being attached by a minimum of 1 inch (25 mm). The screws shall be corrosion resistant and have a minimum shank diameter of 0.188 inch (4.7 mm) and a minimum head diameter of 0.620 inch (15.5 mm).

613.3.6 Nails. Nails specified in Section 613 shall be common or galvanized box unless otherwise stated.

613.4 SIP wall panels. SIPs shall comply with Figure 613.4 and shall have minimum panel thickness in accordance with Tables 613.5(1) and 613.5(2) for above-grade walls. All SIPs shall be identified by grade mark or certificate of inspection issued by an approved agency.

613.4.1 Labeling. All panels shall be identified by grade mark or certificate of inspection issued by an approved agency. Each (SIP) shall bear a stamp or label with the following minimum information:

1. Manufacturer name/logo.

2. Identification of the assembly.

3. Quality assurance agency.

613.5 Wall construction. Exterior walls of SIP construction shall be designed and constructed in accordance with the provisions of this section and Tables 613.5(1) and 613.5(2) and Figures 613.5(1) through 613.5(5). SIP walls shall be fastened to other wood building components in accordance with Tables 602.3(1) through 602.3(4).

Framing shall be attached in accordance with ~~Section~~ Table 602.3(1) unless otherwise provided for in Section 613.

613.5.1 Top plate connection. SIP walls shall be capped with a double top plate installed to provide overlapping at corner, intersections and splines in accordance with Figure 613.5.1. The double top plates shall be made up of a single 2 by top plate having a width equal to the width of the panel core, and shall be recessed into the SIP below. Over this top plate a cap plate shall be placed. The cap plate width shall match the SIP thickness and overlap the facers on both sides of the panel. End joints in top plates shall be offset at least 24 inches (610 mm).

613.5.2 Bottom (sole) plate connection. SIP walls shall have full bearing on a sole plate having a width equal to the nominal width of the foam core. When SIP walls are supported directly on continuous foundations, the wall wood sill plate shall be anchored to the foundation in accordance with Figure 613.5.2 and Section 403.1.

613.5.3 Wall bracing. SIP walls shall be braced in accordance with Section 602.10. SIP walls shall be considered continuous wood structural panel

sheathing for purposes of computing required bracing. SIP walls shall meet the requirements of Section 602.10.4 except that SIPs corners shall be fabricated as shown in Figure 613.9. When SIP walls are used for wall bracing, the SIP bottom plate shall be attached to wood framing below in accordance with Table 602.3(1).

613.6 Interior load-bearing walls. Interior load-bearing walls shall be constructed as specified for exterior walls.

613.7 Drilling and notching. The maximum vertical chase penetration in SIPs shall have a maximum side dimension of 2 inches (51 mm) centered in the panel core. Vertical chases shall have a minimum spacing of 24-inches (610 mm) on center. Maximum of two horizontal chases shall be permitted in each wall panel, one at 14 inches (360 mm) from the bottom of the panel and one at mid-height of the wall panel. The maximum allowable penetration size in a wall panel shall be circular or rectangular with a maximum dimension of 12 inches (305 mm). Overcutting of holes in facing panels shall not be permitted.

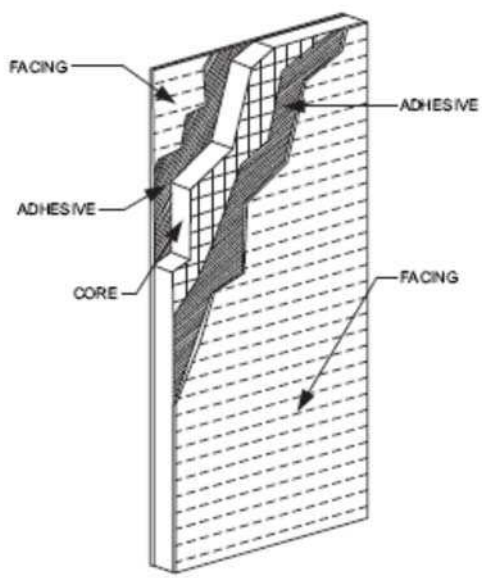

FIGURE 613.4
SIP WALL PANEL

TABLE 613.5(1)
MINIMUM THICKNESS FOR SIP WALL SUPPORTING SIP LIGHT-FRAME ROOF ONLY (inches)

WIND SPEED (3-second gust)		SNOW LOAD (psf)	BUILDING WIDTH (feet)														
			24			28			32			36			40		
Exp. A/B	Exp. C		Wall Height (ft)			Wall Height (ft)			Wall Height (ft)			Wall Height (ft)			Wall Height (ft)		
			8	9	10	8	9	10	8	9	10	8	9	10	8	9	10
85	—	20	4.5	4.5	4.5	4.5	4.5	4.5	4.5	4.5	4.5	4.5	4.5	4.5	4.5	4.5	4.5
		30	4.5	4.5	4.5	4.5	4.5	4.5	4.5	4.5	4.5	4.5	4.5	4.5	4.5	4.5	4.5
		50	4.5	4.5	4.5	4.5	4.5	4.5	4.5	4.5	4.5	4.5	4.5	4.5	4.5	4.5	4.5
		70	4.5	4.5	4.5	4.5	4.5	4.5	4.5	4.5	4.5	4.5	4.5	4.5	4.5	4.5	4.5
100	85	20	4.5	4.5	4.5	4.5	4.5	4.5	4.5	4.5	4.5	4.5	4.5	4.5	4.5	4.5	4.5
		30	4.5	4.5	4.5	4.5	4.5	4.5	4.5	4.5	4.5	4.5	4.5	4.5	4.5	4.5	4.5
		50	4.5	4.5	4.5	4.5	4.5	4.5	4.5	4.5	4.5	4.5	4.5	4.5	4.5	4.5	4.5
		70	4.5	4.5	4.5	4.5	4.5	4.5	4.5	4.5	4.5	4.5	4.5	4.5	4.5	4.5	4.5
110	100	20	4.5	4.5	4.5	4.5	4.5	4.5	4.5	4.5	4.5	4.5	4.5	4.5	4.5	4.5	4.5
		30	4.5	4.5	4.5	4.5	4.5	4.5	4.5	4.5	4.5	4.5	4.5	4.5	4.5	4.5	4.5
		50	4.5	4.5	4.5	4.5	4.5	4.5	4.5	4.5	4.5	4.5	4.5	4.5	4.5	4.5	4.5
		70	4.5	4.5	4.5	4.5	4.5	4.5	4.5	4.5	4.5	4.5	4.5	4.5	4.5	4.5	4.5
120	110	20	4.5	4.5	4.5	4.5	4.5	4.5	4.5	4.5	4.5	4.5	4.5	4.5	4.5	4.5	4.5
		30	4.5	4.5	4.5	4.5	4.5	4.5	4.5	4.5	4.5	4.5	4.5	4.5	4.5	4.5	4.5
		50	4.5	4.5	4.5	4.5	4.5	4.5	4.5	4.5	4.5	4.5	4.5	4.5	4.5	4.5	4.5
		70	4.5	4.5	4.5	4.5	4.5	4.5	4.5	4.5	4.5	4.5	4.5	6.5	4.5	4.5	6.5
130	120	20	4.5	4.5	4.5	4.5	4.5	4.5	4.5	4.5	4.5	4.5	4.5	4.5	4.5	4.5	4.5
		30	4.5	4.5	4.5	4.5	4.5	4.5	4.5	4.5	4.5	4.5	4.5	4.5	4.5	4.5	4.5
		50	4.5	4.5	4.5	4.5	4.5	4.5	4.5	4.5	6.5	4.5	4.5	6.5	4.5	4.5	6.5
		70	4.5	4.5	4.5	4.5	4.5	6.5	4.5	4.5	6.5	4.5	6.5	N/A	4.5	6.5	N/A
—	130	20	4.5	4.5	6.5	4.5	4.5	N/A	4.5	4.5	N/A	4.5	4.5	N/A	4.5	6.5	N/A
		30	4.5	4.5	N/A	4.5	4.5	N/A	4.5	4.5	N/A	4.5	6.5	N/A	4.5	6.5	N/A
		50	4.5	6.5	N/A	4.5	6.5	N/A	4.5	N/A	N/A	6.5	N/A	N/A	6.5	N/A	N/A
		70	4.5	N/A	N/A	6.5	N/A	N/A	6.5	N/A	N/A	N/A	N/A	N/A	N/A	N/A	N/A

For SI: 1 inch = 25.4 mm; 1 foot = 304.8 mm; 1 pound per square foot = 0.0479kPa.
Maximum deflection criterion: *L*/240.
Maximum roof dead load: 10 psf.
Maximum roof live load: 70 psf.
Maximum ceiling dead load: 5 psf.
Maximum ceiling live load: 20 psf.
Wind loads based on Table 301.2 (2).
N/A indicates not applicable.

TABLE 613.5(2)
MINIMUM THICKNESS FOR SIP WALLS SUPPORTING SIP OR LIGHT-FRAME ONE STORY AND ROOF (inches)

WIND SPEED (3-second gust)		SNOW LOAD (psf)	BUILDING WIDTH (feet)														
			24			28			32			36			40		
Exp. A/B	Exp. C		Wall Height (feet)			Wall Height (feet)			Wall Height (feet)			Wall Height (feet)			Wall Height (feet)		
			8	9	10	8	9	10	8	9	10	8	9	10	8	9	10
85	—	20	4.5	4.5	4.5	4.5	4.5	4.5	4.5	4.5	4.5	4.5	4.5	4.5	4.5	4.5	4.5
		30	4.5	4.5	4.5	4.5	4.5	4.5	4.5	4.5	4.5	4.5	4.5	4.5	4.5	4.5	4.5
		50	4.5	4.5	4.5	4.5	4.5	4.5	4.5	4.5	4.5	4.5	4.5	4.5	4.5	4.5	4.5
		70	4.5	4.5	4.5	4.5	4.5	4.5	4.5	4.5	4.5	4.5	4.5	6.5	6.5	6.5	6.5
100	85	20	4.5	4.5	4.5	4.5	4.5	4.5	4.5	4.5	4.5	4.5	4.5	4.5	4.5	4.5	4.5
		30	4.5	4.5	4.5	4.5	4.5	4.5	4.5	4.5	4.5	4.5	4.5	4.5	4.5	4.5	6.5
		50	4.5	4.5	4.5	4.5	4.5	4.5	4.5	4.5	4.5	4.5	4.5	6.5	4.5	6.5	6.5
		70	4.5	4.5	4.5	4.5	4.5	4.5	4.5	4.5	6.5	6.5	6.5	6.5	6.5	N/A	N/A
110	100	20	4.5	4.5	4.5	4.5	4.5	4.5	4.5	4.5	4.5	4.5	4.5	4.5	4.5	4.5	6.5
		30	4.5	4.5	4.5	4.5	4.5	4.5	4.5	4.5	4.5	4.5	4.5	6.5	4.5	6.5	6.5
		50	4.5	4.5	4.5	4.5	4.5	4.5	4.5	4.5	6.5	4.5	6.5	6.5	6.5	6.5	N/A
		70	4.5	4.5	4.5	4.5	4.5	6.5	6.5	6.5	N/A	6.5	N/A	N/A	N/A	N/A	N/A
120	110	20	4.5	4.5	4.5	4.5	4.5	4.5	4.5	4.5	6.5	4.5	4.5	6.5	4.5	6.5	N/A
		30	4.5	4.5	4.5	4.5	4.5	6.5	4.5	4.5	6.5	4.5	6.5	N/A	6.5	6.5	N/A
		50	4.5	4.5	6.5	4.5	4.5	6.5	4.5	6.5	N/A	6.5	N/A	N/A	N/A	N/A	N/A
		70	4.5	4.5	6.5	4.5	6.5	N/A	6.5	N/A	N/A	N/A	N/A	N/A	N/A	N/A	N/A
130	120	20	4.5	4.5	6.5	4.5	4.5	6.5	4.5	6.5	N/A	4.5	6.5	N/A	6.5	N/A	N/A
		30	4.5	4.5	6.5	4.5	4.5	N/A	4.5	6.5	N/A	6.5	N/A	N/A	6.5	N/A	N/A
		50	4.5	6.5	N/A	4.5	6.5	N/A	6.5	N/A	N/A	N/A	N/A	N/A	N/A	N/A	N/A
		70	4.5	6.5	N/A	6.5	N/A	N/A	N/A	N/A	N/A	N/A	N/A	N/A	N/A	N/A	N/A
—	130	20	6.5	N/A	N/A	6.5	N/A	N/A	N/A	N/A	N/A	N/A	N/A	N/A	N/A	N/A	N/A
		30	6.5	N/A	N/A	N/A	N/A	N/A	N/A	N/A	N/A	N/A	N/A	N/A	N/A	N/A	N/A
		50	N/A	N/A	N/A	N/A	N/A	N/A	N/A	N/A	N/A	N/A	N/A	N/A	N/A	N/A	N/A
		70	N/A	N/A	N/A	N/A	N/A	N/A	N/A	N/A	N/A	N/A	N/A	N/A	N/A	N/A	N/A

For SI: 1 inch = 25.4 mm; 1 foot = 304.8 mm; 1 pound per square foot = 0.0479kPa.
Maximum deflection criterion: *L*/240.
Maximum roof dead load: 10 psf.
Maximum roof live load: 70 psf.
Maximum ceiling dead load: 5 psf.
Maximum ceiling live load: 20 psf.
Maximum second floor live load: 30 psf.
Maximum second floor dead load: 10 psf.
Maximum second floor dead load from walls: 10 psf.
Maximum first floor live load: 40 psf.
Maximum first floor dead load: 10 psf.
Wind loads based on Table 301.2 (2).
N/A indicates not applicable.

613.8 Connection. SIPs shall be connected at vertical in-plane joints in accordance with Figure 613.8 or by other approved methods.

613.9 Corner framing. Corner framing of SIP walls shall be constructed in accordance with Figure 613.9.

613.10 Headers. SIP headers shall be designed and constructed in accordance with Table 613.10 and Figure 613.5.1. SIPs headers shall be continuous sections without splines. Headers shall be at least 11 $^{7}/_{8}$ inches (302mm) deep. Headers longer than 4 feet (1219mm) shall be constructed in accordance with Section 602.7.

613.10.1 Wood structural panel box headers. Wood structural panel box headers shall be allowed where SIP headers are not applicable. Wood structural panel box headers shall be constructed in accordance with Figure 602.7.2 and Table 602.7.2.

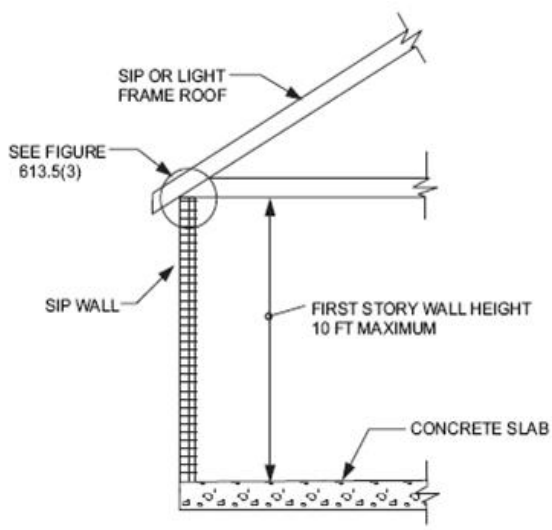

For SI: 1 foot = 304.8 mm.

FIGURE 613.5(1)
MAXIMUM ALLOWABLE HEIGHT OF SIP WALLS

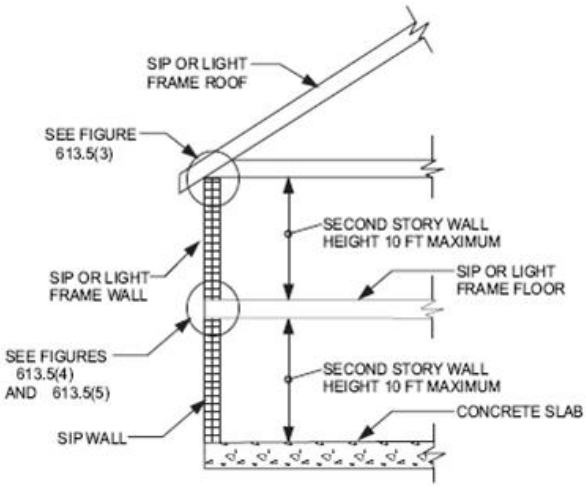

For SI: 1 foot = 304.8 mm.

FIGURE 613.5(2)
MAXIMUM ALLOWABLE HEIGHT OF SIP WALLS

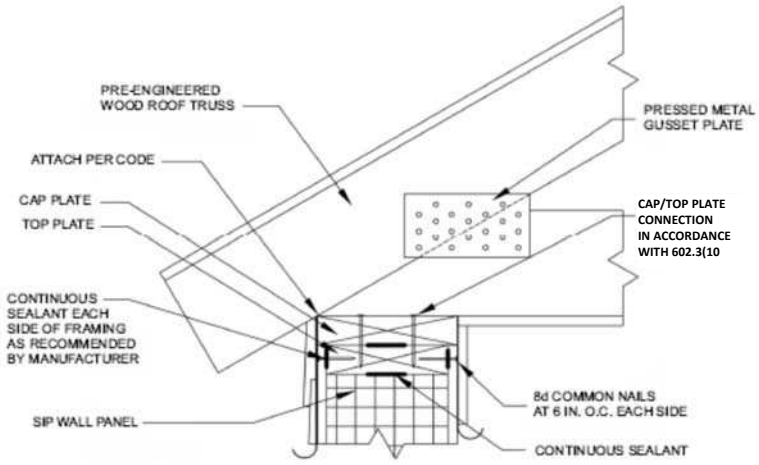

For SI: 1 inch = 25.4 mm.

FIGURE 613.5(3)
TRUSSED ROOF TO TOP PLATE CONNECTION

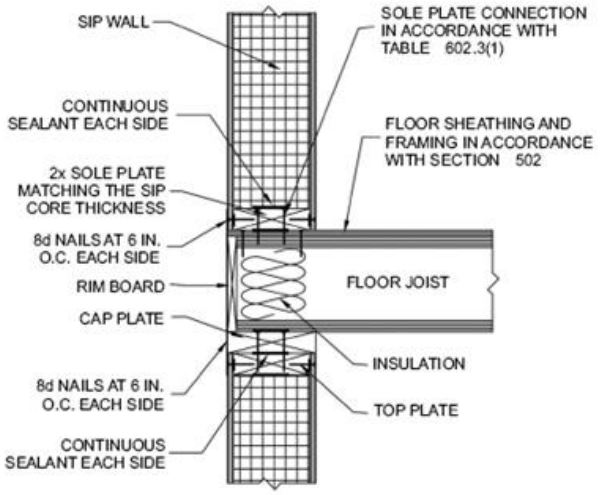

For SI: 1 inch = 25.4 mm.
Note: Figures illustrate SIP-specific attachment requirements. Other connections shall be made in accordance with Table 602.3(1) and (2) as appropriate.

FIGURE 613.5(4)
SIP WALL TO WALL PLATFORM FRAME CONNECTION

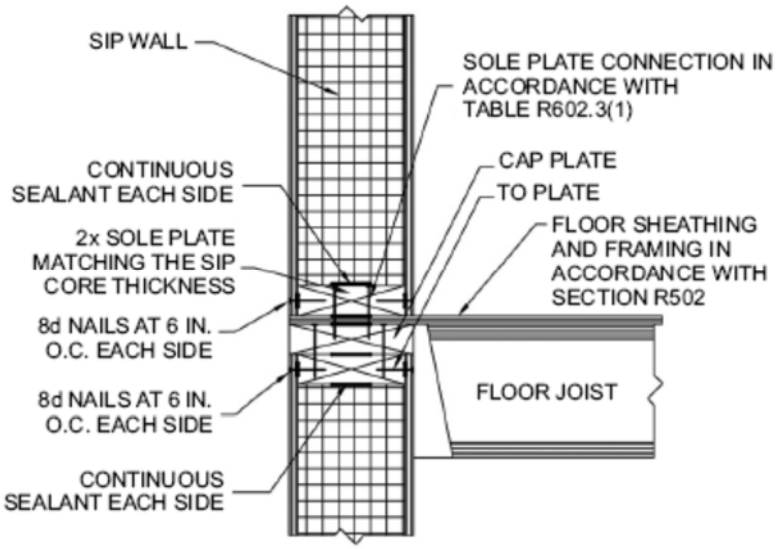

For SI: 1 inch = 25.4 mm.
Note: Figures illustrate SIP-specific attachment requirements. Other connections shall be made in accordance with Tables 602.3(1) and (2), as appropriate.

FIGURE 613.5(5)
SIP WALL TO WALL BALLOON FRAME CONNECTION
(I-Joist floor shown for Illustration only)

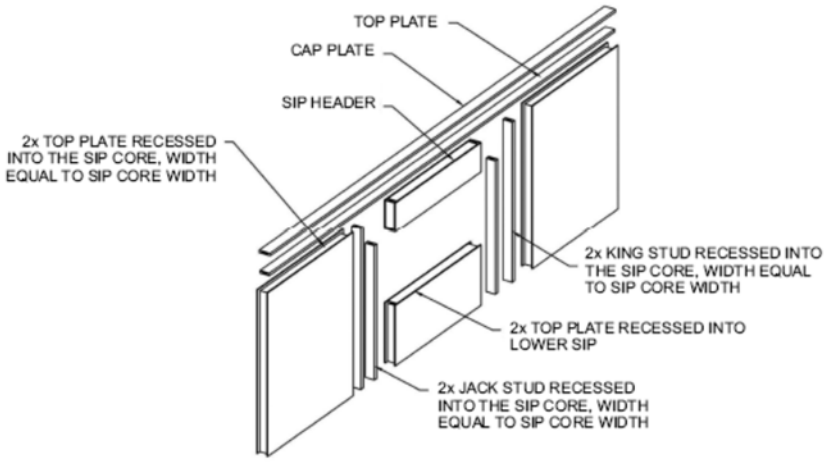

For SI: 1 inch = 25.4 mm.

Notes:

1. Top plates shall be continuous over header.
2. Lower 2x top plate shall have a width equal to the SIP core width and shall be recessed into the top edge of the panel. Cap plate shall be placed over the recessed top plate and shall have a width equal to the SIPs width.
3. SIP facing surfaces shall be nailed to framing and cripples with 8d common or galvanized box nails spaced 6 inches on center.
4. Galvanized nails shall be hot-dipped or tumbled. Framing shall be attached in accordance to Section 602.3(1) unless otherwise provide for in Section 613.

FIGURE R613.5.1
SIP WALL FRAMING CONFIGURATION

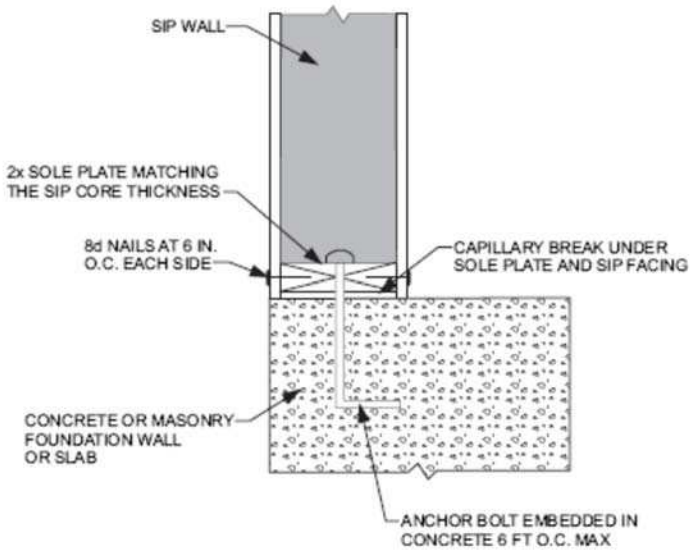

For SI: 1 inch = 25.4 mm, 1 foot = 304.8 mm.

FIGURE 613.5.2
SIP WALL TO CONCRETE SLAB FOR FOUNDATION WALL ATTACHMENT

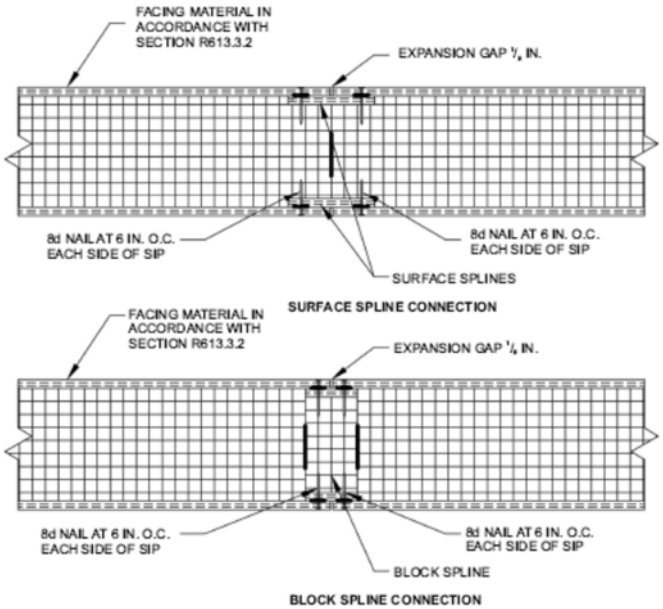

For SI: 1 inch = 25.4 mm.

FIGURE 613.8
TYPICAL SIP CONNECTION DETAILS FOR VERTICAL IN-PLANE JOINTS

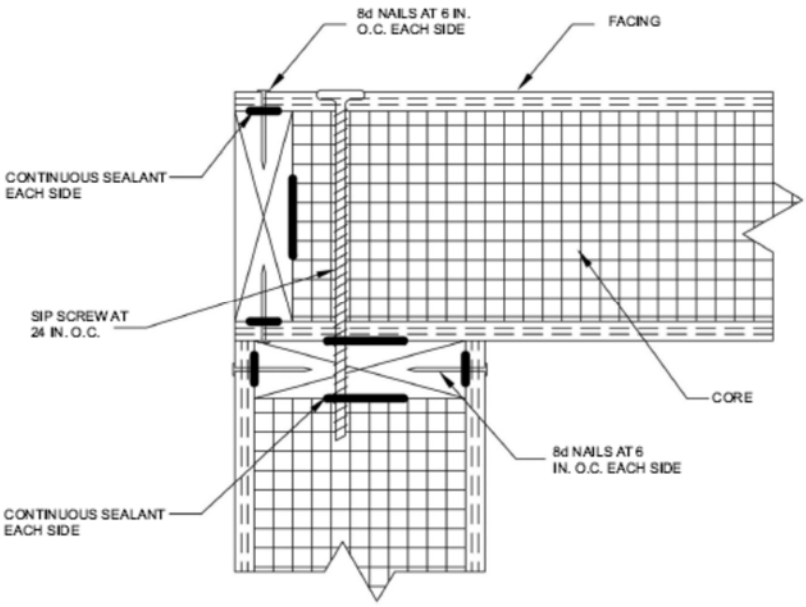

For SI: 1 inch = 25.4 mm.

FIGURE 613.9
SIP CORNER FRAMING DETAIL

TABLE 613.10
MAXIMUM SPANS FOR $11^{7}/_{8}$ INCH DEEP SIP HEADERS (feet)

LOAD CONDITION	SNOW LOAD (psf)	BUILDING WIDTH (feet)				
		24	28	32	36	40
Supporting roof only	20	4	4	4	4	2
	30	4	4	4	2	2
	50	2	2	2	2	2
	70	2	2	2	N/A	N/A
Supporting roof and one-story	20	2	2	N/A	N/A	N/A
	30	2	2	N/A	N/A	N/A
	50	2	N/A	N/A	N/A	N/A
	70	N/A	N/A	N/A	N/A	N/A

For SI: 1 inch = 25.4 mm, 1 foot = 304.8 mm.
Maximum deflection criterion: *L*/360.
Maximum roof dead load: 10 psf.
Maximum ceiling load: 5 psf.
Maximum second floor live load: 30 psf.
Maximum second floor dead load: 10 psf.
Maximum second floor dead load from walls: 10 psf.
N/A indicates not applicable.

Effective:	1/1/2018
Five Year Review (FYR) Dates:	1/1/2018

CERTIFIED ELECTRONICALLY

Certification

12/22/2017

Date

Promulgated Under:	119.03
Statutory Authority:	3781.10(A)
Rule Amplifies:	3781.01, 3781.06, 3781.10, 3781.11, 3791.04, 4740.14
Prior Effective Dates:	5/27/06, 1/1/13, 7/1/14

4101:8-44-01 Referenced standards.

SECTION 4401
REFERENCED STANDARDS

4401.1 General. *This chapter lists the standards that are referenced in various sections of this code. The standards are listed herein by the promulgating agency of the standard, the standard identification, the effective date and title. The application of the referenced standards shall be as specified in Section 102.5.*

4401.2 Referenced codes. *When indicated in this code, the following codes refer to provisions in the listed chapters of the administrative code:*

Referenced Code	***Ohio Administrative Code Chapters***
Ohio Building Code *Fire Code* *Mechanical Code* *Plumbing Code*	*4101:1-1 to 4101:1-35* *1301:7-1 to 1301:7-7* *4101:2-1 to 4101:2-15* *4101:3-1 to 4101:3-13, codified and published as the 2011 Ohio Plumbing Code, effective 11-1-2011 (including update effective ~~07-01-2014~~ 10-10-2016), and as modified in Section 2501.1.1.*

4401.3 Referenced standard list.

American Architectural Manufacturers Association
1827 Walden Office Square, Suite 550
Schaumburg, IL 60173

AAMA Standard reference number	**Title**

AAMA/WDMA/CSA

101/I.S.2/A440—08	North American Fenestration Standard/Specification for Windows, Doors, and Skylights
450—*10*	Voluntary Performance Rating Method for Mulled Fenestration Assemblies
506—*08*	Voluntary Specifications for Hurricane Impact and Cycle Testing of Fenestration Products
711—07	Voluntary Specification for Self Adhering Flashing Used for Installation of Exterior Wall Fenestration Products.

Air Conditioning Contractors of America
2800 Shirlington Road, Suite 300
Arlington, VA 22206

ACCA

Standard reference number	**Title**
Manual D—*09*	Residential Duct Systems
Manual J— *04*	Residential Load Calculation—Eighth Edition
Manual S—04	Residential Equipment Selection

American Concrete Institute
38800 Country Club Drive
Farmington Hills, MI 48331

ACE

Standard reference number	**Title**
318—08	Building Code Requirements for Structural Concrete
332—08	Code Requirements for Residential Concrete Construction
530—08	Building Code Requirements for Masonry Structures
530.1—08	Specification for Masonry Structures

American Forest and Paper Association
1111 19th Street, NW, Suite 800
Washington, DC 20036

American Forest Products Association (Currently the American Wood Council)
803 Sycolin Road, Suite 201
Leesburg, VA 20175
http://www.awc.org/index.html

AFPA Standard reference number	**Title**
NDS—05	National Design Specification (NDS) for Wood Construction—with 2005 Supplement
WFCM-01	Wood Frame Construction Manual for One- and Two-family Dwellings
AFPA—93	Span Tables for Joists and Rafters
PWF—07	Permanent Wood Foundation Design Specification

American Iron and Steel Institute
1140 Connecticut Ave, Suite 705
Washington, DC 20036

AISI Standard reference number	**Title**
AISI S100—07	North American Specification for the Design of Cold-formed Steel Structural Members
AISI S230—07	Standard for Cold-formed Steel Framing-prescriptive Method for One- and Two-family Dwellings

American Institute of Timber Construction
7012 S. Revere Parkway, Suite 140
Centennial, CO 80112

AITC Standard reference number	**Title**
ANSI/AITC A 190.1—07	Structural Glued Laminated Timber

American National Standards Institute
25 West 43rd Street, Fourth Floor
New York, NY 10036

ANSI Standard reference number	**Title**
A108.1A—*09*	Installation of Ceramic Tile in the Wet-set Method, with Portland Cement Mortar
A108.1B—*09*	Installation of Ceramic Tile, Quarry Tile on a Cured Portland Cement Mortar Setting Bed with Dry-set or Latex-Portland Mortar
A108.4—*09*	Installation of Ceramic Tile with Organic Adhesives or Water Cleanable Tile-setting Epoxy Adhesive
A108.5—*09*	Installation of Ceramic Tile with Dry-set Portland Cement Mortar or Latex-Portland Cement Mortar
A108.6—*09*	Installation of Ceramic Tile with Chemical-resistant, Water-cleanable Tile-setting and -grouting Epoxy
A108.11—*09*	Interior Installation of Cementitious Backer Units
A118.1—*10.1*	American National Standard Specifications for Dry-set Portland Cement Mortar
A118.3—*10.1*	American National Standard Specifications for Chemical-resistant, Water-cleanable Tile-setting and Grouting Epoxy and Water-cleanable Tile-setting Epoxy Adhesive
A118.10—*10.1*	Specification for Load Bearing, Bonded, Waterproof Membranes for Thin-set Ceramic Tile and Dimension Stone Installation
A136.1—*10.1*	American National Standard Specifications for Organic Adhesives for Installation of Ceramic Tile
A137.1—*08*	American National Standard Specifications for Ceramic Tile
A208.1—*09*	Particleboard
LC1—*05*	Interior Fuel Gas Piping Systems Using Corrugated Stainless Steel Tubing
LC4—07	Press-connect Copper and Copper Alloy Fittings for use in Fuel Gas Distribution Systems
Z21.1—*05*	Household Cooking Gas Appliances

Z21.5.1—*06*	Gas Clothes Dryers—Volume I—Type I Clothes Dryers
Z21.8—94 (R2002)	Installation of Domestic Gas Conversion Burners
Z21.10.1—*09*	Gas Water Heaters—Volume I—Storage Water Heaters with Input Ratings of 75,000 Btu per hour or Less
Z21.10.3—*07*	Gas Water Heaters—Volume III—Storage Water Heaters with Input Ratings above 75,000 Btu per hour, Circulating and Instantaneous Water Heaters
Z21.11.2—*07*	Gas-fired Room Heaters—Volume II—Unvented Room Heaters
Z21.13—*10*	Gas-fired Low-Pressure Steam and Hot Water Boilers
Z21.15- *09*	Manually Operated Gas Valves for Appliances, Appliance Connector Valves and Hose End Valves
Z21.24- *06*	Connectors for Gas Appliances
Z21.40.1—96 (R2002)	Gas-fired, Heat-activated Air Conditioning and Heat Pump Appliances— with Z21.40.1a-97 (R2002)
Z21.40.2—96 (R2002)	Gas-fired, Work-activated Air Conditioning and Heat Pump Appliances (Internal Combustion) — with Z21.40.2a-1997 (R2002)
Z21.42—*04*	Gas-fired Illuminating Appliances
Z21.47—*06*	Gas-fired Central Furnaces
Z21.50—*07*	Vented Gas Fireplaces
Z21.56—*06*	Gas-fired Pool Heaters
Z21.58—*08*	Outdoor Cooking Gas Appliances
Z21.60—03	Decorative Gas Appliances for Installation in Solid Fuel Burning Fireplaces—with Addenda Z21.60a-2003
Z21.75/CSA6.27—*07*	Connectors for Outdoor Gas Appliances
Z21.80—*03*	Line Pressure Regulators
Z21.83—98	Fuel Cell Power Plants.
Z21.84—02	Manually Listed, Natural Gas Decorative Gas Appliances for Installation in Solid Fuel-burning Fireplaces—with Addenda Z21.84a -2003
Z21.86—*08*	Gas-fired Vented Space Heating Appliances
Z21.88—*09*	Vented Gas Fireplace Heaters
Z21.91—*07*	Ventless Firebox Enclosures for Gas-fired Unvented Decorative Room Heaters
Z83.6—90 (R1998)	Gas-fired Infrared Heaters

Z83.8—*09*	Gas-fired Unit Heaters and Gas-fired Duct Furnaces
Z97.1—*09*	Safety Glazing Materials Used in Buildings—Safety Performance Specifications and Methods of Test

APA–The Engineered Wood Association
7011 South 19th
Tacoma, WA 98466

APA Standard reference number	**Title**
APA E30—*07*	Engineered Wood Construction Guide

American Society of Civil Engineers Structural Engineering Institute
1801 Alexander Bell Drive
Reston, VA 20191

ASCE/SEI Standard reference number	**Title**
5—08	Building Code Requirements for Masonry Structures
6—08	Specification for Masonry Structures
7—05	Minimum Design Loads for Buildings and Other Structures
24—05	Flood-resistant Design and Construction.
32—01	Design and Construction of Frost-protected Shallow Foundations

American Society of Heating, Refrigerating and Air-Conditioning Engineers, Inc.
1791 Tullie Circle, NE
Atlanta, GA 30329

ASHRAE Standard reference number	**Title**
34—*10*	Designation and Safety Classification of Refrigerants
ASHRAE—*09*	ASHRAE Fundamentals Handbook—*2009*

American Society of Mechanical Engineers
Three Park Avenue
New York, NY 10016-5990

ASME Standard reference number	**Title**
A17.1/CSA B44—*2010*	Safety Code for Elevators and Escalators
A18.1—*2008*	Safety Standard for Platforms and Stairway Chair Lifts
B1.20.1—1983 (R2006)	Pipe Threads, General Purpose (Inch)
B16.33—2002 (R*2007*)	Manually Operated Metallic Gas Valves for Use in Gas Piping Systems up to 125 psig (Sizes ½ through 2)
B16.44—02	Manually Operated Metallic Gas Valves For Use in Above-ground Piping Systems up to 5 psi.
B36.10M—2004	Welded and Seamless Wrought-steel Pipe
BPVC—*2010*	ASME Boiler and Pressure Vessel Code
CSD-1—*09*	Controls and Safety Devices for Automatically Fired Boilers

American Society of Sanitary Engineering
901 Canterbury, Suite A
Westlake, OH 44145

ASTM International
100 Barr Harbor Drive
West Conshohocken, PA 19428

ASTM Standard reference number	**Title**
A 36/A 36M—*08*	Specification for Carbon Structural Steel
A 53/A 53M—*10a*	Specification for Pipe, Steel, Black and Hot-dipped, Zinc-coated Welded and Seamless

A 82/A 82M—*07*	Specification for Steel Wire, Plain, for Concrete Reinforcement
A 106/A 106M—*10*	Specification for Seamless Carbon Steel Pipe for High Temperature Service
A 153/A 153M—*09*	Specification for Zinc Coating (Hot Dip) on Iron and Steel Hardware
A 167—*09*	Specification for Stainless and Heat-resisting Chromium-nickel Steel Plate, Sheet and Strip
A 240/A 240M—*10a*	Standard Specification for Chromium and Chromium-nickel Stainless Steel Plate, Sheet and Strip for Pressure Vessels and for General Applications
A 254—97*07*	Specification for Copper Brazed Steel Tubing
A 307—*07b*	Specification for Carbon Steel Bolts and Studs, 6000 psi Tensile Strength
A 463/A 463M—*09a*	Standard Specification for Steel Sheet, Aluminum-coated by the Hot-dip Process.
A 510—*08*	Specification for General Requirements for Wire Rods and Coarse Round Wire, Carbon Steel
A 539—99	Specification for Electric-resistance-welded Coiled Steel Tubing for Gas and Fuel Oil Lines
A 615/A 615M—*09b*	Specification for Deformed and Plain Billet-steel Bars for Concrete Reinforcement
A 641/A 641M—*09b*	Specification for Zinc-coated (Galvanized) Carbon Steel Wire
A 653/A 653M—*09a*	Specification for Steel Sheet, Zinc-coated (Galvanized) or Zinc-iron Alloy-coated (Galvanized) by the Hot-dip Process
A 706/A 706/M—*09b*	Specification for Low-alloy Steel Deformed and Plain Bars for Concrete Reinforcement
A 755/A 755M—*03 (2008)*	Specification for Steel Sheet, Metallic Coated by the Hot-dip Process and Prepainted by the Coil-coating Process for Exterior Exposed Building Products
A 778—01 *(2009)e1*	Specification for Welded Unannealed Austenitic Stainless Steel Tubular Products
A 792/A 792M—*09a*	Specification for Steel Sheet, 55% Aluminum-zinc Alloy-coated by the Hot-dip Process
A 875/A 875M—*09a*	Specification for Steel Sheet, Zinc-5%, Aluminum Alloy-coated by the Hot-dip Process

A 924/A 924M—*10*	Standard Specification for General Requirements for Steel Sheet, Metallic-coated by the Hot-Dip Process
A 951—06	Specification for Steel Wire Masonry Joint Reinforcement
A 996/A 996M—*09b*	Specifications for Rail-steel and Axel-steel Deformed Bars for Concrete Reinforcement
A 1003/A 1003M—*10*	Standard Specification for Steel Sheet, Carbon, Metallic and Nonmetallic-coated for Cold-formed Framing Members
B 42—*10*	Specification for Seamless Copper Pipe, Standard Sizes
B 43—*09*	Specification for Seamless Red Brass Pipe, Standard Sizes
B 75—02	Specification for Seamless Copper Tube
B 88—*09*	Specification for Seamless Copper Water Tube
B 101—*07*	Specification for Lead-coated Copper Sheet and Strip for Building Construction.
B 135—*10*	Specification for Seamless Brass Tube
B 209—*07*	Specification for Aluminum and Aluminum-alloy Sheet and Plate
B 227—*10*	Specification for Hard-drawn Copper-clad Steel Wire
B 251—*10*	Specification for General Requirements for Wrought Seamless Copper and Copper-alloy Tube
B 302—*07*	Specification for Threadless Copper Pipe, Standard Sizes
B 306—*09*	Specification for Copper Drainage Tube (DWV)
B 370—*09*	Specification for Copper Sheet and Strip for Building Construction
B 447—07	Specification for Welded Copper Tube
B 695—04 *(2009)*	Standard Specification for Coatings of Zinc Mechanically Deposited on Iron and Steel
B 813—*10*	Specification for Liquid and Paste Fluxes for Soldering Applications of Copper and Copper Alloy Tube
C 5—*10*	Specification for Quicklime for Structural Purposes
C 27—98 (*2008*)	Specification for Standard Classification of Fireclay and High-alumina Refractory Brick
C 28/C 28M—*10*	Specification for Gypsum Plasters
C 33—*08*	Specification for Concrete Aggregates

C 34—*08*	Specification for Structural Clay Load-bearing Wall Tile C 35—01(2005) Specification for Inorganic Aggregates for Use in Gypsum Plaster
C 36/C 36M—03	Specification for Gypsum Wallboard
C 37/C 37M—01	Specification for Gypsum Lath
C 55—*09*	Specification for Concrete Building Brick
C 59/C 59M—00 (2006)	Specification for Gypsum Casting and Molding Plaster
C 61/C 61M—00 (2006)	Specification for Gypsum Keene's Cement
C 62—*10*	Specification for Building Brick (Solid Masonry Units Made from Clay or Shale)
C 73—05	Specification for Calcium Silicate Face Brick (Sand Lime Brick)
C 79—04a	Specification for Treated Core and Nontreated Core Gypsum Sheathing Board
C 90—*09*	Specification for Load-bearing Concrete Masonry Units
C 91—05	Specification for Masonry Cement
C 94/C 94M—*10*	Specification for Ready-mixed Concrete
C 129—06	Specification for Nonload-bearing Concrete Masonry Units
C 143/C 143M—*10a*	Test Method for Slump or Hydraulic Cement Concrete
C 145—85	Specification for Solid Load-bearing Concrete Masonry Units
C 150—*09*	Specification for Portland Cement
C 199—84 (2005)	Test Method for Pier Test for Refractory Mortar
C 203—05a	Standard Test Methods for Breaking Load and Flexural Properties of Block-type Thermal Insulation
C 207—06	Specification for Hydrated Lime for Masonry Purposes
C 208—*08a*	Specification for Cellulosic Fiber Insulating Board
C 216—*10*	Specification for Facing Brick (Solid Masonry Units Made from Clay or Shale)
C 270—*10*	Specification for Mortar for Unit Masonry
C 272—01 *(2007)*	Standard Test Method for Water Absorption of Core Materials for Structural Sandwich Constructions
C 273—*07a*	Standard Test Method for Shear Properties of Sandwich Core Materials

C 315—07	Specification for Clay Flue Liners and Chimney Pots
C 406—*10*	Specifications for Roofing Slate
C 411—05	Test Method for Hot-surface Performance of High-temperature Thermal Insulation
C 475/C 475—*02(2007)*	Specification for Joint Compound and Joint Tape for Finishing Gypsum Wallboard
C 476—*10*	Specification for Grout for Masonry
C 514—04 *(2009)e1*	Specification for Nails for the Application of Gypsum Wallboard
C 552—*07*	Standard Specification for Cellular Glass Thermal Insulation
C 557—03 *(2009)e1*	Specification for Adhesives for Fastening Gypsum Wallboard to Wood Framing
C 578—*10*	Specification for Rigid, Cellular Polystyrene Thermal Insulation
C 587—04 *(2009)*	Specification for Gypsum Veneer Plaster
C 588/C 588M—*03e1*	Specification for Gypsum Base for Veneer Plasters
C 595—*10*	Specification for Blended Hydraulic Cements
C 630/C 630M—03	Specification for Water-resistant Gypsum Backing Board
C 631—*09*	Specification for Bonding Compounds for Interior Gypsum Plastering
C 645—*09a*	Specification for Nonstructural Steel Framing Members
C 652—*10*	Specification for Hollow Brick (Hollow Masonry Units Made from Clay or Shale)
C 685—*10*	Specification for Concrete Made by Volumetric Batching and Continuous Mixing
C 728—05 *(2010)*	Standard Specification for Perlite Thermal Insulation Board
C 836*/C836M-10*	Specification for High Solids Content, Cold Liquid-applied Elastomeric Waterproofing Membrane for Use with Separate Wearing Course
C 843—99 (2006)	Specification for Application of Gypsum Veneer Plaster
C 844—*10*	Specification for Application of Gypsum Base to Receive Gypsum Veneer Plaster
C 847—*10a*	Specification for Metal Lath

C 887—05 *(2010)*	Specification for Packaged, Dry, Combined Materials for Surface Bonding Mortar
C 897—05 *(2009)*	Specification for Aggregate for Job-mixed Portland Cement-based Plasters
C 920—*10*	Standard Specification for Elastomeric Joint Sealants
C 926—*06*	Specification for Application of Portland Cement-based Plaster
C 931/C 931M—04	Specification for Exterior Gypsum Soffit Board
C 933—*09*	Specification for Welded Wire Lath
C 954—*10*	Specification for Steel Drill Screws for the Application of Gypsum Panel Products or Metal Plaster Bases to Steel Studs from 0.033 in. (0.84 mm) to 0.112 in. (2.84 mm) in Thickness
C 955—*09a*	Specification for Load-bearing (Transverse and Axial) Steel Studs, Runners (Tracks), and Bracing or Bridging for Screw Application of Gypsum Panel Products and Metal Plaster Bases
C 957—*10*	Specification for High-solids Content, Cold Liquid-applied Elastomeric Waterproofing Membrane for Use with Integral Wearing Surface
C 960—04	Specification for Predecorated Gypsum Board
C 1002—*07*	Specification for Steel Drill Screws for the Application of Gypsum Panel Products or Metal Plaster Bases
C 1029—*10*	Specification for Spray-applied Rigid Cellular Polyurethane Thermal Insulation
C 1032—06	Specification for Woven Wire Plaster Base
C 1047—*10a*	Specification for Accessories for Gypsum Wallboard and Gypsum Veneer Base
C 1063—*08*	Specification for Installation of Lathing and Furring to Receive Interior and Exterior Portland Cement-based Plaster.
C 1107—*08*	Standard Specification for Packaged Dry, Hydraulic-cement Grout (Nonshrink)
C 1116—*10*	Standard Specification for Fiber-reinforced Concrete and Shotcrete
C 1167—03 *(2009)*	Specification for Clay Roof Tiles
C 1177/C 1177M—*08*	Specification for Glass Mat Gypsum Substrate for Use as Sheathing

C 1178/C 1178M—*08*	Specification for Glass Mat Water-resistant Gypsum Backing Panel
C 1186—*08*	Specification for Flat Nonasbestos Fiber Cement Sheets
C 1261—*10*	Specification for Firebox Brick for Residential Fireplaces
C 1278/C 1278M—*07a*	Specification for Fiber-reinforced Gypsum Panels
C 1283—07*a*	Practice for Installing Clay Flue Lining
C 1288—99(*2010*)	Standard Specification for Discrete Nonasbestos Fiber-cement Interior Substrate Sheets
C 1289—*10*	Standard Specification for Faced Rigid Cellular Polyisocyanurate Thermal Insulation Board
C 1325—*08b*	Standard Specification for Nonasbestos Fiber-mat Reinforced Cement Interior Substrate Sheets.
C 1328—05	Specification for Plastic (Stucco) Cement.
C *1395/C 1395M*—06a	Specification for Gypsum Ceiling Board
C 1396/C 1396M—*09a*	Specification for Gypsum Board.
C 1492—03*(2009)*	Specification for Concrete Roof Tile
C 1513—*10*	Standard Specification for Steel Tapping Screws for Cold-formed Steel Framing Connections
C 1658/C 1658M—06	Standard Specification for Glass Mat Gypsum Panels
D 41—05 *(2010)*	Specification for Asphalt Primer Used in Roofing, Dampproofing and Waterproofing
D 43—00(2006)	Specification for Coal Tar Primer Used in Roofing, Dampproofing and Waterproofing
D 225—*07*	Specification for Asphalt Shingles (Organic Felt) Surfaced with Mineral Granules
D 226*/D 226M—09*	Specification for Asphalt-saturated (Organic Felt) Used in Roofing and Waterproofing
D 227—03	Specification for Coal Tar Saturated (Organic Felt) Used in Roofing and Waterproofing
D 312—00(2006)	Specification for Asphalt Used in Roofing.
D 422—63 *(2007)*	Test Method for Particle-size Analysis of Soils
D 449—03 *(2008)*	Specification for Asphalt Used in Dampproofing and Waterproofing.
D 450—07	Specification for Coal-tar Pitch Used in Roofing, Dampproofing and Waterproofing
D 1227—95(2007)	Specification for Emulsified Asphalt Used as a Protective Coating for Roofing

D 1248—05	Specification for Polyethylene Plastics Extrusion Materials for Wire and Cable
D 1622—*08*	Standard Test Method for Apparent Density of Rigid Cellular Plastics
D 1623—*09*	Standard Test Method for Tensile and Tensile Adhesion Properties of Rigid Cellular Plastics
D 1693—*08*	Test Method for Environmental Stress-cracking of Ethylene Plastics
D 1784—*08*	Standard Specification for Rigid Poly (Vinyl Chloride) (PVC) Compounds and Chlorinated Poly (Vinyl Chloride) (CPVC) Compounds
D 1863—05	Specification for Mineral Aggregate Used in Built-up Roofs
D 1970—*09*	Specification for Self-adhering Polymer Modified Bitumen Sheet Materials Used as Steep Roofing Underlayment for Ice Dam Protection
D 2126—*09*	Standard Test Method for Response of Rigid Cellular Plastics to Thermal and Humid Aging
D 2178—04	Specification for Asphalt Glass Felt Used in Roofing and Waterproofing
D 2412—*10*	Test Method for Determination of External Loading Characteristics of Plastic Pipe by Parallel-plate Loading
D 2447—03	Specification for Polyethylene (PE) Plastic Pipe Schedules 40 and 80, Based on Outside Diameter
D 2513—*09a*	Specification for Thermoplastic Gas Pressure Pipe, Tubing and Fittings
D 2559—*10a*	Standard Specification for Adhesives for Structural Laminated Wood Products for Use Under Exterior (West Use) Exposure Conditions
D 2626—04	Specification for Asphalt-saturated and Coated Organic Felt Base Sheet Used in Roofing
D 2683—*10*	Specification for Socket-type Polyethylene Fittings for Outside Diameter-controlled Polyethylene Pipe and Tubing
D 2822—05	Specification for Asphalt Roof Cement
D 2823—05	Specification for Asphalt Roof Coatings
D 2824—06	Specification for Aluminum-pigmented Asphalt Roof Coatings, Nonfibered, Asbestos Fibered and Fibered without Asbestos

D 2837—*08*	Test Method for Obtaining Hydrostatic Design Basis for Thermoplastic Pipe Materials or Pressure Design Basis for Thermoplastic Pipe Products
D 2846/D 2846M—*09b*	Specification for Chlorinated Poly (Vinyl Chloride) (CPVC) Plastic Hot- and Cold-water Distribution Systems
D 2898—*10*	Test Methods for Accelerated Weathering of Fire-retardant-treated Wood for Fire Testing
D 3019—*08*	Specification for Lap Cement Used with Asphalt Roll Roofing, Nonfibered, Asbestos Fibered and Nonasbestos Fibered.
D 3035—*08*	Specification for Polyethylene (PE) Plastic Pipe (DR-PR) Based On Controlled Outside Diameter
D 3161—*09*	Test Method for Wind Resistance of Asphalt Shingles (Fan Induced Method)
D 3201—*08ae1*	Test Method for Hygroscopic Properties of Fire-retardant Wood and Wood-base Products
D 3309—96a (2002)	Specification for Polybutylene (PB) Plastic Hot- and Code-water Distribution System
D 3350—*10*	Specification for Polyethylene Plastic Pipe and Fitting Materials
D 3462/D 3462M—*10a*	Specification for Asphalt Shingles Made From Glass Felt and Surfaced with Mineral Granules.
D 3468—99 (2006)e01	Specification for Liquid-applied Neoprene and Chlorosulfanated Polyethylene Used in Roofing and Waterproofing
D 3679—*09a*	Specification for Rigid Poly (Vinyl Chloride) (PVC) Siding
D 3737—*09*	Practice for Establishing Allowable Properties for Structural Glued Laminated Timber (Glulam)
D 3747—79 (2007)	Specification for Emulsified Asphalt Adhesive for Adhering Roof Insulation
D 3909—97b (2004)e01	Specification for Asphalt Roll Roofing (Glass Felt) Surfaced with Mineral Granules
D 3957—*09*	Standard Practices for Establishing Stress Grades for Structural Members Used in Log Buildings
D 4022—07	Specification for Coal Tar Roof Cement, Asbestos Containing
D 4318—*10*	Test Methods for Liquid Limit, Plastic Limit and Plasticity Index of Soils

D 4434*/D 4434—09*	Specification for Poly (Vinyl Chloride) Sheet Roofing
D 4479—07	Specification for Asphalt Roof Coatings-asbestos-free
D 4586—*07*	Specification for Asphalt Roof Cement-asbestos-free
D 4601—04	Specification for Asphalt-coated Glass Fiber Base Sheet Used in Roofing
D 4637*/D 4637M—10*	Specification for EPDM Sheet Used in Single-ply Roof Membrane
D 4829—*08a*	Test Method for Expansion Index of Soils
D 4869—05e01	Specification for Asphalt-saturated (Organic Felt) Underlayment Used in Steep Slope Roofing
D 4897/*D 4897M*—01*(2009)*	Specification for Asphalt Coated Glass-fiber Venting Base Sheet Used in Roofing
D 4990—97a (2005)e01	Specification for Coal Tar Glass Felt Used in Roofing and Waterproofing
D 5019—07*a*	Specification for Reinforced Nonvulcanized Polymeric Sheet Used in Roofing Membrane
D 5055—*10*	Specification for Establishing and Monitoring Structural Capacities of Prefabricated Wood I-joists
D 5516—*09*	Test Method for Evaluating the Flexural Properties of Fire-retardant-treated Softwood Plywood Exposed to the Elevated Temperatures
D 5643—06	Specification for Coal Tar Roof Cement Asbestos-free
D 5664—*10*	Test Methods For Evaluating the Effects of Fire-retardant Treatments and Elevated Temperatures on Strength Properties of Fire-retardant-treated Lumber
D 5665—99a(2006)	Specification for Thermoplastic Fabrics Used in Cold-applied Roofing and Waterproofing
D 5726—98(2005)	Specification for Thermoplastic Fabrics Used in Hot-applied Roofing and Waterproofing
D 6083—05e01	Specification for Liquid-applied Acrylic Coating Used in Roofing
D 6162—*08*	Specification for Styrene Butadiene Styrene (SBS) Modified Bituminous Sheet Materials Using a Combination of Polyester and Glass Fiber Reinforcements

D 6163—00 *(2008)*	Specification for Styrene Butadiene Styrene (SBS) Modified Bituminous Sheet Materials Using Glass Fiber Reinforcements
D 6164—05*e1*	Specification for Styrene Butadiene Styrene (SBS) Modified Bituminous Sheet Materials Using Polyester Reinforcements
D 6222—*08*	Specification for Atactic Polypropelene (APP) Modified Bituminous Sheet Materials Using Polyester Reinforcement.
D 6223/*D 6223M*—02*(2009)*e01	Specification for Atactic Polypropelene (APP) Modified Bituminous Sheet Materials Using a Combination of Polyester and Glass Fiber Reinforcement
D 6298—05 *e1*	Specification for Fiberglass-reinforced Styrene Butadiene Styrene (SBS) Modified Bituminous Sheets with a Factory Applied Metal Surface
D 6305—*08*	Practice for Calculating Bending Strength Design Adjustment Factors for Fire-retardant-treated Plywood Roof Sheathing
D 6380—03*(2008)*	Standard Specification for Asphalt Roll Roofing (Organic Felt)
D 6694—*08*	Standard Specification Liquid-applied Silicone Coating Used in Spray Polurethane Foam Roofing
D 6754*/D 6754M—10*	Standard Specification for Ketone-ethylene-ester-based Sheet Roofing2
D 6757—07	Standard Specification for Inorganic Underlayment for Use with Steep Slope Roofing Products.
D 6841—*08*	Standard Practice for Calculating Design Value Treatment Adjustment Factors for Fire-retardant-treated Lumber
D 6878—*08e1*	Standard Specification for Thermoplastic-polyolefin-based Sheet Roofing.
D 6947—07	Standard Specification for Liquid Applied Moisture Cured Polyurethane Coating Used in Spray Polyurethane Foam Roofing System
D 7032—*10a*	Standard Specification for Establishing Perfomance Ratings for Wood-plastic Composite Deck Boards and Guardrail Systems (Guards or Handrails).
D 7158—*08d*	Standard Test Method for Wind Resistance of Sealed Asphalt Shingles (Uplift Force/ Uplift Resistance Method

E 84—*10b*	Test Method for Surface Burning Characteristics of Building Materials
E 90—04	Test Method for Laboratory Measurement of Airborne Sound Transmission Loss of Building Partitions and Elements
E 96/E 96M—05	Test Method for Water Vapor Transmission of Materials
E 108—*10a*	Test Methods for Fire Tests of Roof Coverings
E 119—*10b*	Test Methods for Fire Tests of Building Construction and Materials
E 136—*09b*	Test Method for Behavior of Materials in a Vertical Tube Furnace at 750°C
E 283—04	Test Method for Determining the Rate of Air Leakage through Exterior Windows, Curtain Walls and Doors Under Specified Pressure Differences Across the Specimen
E 330—02 *(2010)*	Test Method for Structural Performance of Exterior Windows, Curtain Walls and Doors by Uniform Static Air Pressure Difference
E 331—00 *(2009)*	Test Method for Water Penetration of Exterior Windows, Skylights, Doors and Curtain Walls by Uniform Static Air Pressure Difference
E 492—*09*	Specification for Laboratory Measurement of Impact Sound Transmission through Floor-ceiling Assemblies Using the Tapping Machine
E 814—*10*	Test Method for Fire Tests of Through-penetration Firestops
E 970—*10*	Test Method for Critical Radiant Flux of Exposed Attic Floor Insulation Using a Radiant Heat Energy Source
E 1509—04	Standard Specification for Room Heaters, Pellet Fuel-burning Type
E 1602—03*(2010)e1*	Guide for Construction of Solid Fuel Burning Masonry Heaters
E 1886—*05*	Test Method for Performance of Exterior Windows, Curtain Walls, Doors and Storm Shutters Impacted by Missles and Exposed to Cyclic Pressure Differentials
E 1996—*09*	Standard Specification for Performance of Exterior Windows, Curtain Walls, Doors and Impact

	Protective Systems Impacted by Windborne Debris in Hurricanes
E 2178—03	Standard Test Method for Air Permeance of Building Materials
E 2231—*09*	Standard Practice for Specimen Preparation and Mounting of Pipe and Duct Insulation Materials to Assess Surface Burning Characteristics
E 2273—03	Standard Test Method for Determining the Drainage Efficiency of Exterior Insulation and Finish Systems (EIFS) Clad Wall Assemblies
E 2568—*09e1*	Standard Specification for PB Exterior Insulation and Finish Systems (EIFS)
E 2570—07	Standard Test Methods for Evaluating Water-resistive Barrier (WRB) Coatings Used Under Exterior Insulation and Finish Systems (EIFS) or EIFS with Drainage
F 876—*10*	Specification for Cross-linked Polyethylene (PEX) Tubing
F 877—07	Specification for Cross-linked Polyethylene (PEX) Plastic Hot-and Cold-water Distribution Systems
F 1055—98(2006)	Specification for Electrofusion Type Polyethylene Fittings for Outside Diameter Controlled Polyethylene Pipe and Fittings
F 1281—07	Specification for Cross-linked Polyethylene/Aluminum/Cross-linked Polyethylene (PEX-AL-PEX) Pressure Pipe
F 1282—*10*	Specification for Polyethylene/Aluminum/Polyethylene (PE-AL-PE) Composite Pressure Pipe
F 1554—*07a*	Specification for Anchor Bolts, Steel, 36, 55 and 105-ksi Yield Strength
F 1667—*10*	Specification for Driven Fasteners, Nails, Spikes and Staples
F 1807—*10e1*	Specification for Metal Insert Fittings Utilizing a Copper Crimp Ring for SDR9 Cross-linked Polyethylene (PEX) Tubing
F 1960—*10*	Specification for Cold Expansion Fittings with PEX Reinforcing Rings for Use with Cross-linked Polyethylene (PEX) Tubing
F 1973—*08*	Standard Specification for Factory Assembled Anodeless Risers and Transition Fittings in

	Polyethylene (PE) and Polyamide 11 (PA 11) Fuel Gas Distribution Systems
F 2090—*10*	Specification for Window Fall Prevention Devices—with Emergency Escape (Egress) Release Mechanisms
F 2098—*08*	Standard Specification for Stainless Steel Clamps for SDR9 PEX Tubing to Metal Insert Fittings
F 2389—*10*	Standard for Pressure-rated Polypropylene (PP) Piping Systems
F 2623—*08*	Standard Specification for Polyethylene of Raised Temperature (PE-RT) SDRG Tubing

American Wood Protection Association
P.O. Box 361784
Birmingham, AL 35236-1784

AWPA Standard reference number	**Title**
C1—03	All Timber Products—Preservative Treatment by Pressure Processes
M4—06	Standard for the Care of Preservative-treated Wood Products
U1—*10*	USE CATEGORY SYSTEM: User Specification for Treated Wood Except Section 6 Commodity Specification H

Canadian General Standards Board
Place du Portage 111, 6B1 11 Laurier Street
Gatineau, Quebec, Canada KIA 1G6

CGSB Standard reference number	**Title**
37-GP—52M—(1984)	Roofing and Waterproofing Membrane, Sheet Applied, Elastomeric
37-GP—56M—(*1985*)	Membrane, Modified Bituminous, Prefabricated and Reinforced for Roofing—with December 1985 Amendment
CAN/CGSB-37.54—95	Polyvinyl Chloride Roofing and Waterproofing Membrane

Composite Panel Association
19465 Deerfield Avenue, Suite 306
Leesburg, VA 20176

CPA Standard reference number	**Title**
ANSI A135.4—04	Basic Hardboard
ANSI A135.5—04	Prefinished Hardboard Paneling
ANSI A135.6—*06*	Hardboard Siding

Consumer Product Safety Commission
4330 East West Highway
Bethesda, MD 20814-4408

CPSC Standard reference number	**Title**
16 CFR Part 1201—(1977)	Safety Standard for Architectural Glazing
16 CFR Part 1209—(1979)	Interim Safety Standard for Cellulose Insulation
16 CFR Part 1404—(1979)	Cellulose Insulation

Canadian Standards Association
5060 Spectrum Way
Mississauga, Ontario, Canada L4N 5N6

CSA Standard reference number	**Title**
CSA Requirement 3—88	Manually Operated Gas Valves for Use in House Piping Systems
CSA 8-93	Requirements for Gas Fired Log Lighters for Wood Burning Fireplaces—with Revisions through January 1999
O325—07	Construction Sheathing

O437-Series—93	Standards on OSB and Waferboard (Reaffirmed 2006)
101/I.S.2/A440—08	Specifications for Windows, Doors and Unit Skylights
CAN/CSA B137.10M—*09*	Cross-linked Polyethylene/Aluminum/Polyethylene Composite Pressure Pipe Systems

Cedar Shake & Shingle Bureau
P. O. Box 1178
Sumas, WA 98295-1178

CSSB Standard reference number	**Title**
CSSB—97	Grading and Packing Rules for Western Red Cedar Shakes and Western Red Shingles of the Cedar Shake and Shingle Bureau

Door and Access Systems Manufacturers Association International
1300 Summer Avenue
Cleveland, OH 44115-2851

DASMA Standard reference number	**Title**
108—05	Standard Method for Testing Garage Doors: Determination of Structural Performance Under Uniform Static Air Pressure Difference

United States Department of Commerce
1401 Constitution Avenue, NW
Washington, DC 20230

DOC Standard reference number	**Title**
PS 1—07	Structural Plywood

PS 2—04	Performance Standard for Wood-based Structural-use Panels
R803.2.1/ PS 20—05	American Softwood Lumber Standard

Department of Transportation
1200 New Jersey Avenue SE East Building, 2nd floor
Washington, DC 20590

DOTn Standard reference number	**Title**
49 CFR, Parts 192.281(e) & 192.283 (b)	Transportation of Natural and Other Gas by Pipeline: Minimum Federal Safety Standards

Federal Emergency Management Agency
500 C Street, SW
Washington, DC 20472

FEMA Standard reference number	**Title**
TB-2—*08*	Flood Damage-Resistant Materials Requirements
FIA-TB-11—01	Crawlspace Construction for Buildings Located in Special Flood Hazard Area

Factory Mutual Global Research Standards Laboratories
Department 1301 Atwood Avenue, P. O. Box 7500
Johnson, RI 02919

FM Standard reference number	**Title**
4450—(1989)	Approval Standard for Class 1 Insulated Steel Deck Roofs—with Supplements through July 1992
4880—(*2010*)	American National Standard for Evaluating Insulated Wall or Wall and Roof/Ceiling Assemblies, Plastic Interior Finish Materials, Plastic Exterior Building Panels,

	Wall/Ceiling Coating Systems, Interior or Exterior Finish Systems

Gypsum Association
810 First Street, Northeast, Suite 510
Washington, DC 20002-4268

GA

Standard reference number	**Title**
GA-253—07	Application of Gypsum Sheathing

Hardwood Plywood & Veneer Association
1825 Michael Faraday Drive
Reston, Virginia 20190-5350

HPVA

Standard reference number	**Title**
HP-1—*2009*	The American National Standard for Hardwood and Decorative Plywood

International Code Council, Inc.
500 New Jersey Avenue, NW 6th Floor
Washington, DC 20001

ICC

Standard reference number	**Title**
ICC/ANSI A117.1 - *09*	Accessible and Usable Buildings and Facilities
ICC 400 - *07*	Standard on the Design and Construction of Log Structures
ICC 500 - 08	ICC/NSSA Standard on the Design and Construction of Storm Shelters
ICC 600 - 08	Standard for Residential Construction in High Wind Regions
IEBC-09	International Existing Buildings Code

IECC - 09	International Energy Conservation Code *(adoption includes only section 101 of chapter 1 and chapters 2 through 6)*
IFGC - 09	International Fuel Gas Code *(including ICC Emergency Amendment changing section 406.7)*

International Organization for Standardization
1, ch. de la Voie -Creuse Case postale 56 CH-1211
Geneva 20, Switzerland

ISO

Standard reference number	**Title**
15874—*03*	Polypropylene Plastic Piping Systems for Hot and Cold Water Installations

Manufacturers Standardization Society of the Valve and Fittings Industry
127 Park Street, Northeast
Vienna, VA 22180

MSS

Standard reference number	**Title**
SP-58—*09*	Pipe Hangers and Supports—Materials, Design and Manufacture

North American Insulation Manufacturers Association
44 Canal Center Plaza, Suite 310
Alexandria, VA 22314

NAIMA

Standard reference number	**Title**
AH 116—02	Fibrous Glass Duct Construction Standards, Fifth Edition

National Concrete Masonry Association
13750 Sunrise Valley Drive
Herndon, VA 20171-4662

NCMA Standard reference number	**Title**
TR 68-A—75	Design and Construction of Plain and Reinforced Concrete Masonry and Basement and Foundation Walls

National Fire Protection Association
1 Batterymarch Park
Quincy, MA 02269

NFPA Standard reference number	**Title**
13—*10*	Installation of Sprinkler Systems *(including TIA 10-2)*
13D—*10*	Standard for the Installation of Sprinkler Systems in One- and Two-family Dwellings and Manufactured Homes *(including TIA 10-2)*
13R-10	*Standard for the Installation of Sprinkler Systems in Residential Occupancies up to and Including Four Stories in Height (including TIA 10-2)*
30-15	*Flammable and Combustible Liquids Code*
31—*11*	Installation of Oil-burning Equipment
37-10	*Standard for the Installation and Use of Stationary Combustion Engines and Gas Turbines*
58—*11*	Liquefied Petroleum Gas Code
70—*14*	National Electrical Code
72—*10*	National Fire Alarm *and Signaling* Code
85—07	Boiler and Construction Systems Hazards Code
110-10	*Standard for Emergency and Standby Power Systems*
111-10	*Standard on Stored Electrical Energy Emergency and Standby Power Systems*
211—*10*	Chimneys, Fireplaces, Vents and Solid Fuel Burning Appliances
259—*08*	Test Method for Potential Heat of Building Materials
286—06	Standard Methods of Fire Tests for Evaluating Contribution of Wall and Ceiling Interior Finish to Room Fire Growth
501—05	Standard on Manufactured Housing

853—*10*	Standard for the Installation of Stationary Fuel Cell Power Systems

National Fenestration Rating Council Inc.
8484 Georgia Avenue, Suite 320
Silver Spring, MD 20910

NFRC Standard reference number	**Title**
100—*10*	Procedure for Determining Fenestration Product U-factors
200—*10*	Procedure for Determining Fenestration Product Solar Heat Gain Coefficients and Visible Transmittance at Normal Incidence
400—*10*	Procedure for Determining Fenestration Product Air Leakage

Portland Cement Association
5420 Old Orchard Road
Skokie, IL 60077

PCA Standard reference number	**Title**
100—07	Prescriptive Design of Exterior Concrete Walls for One- and Two-family Dwellings (Pub. No. EB241)

Sheet Metal & Air Conditioning Contractors National Assoc. Inc.
4021 Lafayette Center Road
Chantilly, VA 22021

SMACNA Standard reference number	**Title**
SMACNA—03	Fibrous Glass Duct Construction Standards (2003)

The Masonry Society
3970 Broadway, Suite 201-D

Boulder, CO 80304

TMS Standard reference number	**Title**
302—07	Standard Method for Determining the Sound Transmission Class Rating for Masonry Walls
402—*08*	Building Code Requirements for Masonry Structures
602—*08*	Specification for Masonry Structures

Truss Plate Institute
583 D'Onofrio Drive, Suite 200
Madison, WI 53719

TPI Standard reference number	**Title**
TPI 1—*2007*	National Design Standard for Metal-plate-connected Wood Truss Construction

Underwriters Laboratories, Inc.
333 Pfingsten Road
Northbrook, IL 60062

UL Standard reference number	**Title**
17—*08*	Vent or Chimney Connector Dampers for Oil-fired Appliances
58—96	Steel Underground Tanks for Flammable and Combustible Liquids—with Revisions through July 1998
80—*07*	Steel Tanks for Oil-burner Fuel
103—*10*	Factory-built Chimneys for Residential Type and Building Heating Appliances
127—*08*	Factory-built Fireplaces
174—04	Household Electric Storage Tank Water Heaters—with Revisions through November 2005
181—05	Factory-made Air Ducts and Air Connectors

181A—05	Closure Systems for Use with Rigid Air Ducts and Air Connectors
181B—05	Closure Systems for Use with Flexible Air Ducts and Air Connectors
217—06	Single- and Multiple-station Smoke Alarms
263—03	Standards for Fire Test of Building Construction and Materials
325—02	Standard for Door, Drapery, Gate, Louver and Window Operations and Systems—with Revisions through February 2006
343—*08*	Pumps for Oil-burning Appliances
441—*10*	Gas Vents
508—99	Industrial Control Equipment—with Revisions through July 2005
536—97	Flexible Metallic Hose—with Revisions through June 2003
641—95	Type L, Low-temperature Venting Systems—with Revisions through August 2005
651—05	Schedule 40 and Schedule 80 Rigid PVC Conduit and Fittings
723—*08*	Standard for Test for Surface Burning Characteristics of Building Materials
726—95	Oil-fired Boiler Assemblies—with Revisions through March 2006
727—06	Oil-fired Central Furnaces
729—03	Oil-fired Floor Furnaces
730—03	Oil-fired Wall Furnaces
732—95	Oil-fired Storage Tank Water Heaters
737—*07*	Fireplaces Stoves
790—04	Standard Test Methods for Fire Tests of Roof Coverings
795—06	Commercial-industrial Gas Heating Equipment.
834—04	Heating, Water Supply and Power Boilers-Electric
896—93	Oil-burning Stoves—with Revisions through May 2004
923—*08*	Microwave Cooking Appliances-
959—01	Medium Heat Appliance Factory-built Chimneys—with Revisions through September 2006
1040—96	Fire Test of Insulated Wall Construction—with Revisions through June 2001
1256—02	Fire Test of Roof Deck Construction.
1261—01	Electric Water Heaters for Pools and Tubs—with Revisions through June 2004

1453—04	Electronic Booster and Commercial Storage Tank Water Heaters
1479—03	Fire Tests of Through-penetration Firestops
1482—*10*	Solid-fuel-type Room Heaters
1715—97	Fire Test of Interior Finish Material—with Revisions through March 2004
1738—*10*	Venting Systems for Gas-burning Appliances, Categories II, III and IV
1777—07	Standard for Chimney Liners
1995—05	Heating and Cooling Equipment.
2017—*08*	Standard for General-purpose Signaling Devices and Systems—with Revisions through June 2004
2034—08	Standard for Single- and Multiple-station Carbon Monoxide Alarms.
2158A—*10*	Outline of Investigation for Clothes Dryer Transition Duct
2200-12	*Stationary Engine Generator Assemblies*

Underwriters' Laboratories of Canada
7 Underwriters Road Toronto,
Ontario, Canada M1R 3B4

ULC Standard reference number	**Title**
CAN/ULC S 102—*10*	Standard Methods for Test for Surface Burning Characteristics of Building Materials and Assemblies

United States - Federal Trade Commission
600 Pennsylvania Avenue NW
Washington, DC 20580

US-FTC Standard reference number	**Title**
CFR Title 16 Part 460	R-value Rule

Window & Door Manufacturers Association
1400 East Touhy Avenue, Suite 470

Des Plaines, IL 60018

WDMA Standard reference number	**Title**
AAMA/WDMA/CSA 101/I.S2/A440—08	Specifications for Windows, Doors and Skylights

Effective:	1/1/2018
Five Year Review (FYR) Dates:	1/1/2018

CERTIFIED ELECTRONICALLY

Certification

12/22/2017

Date

Promulgated Under:	119.03
Statutory Authority:	3781.10(A), 4104.43(A)(1)
Rule Amplifies:	3781.01, 3781.06, 3781.10, 3781.11, 3791.04, 4740.14
Prior Effective Dates:	5/27/06, 1/1/08, 3/31/08(Emer.), 6/24/08, 1/1/09, 1/1/13, 7/1/14, 1/1/16